SDMS Document
112781

EBASCO

ARCS II PROGRAM

Remedial Planning Activities at Selected Uncontrolled Hazardous Substance Disposal Sites Within EPA Region II (NY, NJ, PR, VI)

EPA Contract 68-W8-0110

EBASCO

An ENSERCH® Engineering and Construction Company

HKR 001 1409

EPA WORK ASSIGNMENT NUMBER: 053-2PX3
EPA CONTRACT NUMBER: 68-W8-0110
EBASCO SERVICES INCORPORATED

REVISED FINAL
RISK ASSESSMENT
AND FATE AND TRANSPORT REPORT
OPERABLE UNIT 1
HOOKER CHEMICAL/RUCO POLYMER SITE
HICKSVILLE, NEW YORK

OCTOBER 1992

NOTICE

The information in this document has been funded by the United States Environmental Protection Agency (USEPA) under Contract No. 68-W8-0110 to Ebasco Services Incorporated (Ebasco). This document has been formally released by Ebasco to the USEPA. This document does not represent, however, the USEPA position or policy, and has not been formally released by the USEPA.

HKR 001 1410

EPA WORK ASSIGNMENT NUMBER 053-2PX3
EPA CONTRACT NUMBER: 68-W8-0110
EBASCO SERVICES INCORPORATED

REVISED FINAL
RISK ASSESSMENT
AND FATE AND TRANSPORT REPORT
OPERABLE UNIT 1
HOOKER CHEMICAL/RUCO POLYMER SITE
HICKSVILLE, NY

OCTOBER 1992

Prepared by:

K. Subburamu, PE
Site Manager
Ebasco Services Incorporated

Reviewed by:

Ming Kuo, PhD, PE
ARCS II Technical Support Manager
Ebasco Services Incorporated

Approved by:

Dev R. Sachdev

Dev. R. Sachdev, PhD, PE
ARCS II Program Manager
Ebasco Services Incorporated

HKR 001 1411

E1185.LYN

TABLE OF CONTENTS

HOOKER CHEMICAL/RUCO POLYMER SITE
RISK ASSESSMENT AND
FATE AND TRANSPORT REPORT

CONTENTS

	Page
LIST OF TABLES	iv
LIST OF FIGURES	vii
EXECUTIVE SUMMARY	E-1
1.0 INTRODUCTION	1-1
1.1 OVERVIEW	1-1
1.2 SITE HISTORY	1-3
1.3 ORGANIZATION OF THE REPORT	1-3
2.0 RISK ASSESSMENT METHODOLOGY	2-1
3.0 SELECTION OF INDICATOR CONTAMINANTS (CONTAMINANTS OF CONCERN)	3-1
3.1 DATABASE SELECTION	3-1
3.2 SELECTION CRITERIA	3-1
3.3 INDICATOR CONTAMINANT SELECTION SUMMARY	3-2
3.4 INDICATOR COMPOUNDS IN SITE MEDIA BY EXPOSURE PATHWAY	3-2
3.4.1 Groundwater	3-3
3.4.2 Surface Water	3-4
3.4.3 Sump Sediments	3-4
3.4.4 Surface Soil	3-5
3.4.5 Subsurface Soil	3-6
3.5 COMPARISON OF INDICATOR CHEMICAL LEVELS TO BACKGROUND	3-7
4.0 CONTAMINANT FATE AND TRANSPORT REPORT	4-1
4.1 SITE CHARACTERISTICS	4-1
4.2 ENVIRONMENTAL FATE AND TRANSPORT PROCESSES	4-3
4.2.1 Factors Affecting Environmental Fate and Transport Processes	4-3
4.2.2 Fate and Transport Data	4-5

HKR 001 1413

Page

4.3 TRANSPORT AND MECHANISMS OF MIGRATION 4-17
4.3.1 Migration of Contaminants from Potential Source Areas to Environmental Media 4-17
4.3.2 Percolation and Migration into Groundwater 4-18
4.3.3 Migration of Contaminated Groundwater Off-Site 4-21
4.3.4 Migration within Surface Runoff and Transitory Impounded Surface Water 4-22
4.3.5 Migration of Contaminants in Air 4-23

4.4 SUMMARY 4-24

5.0 IDENTIFICATION OF EXPOSURE PATHWAYS 5-1
5.1 PRESENT USE EXPOSURE PATHWAYS 5-3
5.2 FUTURE USE EXPOSURE PATHWAYS 5-3

6.0 HAZARD IDENTIFICATION 6-1
6.1 HEALTH EFFECTS CRITERIA FOR NONCARCINOGENS 6-1
6.2 HEALTH EFFECTS CRITERIA FOR POTENTIAL CARCINOGENS 6-1
6.3 TOXICOLOGICAL ASSESSMENT 6-4

7.0 HEALTH RISK CHARACTERIZATION 7-1
7.1 HEALTH-BASED APPLICABLE OR RELEVANT AND APPROPRIATE REQUIREMENTS (ARARs) 7-1
7.2 GROUNDWATER CONTAMINATION COMPARED WITH ARARs 7-2
7.3 SURFACE WATER CONTAMINATION COMPARED WITH ARARs 7-2
7.4 SOIL AND SEDIMENT TBCs 7-3
7.5 ESTIMATION OF EXPOSURE POINT CONCENTRATIONS 7-3
7.6 EXPOSURE POINT CONCENTRATION MODELING 7-4
7.7 ESTIMATION OF PATHWAY-SPECIFIC PARAMETERS 7-4
7.8 QUANTITATIVE RISK CHARACTERIZATION 7-9
7.9 RESULTS OF RISK CALCULATIONS 7-10
7.9.1 Groundwater Pathways 7-11
7.9.2 Surface Water Pathways 7-11
7.9.3 Sediment Pathways 7-12
7.9.4 Surface Soil Pathways 7-12
7.9.5 Subsurface Soil Pathways 7-14

HKR 001 1414

Page

7.10 COMBINING RISK LEVELS AND HAZARD INDEX VALUES ACROSS PATHWAYS 7-14
7.11 QUALITATIVE DISCUSSION OF RISKS NOT QUANTITATIVELY EVALUATED IN THE RISK ASSESSMENT 7-15
7.12 POTENTIAL PUBLIC WELFARE IMPACTS 7-16

8.0 UNCERTAINTY IN THE RISK ASSESSMENT 8-1
8.1 UNCERTAINTIES ASSOCIATED WITH SAMPLING AND ANALYTICAL PROCEDURES 8-1
8.2 UNCERTAINTIES ASSOCIATED WITH EXPOSURE AND INTAKE ASSESSMENT METHODS 8-2
8.3 UNCERTAINTIES ASSOCIATED WITH TOXICOLOGIC MODELS AND PARAMETER ESTIMATES 8-3

9.0 ECOLOGICAL ASSESSMENT 9-1
9.1 BACKGROUND 9-1
9.2 IMPACT CHARACTERIZATION 9-1
9.3 EXTENT OF CONTAMINATION 9-2

10.0 RISK ASSESSMENT SUMMARY 10-1
10.1 HUMAN HEALTH RISK ASSESSMENT SUMMARY 10-1
10.2 CONCLUSIONS OF ECOLOGICAL ASSESSMENT 10-2

REFERENCES R-1

APPENDICES:

A - CHEMICAL SUMMARY
B - TOXICOLOGICAL PROFILES
C - RESULTS OF RISK CALCULATIONS

HKR 001 1415

LIST OF TABLES

Number		Page
3-1	Indicator Contaminants of Potential Concern by Matrix	3-8
3-2	Toxicity Screening Analysis, Groundwater	3-12
3-3	Toxicity Screening Analysis, Surface Water	3-17
3-4	Toxicity Screening Analysis, Sediment	3-19
3-5	Toxicity Screening Analysis, Surface Soil	3-22
3-6	Toxicity Screening Analysis, Subsurface Soil	3-28
3-7	Background Soil Concentration for Inorganic Elements	3-33
4-1	Emvironmental Fate and Transport Parameters: Organics	4-27
4-2	Summary of Behavioral Charascteristics that Control Environmental Fate and Transport of Classes of Organic Compounds	4-31
4-3	Summary of Environmental Fate and Transport Parameters: Inorganic	4-32
5-1	Exposure Pathway Analysis	5-6
6-1	Toxicity Data for Noncarcinogenic and Potential Carcinogenic Effects	6-5
7-1	Chemical-Specific ARARs	7-24
7-2	Exposure Pathway-Present and Future Use Scenarios	7-26
7-3	Parameters and Assumptions to Calculate Groundwater Exposure Pathways Future Use Scenario Receptor: Residents - Adults	7-27
7-4	Parameters and Assumptions to Calculate Groundwater Exposure Pathways Future Use Scenario Receptor: Residents - Children	7-28
7-5	Parameters and Assumptions to Calculate Surface Water Exposure Pathways Present and Future Use Scenario Receptor: Site Workers	7-29

HKR 001 1416

Number		Page
7-6	Parameters and Assumptions to Calculate Surface Water Exposure Pathways Future Use Scenario Receptor: Trespassers - Children	7-30
7-7	Parameters and Assumptions to Calculate Sediment Exposure Pathways Present and Future Use Scenario Receptor: Site Workers	7-31
7-8	Parameters and Assumptions to Calculate Sediment Exposure Pathways Present and Future Use Scenario Receptor: Trespassers - Children	7-32
7-9	Parameters and Assumptions to Calculate Surface Soil Exposure Pathways Present and Future Use Scenario Receptor: Site Worker	7-33
7-10	Parameters and Assumptions to Calculate Surface Soil Exposure Pathways Present and Future Use Scenario Receptor: Trespassers - Children	7-34
7-11	Parameters and Assumptions to Calculate Surface Soil Exposure Pathways Future Use Scenario Receptor: Construction Workers	7-35
7-12	Parameters and Assumptions to Calculate Surface Soil Exposure Pathways Present and Future Use Scenario Receptor: Off-Site Residents - Adults	7-36
7-13	Parameters and Assumptions to Calculate Surface Soil Exposure Pathways Present and Future Use Scenario Receptor: Off-Site Residents - Children	7-37
7-14	Parameters and Assumptions to Calculate Subsurface Soil Exposure Pathways Future Use Scenario Receptor: Construction Workers	7-38

HKR 001 1417

Number		Page
7-15	Summary Across Exposure Pathways - Resident Adults	7-39
7-16	Summary Across Exposure Pathways - Resident Children	7-41
7-17	Summary Across Exposure Pathways - Child Trespassers	7-43
7-18	Summary Across Exposure Pathways - Site Workers	7-44
7-19	Summary Across Exposure Pathways - Construction Workers	7-45
8-1	Sources of Uncertainty in the Risk Assessment	8-5

HKR 001 1418

LIST OF FIGURES

Number		Page
1-1	Site Location Map	1-5
1-2	Site Features	1-6
4-1	Transformation Pathways for Various Chlorinated Volatile Hydrocarbons in Soil Systems	4-26
5-1	Risk Assessment Exposure Pathways	5-5
7-1	Summary of Risk Calculation Formulae	7-17
7-2	Summary of Carcinogenic Total Risk Results by Exposure Pathway	7-20
7-3	Summary of Noncarcinogenic Hazard Index Results by Exposure Pathway	7-22

HKR 001 1419

EXECUTIVE SUMMARY

HKR 001 1420

EXECUTIVE SUMMARY

RISK ASSESSMENT

The Hooker Chemical/Ruco Polymer (Hooker/Ruco) site was placed on the National Priorities List (NPL) in October 1984 as a result of volatile organic contamination, specifically vinyl chloride, being detected in off-site water supply wells and as a result of previous investigations. The site consists of 14 acres, and is an active manufacturing facility with four manufacturing plants and an office building. The rest of the property contains chemical storage tanks, recharge basins (sumps), parking areas, and small structures. The plant currently produces polyester, polyols and powder coating resins.

The historic and current manufacturing processes at the site, particularly spills and engineered plant discharges, are considered the primary source of contamination to soils, sump sediments, and groundwater on-site. Investigation of off-site groundwater contamination will be performed in a separate operable unit. Historic and current operations may also have contributed to airborne contamination from the site, but this pathway is not considered in this risk assessment. The plant began operations in 1945, manufacturing rubber latex. Plasticizers and polyvinyl chloride were made at the plant beginning in 1950 and 1956, respectively. Hooker Chemical purchased the site in 1965. PVC was produced on-site until 1975. In 1982, the operation was sold by Occidental Chemical to plant employees. Prior to 1987, there were periodic discharges of PCB Therminol near the Pilot Plant. Ruco Polymer is the current owner.

This Risk Assessment is a supplement to the Phase I Remedial Investigation/Feasibility Study (RI/FS), which was prepared by Leggette, Brashears and Graham for Occidental Chemical Corporation. It addresses potential health risks from contamination detected in on-site groundwater, sump surface water, sump sediment, and surface and subsurface soil. In general, the procedures in this risk assessment are consistent with USEPA guidelines for risk assessments, and for Superfund sites, and RI/FS activities in particular. Ebasco had previously submitted the Exposure Pathways Analysis Report for this site (April 1992).

The quantitative analysis of reasonable maximum exposures identified potential future residential groundwater use at the fenceline as the primary pathway of concern. Potential carcinogenic risks to future residents from ingestion and inhalation are caused primarily by vinyl chloride, arsenic and tetrachlorethene. Noncarcinogenic risks to future residents from groundwater ingestion are caused by the presence of antimony and arsenic.

Potential carcinogenic risks to future residents at the fenceline via the ingestion pathway are 8.84E-04 for children and 2.21E-03 for adults. Potential risks to adults via the inhalation

HKR 001 1421

pathway are 5.06E-04, and noncarcinogenic risks to future residents from groundwater ingestion are 1.02E+01 for children and 4.89E+00 for adults. Carcinogenic and noncarcinogenic risks to current residents via all pathways are below levels of concern. Risks to future construction workers and child trespassers are also within or below levels of concern. Because off-site groundwater use will be addressed in a separate operable unit, the potential risks associated with its use are excluded from this report.

Average case risks were also calculated for residential groundwater ingestion, site worker contact with surface water, and site worker incidental soil ingestion. The carcinogenic total risk for adult residents via groundwater ingestion is 8.14E-05 for the average case scenario. The noncarcinogenic Hazard Index for the adult resident groundwater ingestion pathway is 9.12E-01. The Hazard Index for the child resident groundwater ingestion pathway is 1.91. The carcinogenic total risk to site workers via soil ingestion is 2.05E-06. The noncarcinogenic results for site workers through dermal contact with surface water and ingestion soil dust are 2.06E-03 and 5.88E-03, respectively.

CONTAMINANT FATE AND TRANSPORT

The migration of contaminants to underlying soils and groundwater by the percolation of rainwater through contaminated soils is a major environmental fate and transport mechanism at the site. The soils data indicate that numerous organic contaminants have migrated to a greater extent in subsurface soil than expected based solely on physicochemical characteristics. This enhanced migration for some of the organic contaminants is speculated to be due to cosolvent effects exerted by the more mobile volatile organic contaminants. The groundwater data show that migration through soil via percolating rainwater into groundwater is especially important for the volatile organic compounds, naphthalene, phthalate esters, the pesticides Dieldrin and heptachlor epoxide, and metals, whereas for most of the PAHs and pesticides, and PCBs, this pathway is not significant, and therefore these compounds are likely to persist at their current soil location.

Upon entering groundwater, contaminants will migrate with the local groundwater flow. Although the hydrologic data indicated a shallow groundwater flow direction radiating from the northeast corner of the site to the south and a deep uniform groundwater flow across the site toward the south, the actual extent of this migration to off-site areas could not be inferred from the chemical data. However, based upon physicochemical characteristics, dissolved volatile organic compounds and metals would be expected to migrate the farthest in groundwater, while naphthalene, phthalate esters, pesticides and metals associated with fine particulates are expected to migrate with groundwater flow for only a limited distance.

HKR 001 1422

The migration of contaminants within stormwater surface runoff is a major environmental fate and transport mechanism at the site. This migration occurs in the runoff via contaminants dissolved within and/or adsorbed onto entrained soil particulates. Since most of the site's stormwater runoff is channeled to the on-site sumps (recharge basins), the sumps act as contaminant sinks where entrained particulates become incorporated into the sump sediments and/or underlying soils, and/or dissolved contaminants infiltrate the underlying soils until they are absorbed to surrounding soil particles or enter the groundwater with subsequent transport mediated by the groundwater flow. This migration pathway is especially important for volatile organic compounds, phthalate esters, pesticides, PCBs and metals.

Contaminant migration within transitory ponded stormwater is expected to occur primarily for dissolved volatile organics and metals, with only metals persisting, due to the loss of the volatile organic compounds into the atmosphere via volatilization. Although contaminant dispersion mediated via this pathway does occur, it is of minor importance due to the small areal extent of ponded areas on site and their infrequent occurrence.

The emission of volatile organic compounds into the atmosphere from contaminated on-site soils, surface runoff and transitory ponded stormwater, and their concomitant migration via the prevailing wind, would be a viable transport mechanism for the site. Although a viable and expected transport mechanism, volatile emissions from the site are insignificant based upon site air monitoring data. Similarly, the airborne entrainment of contaminated surficial soil particulates, which may be occurring on a very limited scale during dry, windy days, would be of minor importance, as shown by the on-site air monitoring results.

The pesticides and PCBs would be the most persistent contaminants of concern in on-site matrices, because of their physicochemical characteristics. Metals would also persist, until their slow dissolution in percolating rainwater reduces concentrations levels. The PAHs and phthalate esters would be moderately persistent, based upon their physicochemical properties. In contrast, the highly mobile volatile organic compounds, benzoic acid, 4-methylphenol, and n-nitrosodiphenylamine would be the least persistent in on-site matrices.

HKR 001 1423

1.0 INTRODUCTION

1.1 OVERVIEW

The Hooker Chemical/Ruco Polymer (Hooker/Ruco) site is located in Hicksville, in the Township of Oyster Bay, New York. It is an active manufacturing facility that occupies 14 acres in an area zoned for industrial and residential use. There are four manufacturing buildings and an office building on site; the remainder of the property contains chemical storage tanks, recharge basins (sumps), parking areas, and assorted small structures. The plant currently produces polyester, polyols and powder coating resins. Figures 1-1 and 1-2 show the site location and the site features, respectively.

The property was placed on the National Priorities List (NPL) in October 1984 as a result of previous state investigations and concerns over past disposal practices.

In September 1987, EPA initiated a Work Assignment under REM III (Ebasco) to draft a Work Plan for the Remedial Investigation (RI) and Feasibility Study (FS) of the site. A final draft of this document was submitted to Occidental Chemical (Hooker Chemical's current corporate entity) and Ruco Polymer on July 2, 1987. Negotiations during the ensuing months resulted in an Administrative Order on Consent between EPA and Occidental Chemical to perform the RI/FS. Occidental Chemical retained the consulting firm Leggette, Brashears, and Graham, Inc. (LBG) to perform the RI/FS. Field work was initiated in September 1989, and completed in February 1990, with Ebasco conducting the oversight for EPA. The Draft RI Report was submitted to the EPA in April of 1990.

In June 1990, Occidental prepared a Focused Feasibility Study (FFS) to address the polychlorinated biphenyl (PCB) contaminated soils around the pilot plant area on an expedited basis (Operable Unit 2), following a Risk Assessment for Operable Unit 2, which was performed by Ebasco in June of 1990. As a result of the FFS, a Record of Decision (ROD) was issued in September 1990 to address the PCB contaminated soils. Negotiations were initiated for the performance of the Remedial Design/Remedial Action (RD/RA) pursuant to a Consent Decree. These negotiations failed in June of 1991 and a Unilateral Order was issued in July 1991, requiring Occidental and Ruco Polymer to perform the RD/RA.

Remedial action for Operable Unit 2 was begun in May 1992, and was completed in early September 1992. An additional operable unit is planned, to address off-site groundwater contamination.

HKR 001 1425

The scope of work for this assignment (WA #053-2PX3, under EPA Contract #68-W8-0110) was to provide technical support to EPA as part of the RI/FS being conducted by the potentially responsible party at the Hooker/Ruco site. Specifically, Ebasco was to conduct a Risk Assessment for Operable Unit 1, and perform an independent analysis of contaminant fate and transport at the site.

This baseline Risk Assessment (RA) addresses the potential human health impacts associated with the Hooker/Ruco site. Conclusions of this Risk Assessment will be considered in the process of selecting any additional appropriate remedial actions for this site. Because the off-site operable groundwater use will be addressed in a separate operable unit, the risk associated with it was not evaluated in this RA.

The data used in this risk assessment were derived from samples taken by LBG during the RI. All data were to be validated according to USEPA Region II Criteria as specified in SOP NO. HW-2, "Evaluation of Metals Data for the Contract Laboratory Program (CLP)" for inorganic compounds and as specified in SOP No. HW-6, "CLP Organics Data Review and Preliminary Review" for organic compounds. The indicator contaminant selection process utilized analytical results from LBG groundwater, surface water, sediment, surface and subsurface soil samples taken onsite and immediately downgradient. Upon completion of the PCB remediation, the PCB levels remaining in affected soils and sediments are 10 ppm or lower. These levels were used in determining site risks. All other samples were included at their analyzed contaminant levels.

The contamination found in the Hooker/Ruco site matrices and the associated fate and transport processes are described in the RI as well as in the contaminant fate and transport report developed separately by Ebasco for EPA, and included herein as Section 4.0. Table 1-1 (see Appendix A) summarizes the compounds detected, and their respective concentration ranges in groundwater and surface water, surface and subsurface soil, and sediment.

As described in the RI, tetrachloroethylene, 1,2-dichloroethylene, bis-(2-ethylhexyl) phthalate, arsenic, and chromium are the prevalent groundwater contaminants at this site. Surface water consists of standing water in the site sumps. Three surface water samples were taken, showing bis-(2-ethylhexyl) phthalate, arsenic and chromium contamination resulting from operations on-site. Sump sediments contained volatile organics (toluene, tetrachloroethene, ethylbenzene), PCBs, including Aroclor 1248, and inorganic contamination (i.e., barium, chromium and manganese, arsenic, cadmium, nickel).

Surface soil contained 1,2-dichloroethylene, toluene, ethylbenzene, xylenes, tetrachloroethylene, carbon tetrachloride, phthalates, polyaromatic hydrocarbons (PAHs, including benzo(a)pyrene), and cadmium, copper, manganese, lead, tin and zinc. Subsurface soil borings contained

HKR 001 1426

tetrachloroethylene, 1,2-dichloroethylene, toluene, xylenes, styrene, ethylbenzene, phthalates, 1,1'-(2,2-dichloroethylidene)bis(4-chlorobenzene) (4,4-DDD), 1,1'-(2,2,2-trichloroethylidene)bis(4-chlorobenzene) (4,4-DDT), Aroclor 1248 and 1254, chloroform, and cadmium.

The migration of contaminants to underlying soil and groundwater via percolation of rainwater, enhanced by cosolvent effects from volatile organic contaminants, is a major environmental fate and transport mechanism at the site. Contaminant migration via stormwater surface runoff to site sumps is also a major transport mechanism. Potential, but less significant transport mechanisms at the site include migration from transitory ponded stormwater, emissions of volatile organic compounds to the atmosphere from on-site soils, runoff and ponded stormwater, and airborne soil contaminant transport.

1.2 SITE HISTORY

Since 1946, the site has been used for the manufacturing of plastics and polymers. Liquid wastes were discharged into on-site recharge basins until 1975. These waste streams, a large amount of which came from polyvinyl chloride (PVC) production, contained compounds such as PVC resin solids, vinyl chloride, trichloroethylene and vinyl acetate. Other compounds which have been identified from the wastewater are tetrachloroethylene, styrene, butadiene, and organic acids. In addition, oil from the pilot plant's heating system, which contained PCBs, was released at the site.

Plasticizers and PVC were made at the plant beginning in 1950 and 1956, respectively. Hooker Chemical purchased the site in 1965. PVC was produced on site until 1975. In 1982, the operation was sold by Occidental Chemical to plant employees. Prior to 1987, there were periodic discharges of PCB Therminol near the Pilot Plant. Ruco Polymer is the current owner. The historic and current manufacturing processes at the site, particularly spills and engineered plant discharges, are considered the primary source of contamination to soils, sump sediments, and groundwater on site.

1.3 ORGANIZATION OF THE REPORT

This report contains an Executive Summary and this Introduction, followed by Section 2.0, a summary of the Risk Assessment methodology; the selection of contaminants of concern is discussed in Section 3.0; the contaminant fate and transport report is included as Section 4.0; potential pathways of exposure are discussed in Section 5.0; Section 6.0 provides a summary of noncarcinogenic and carcinogenic health effects criteria. Contaminant levels detected on site as compared to applicable requirements, and exposure parameters used in this Risk Assessment are presented in Section 7.0. Section 8.0 summarizes the uncertainties inherent in the risk

HKR 001 1427

calculations and conclusions. Section 9.0 contains the ecological assessment for the site. Findings and conclusions of both the human health and ecological risk assessments are summarized in Section 10.0.

HKR 001 1428

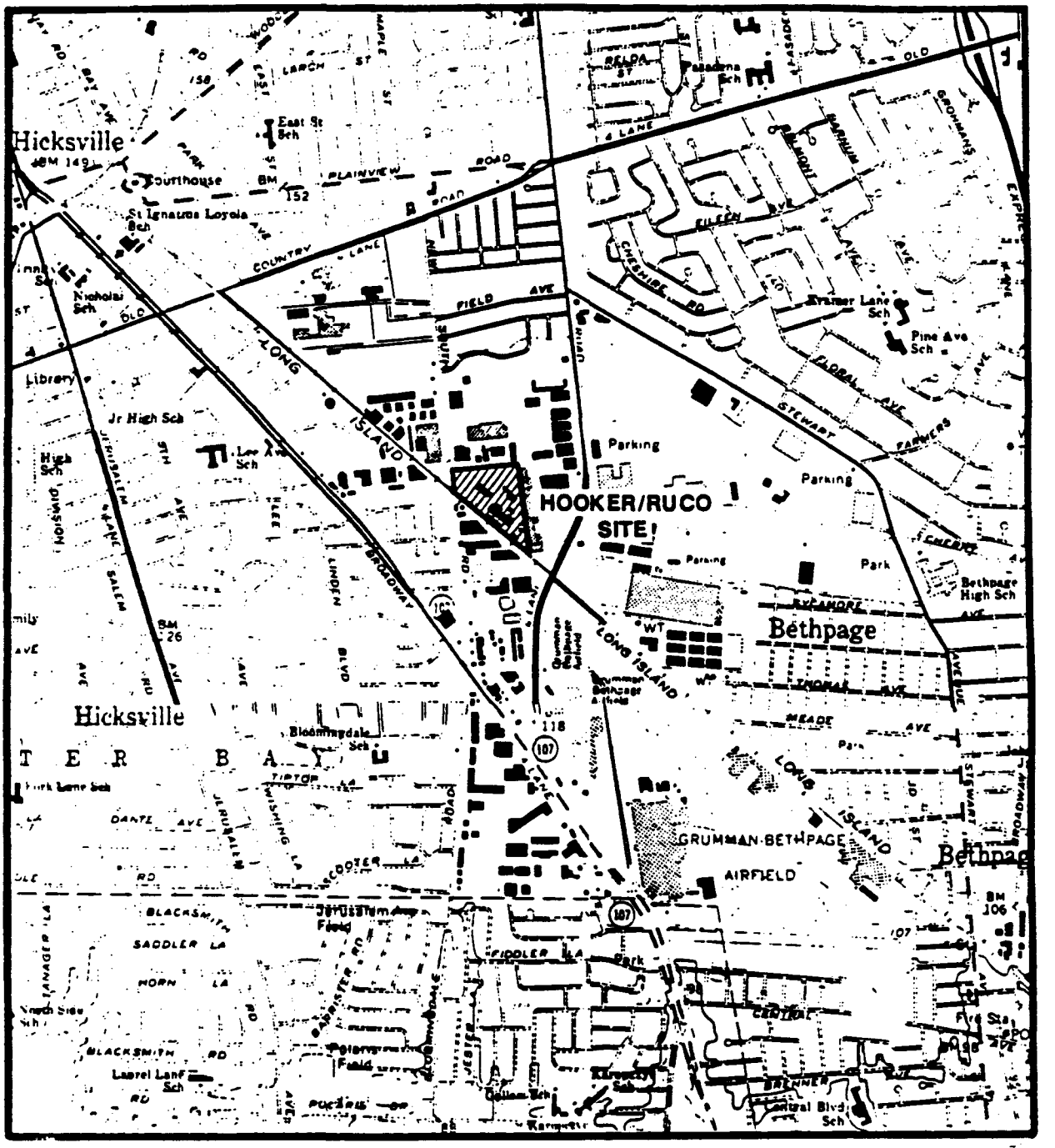

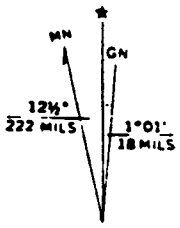

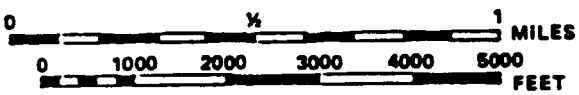

ENVIRONMENTAL PROTECTION AGENCY
HOOKER/RUCO SITE
FIGURE 1-1 SITE LOCATION MAP
EBASCO SERVICES INCORPORATED

ADAPTED FROM U.S.S.S. AMITYVILLE, FREEPORT, HUNTINGTON AND HICKSVILLE, NY, QUADRANGLES, PHOTOREVISED 1979.

HKR 001 1429

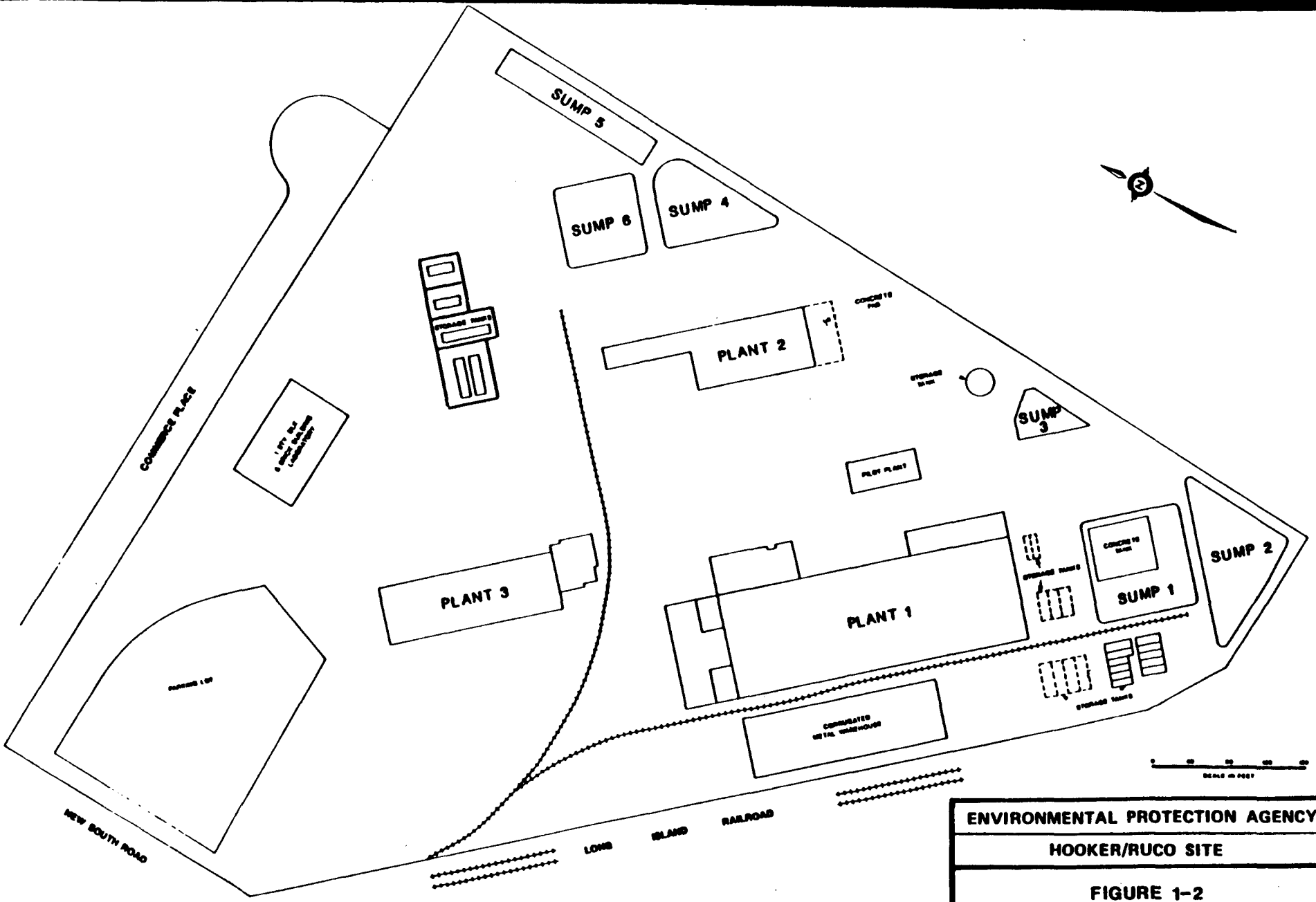

ENVIRONMENTAL PROTECTION AGENCY

HOOKER/RUCO SITE

FIGURE 1-2

SITE FEATURES

EBASCO SERVICES INCORPORATED

HKR 001 1430

2.0 RISK ASSESSMENT METHODOLOGY

Methods used in this assessment are in accordance with the USEPA "Risk Assessment Guidance for Superfund" (RAGS, 1989) document. This document presents a six-step methodology for conducting a risk assessment:

1. Identify contaminants of concern
2. Define human exposure pathways
3. Assess contaminant toxicity
4. Estimate exposure point concentrations
5. Assess human contaminant intakes
6. Characterize the human health risks

A brief summary of this methodology is presented below.

1. Identify Contaminants of Concern - Identification and selection of site-specific "indicator chemicals" present for each medium of the Hooker/Ruco site were based on:

   - frequencies of occurrence;
   - contaminant concentrations;
   - a concentration - toxicity screen;
   - historic records of site use;
   - the historic data base of contamination at the site; and
   - the toxicological, physical, and chemical characteristics of the chemicals detected.

   The selection criteria for an organic compound to be retained as an indicator chemical for quantitative evaluation were: the compound occurred in at least 5 percent of the analyses in a given medium in a single data set; the toxicity screening analysis showed that compound contributed at least 0.1 percent to the total risk; the contaminant is a Group A carcinogen or the contaminant is a carcinogen or potential carcinogen detected above 1 ug/kg (soils and sediments) or 1 ug/L (ground or surface water); the compound was detected above the applicable analytical detection limit; and toxicological data were available for the compound.

   As with organics, an inorganic compound was selected if the toxicological data were available for the compound; the compound was detected above the applicable analytical detection limit; the compound occurred at least 5 percent of the analysis in a given medium in a single data set; the toxicity screening analysis showed that the compound contributed at least 0.1 percent to the total risk; the compound is a Group A carcinogen; the compound

HKR 001 1432

is a carcinogen or potential carcinogen detected above 1 ug/l (ground and surface water) or 1 mg/kg (soils and sediments); and the compound detected in soils/sediment was above the background level. Those metals which were present only at trace levels, are naturally occurring trace nutrients, or which were present at levels far below levels of potential concern from a health standpoint were eliminated. (See Section 3.0)

2. Define Human Exposure Pathways - Prior to selecting the indicator compounds, all potential human exposure pathways for the site were defined. Each potential pathway was then evaluated considering site-specific conditions to determine if the pathway could be present at the site. The area demography and land use characteristics were taken into consideration when the pathways were developed. If a pathway could be complete, and was included in the scope of work for this risk assessment, it was retained for further quantitative or qualitative evaluation. (See Section 5.0)

3. Assess Contaminant Toxicity - All contaminants detected in site matrices were reviewed for their toxicity to humans. Data on contaminant toxicity was obtained from EPA's Integrated Risk Information System (IRIS), from the Health Effects Assessment Summary Tables (HEAST) and from the scientific literature. On the basis of these data, contaminants were separated into two groups, those exhibiting carcinogenic effects (carcinogens) and those exhibiting noncarcinogenic effects (noncarcinogens), based largely on EPA classifications (see Section 6.0). Although all contaminants were reviewed for toxicological effects, only those contaminants with EPA promulgated toxicity criteria were considered for quantitative evaluation. Those not having toxicity criteria were qualitatively evaluated.

4. Estimate Exposure Point Concentrations - Estimation of exposure point chemical concentrations were based on the 95 percent Upper Confidence Limit (UCL) on the geometric mean, or the maximum detected concentration if it was less than the 95% UCL. Use of the geometric mean is based on guidance and equations provided by USEPA Region II risk assessment staff.

5. Assess Human Contaminant Intakes - A quantitative assessment of human contaminant intakes associated with each potential exposure pathway was then developed. Human exposure levels and chronic and subchronic contaminant intakes were estimated for each contaminant and matrix through the use of exposure scenarios. Exposure scenarios are reasonable sets of human exposure pathways that help to define the intake levels of contaminants in site media. The "reasonable maximum exposure" (RME) scenario employed the exposure point concentration and reasonable maximum exposure circumstances. Development of an average case exposure scenario was not included in the scope of work for this risk assessment.

HKR 001 1433

6. Characterize Human Health Risks - The final step in this risk assessment was the health risk characterization (see Section 7.0). For noncarcinogens, exposure pathways were evaluated by comparing site-specific Chronic Daily Intake (CDI) rates to acceptable Reference Doses (RfDs) for each exposure pathway and each indicator chemical. The RfD values used were obtained from IRIS and HEAST.

Potential noncarcinogenic effects are evaluated as the ratio of the Chronic Daily Intake (CDI) to the Reference Dose (RfD). The sum of all of the CDI:RfD ratios for the selected chemicals of concern is called the Hazard Index (HI) and is calculated as shown below:

$$(1) \qquad HI = \sum_{i=1}^{n} \frac{CDI_i}{RfD_i}$$

where

HI	=	Hazard index
CDI_i	=	Chronic daily intake for chemical i (mg/kg/day),
RfD_i	=	Reference dose for chemical i (mg/kg/day), and
n	=	Number of indicator compounds (i.e. compounds of concern) in the medium under consideration.

A hazard index less than 1.0 is unlikely to be associated with health risks and is therefore less likely to be of concern than a hazard index greater than 1.0. However, a conclusion should not be categorically drawn that all hazard indices less than one are "acceptable" and all HIs greater than one indicate that health risks will occur. This is a consequence of the uncertainties inherent in the derivation of the RfD in the exposure assessment and the uncertainties associated with adding the individual terms in the hazard index calculation.

Potential excess lifetime cancer risk due to exposure to a specific carcinogenic compound is calculated by multiplying the compound specific CDI by its slope factor (SF) as follows:

$$(2) \quad \text{Excess lifetime cancer risk} = CDI \times SF$$

where

CDI = Chronic daily intake of the chemical (mg/kg/day), and
SF = Slope factor for the chemical $(mg/kg/day)^{-1}$

HKR 001 1434

This linear equation is valid for excess lifetime cancer risks less than 10^{-2} (one in one hundred). Above this level, individual excess lifetime cancer risks should be calculated using the equation:

$$(3) \quad \text{Excess lifetime cancer risk} = 1 - \exp(-CDI \times SF)$$

At cancer risk levels lower than 10^{-2}, this equation simplifies to equation number (2).

Slope Factors are defined by USEPA's Carcinogen Assessment Group (CAG) and obtained from IRIS and HEAST. For the purposes of this assessment, cancer risks for exposure to multiple carcinogenic contaminants were assumed to be additive.

A discussion of the pathways identified for evaluation as a potential health risk and the specific chemical constituents of concern within each pathway is provided in Section 7.0. Potential sources and areas of uncertainty in the risk assessment are discussed in Section 8.0.

HKR 001 435

SECTION 3.0

3.0 SELECTION OF INDICATOR CONTAMINANTS (CONTAMINANTS OF CONCERN)

3.1 DATABASE SELECTION

The scope of this risk assessment includes evaluating potential health and ecological risks resulting from chemical contamination in on-site matrices. These matrices include groundwater from monitoring wells installed as part of the RI; surface water and sediments from on-site sumps; and surface and subsurface soil. These matrices will be quantitatively evaluated for plausible exposure pathways.

RI sampling included the installation and sampling of 34 monitoring wells. Two rounds of groundwater sampling were completed. Surface and subsurface soils were also sampled during the RI. Borings were completed through the sumps and in other areas of the site. Sump surface water was sampled (total of three samples) in Sumps #3 and #4. No local background samples were taken, however local background groundwater and soil data is available. A total of 154 soil samples were collected and analyzed during the RI. They were taken in active and backfilled sumps, current and former drum storage areas, tank areas, the PCB Spill area, and at monitoring well locations. Site air sampling for specific volatile organic compounds was done at the site. Contributions to air pathway risks from current plant operations will not be analyzed in this Risk Assessment. Current operations are the likely source of any detected contaminants, and no significant levels of contaminants were detected in the single round of sampling. A soil vapor survey was also completed at 50 locations at the site. As with the other air pathway contributors, these sampling results are not included in the risk assessment. The RI addresses sample locations and the analytical data from these matrices in detail. The RI data was transmitted to Ebasco via computer files for use in this Risk Assessment and Fate and Transport Report.

3.2 SELECTION CRITERIA

The primary indicator contaminant (i.e., contaminant of concern) selection considerations were: 1) frequency of detection; 2) concentrations relative to background (when available) and analytical detection levels; 3) a concentration-toxicity screen; 4) carcinogen or potential carcinogen detections above 1 ug/kg or 1 ug/l; and 5) the availability of toxicological data. All chemicals occurring at a frequency of detection of greater than or equal to 5 percent, inorganics detected at levels above background, and contaminants having sufficient toxicological criteria, were carried through the evaluation, with the exception of inorganics which are required trace nutrients and which were found at low levels relative to toxic levels. So as not to overlook a particularly toxic compound which might occur at a low frequency, a concentration-toxicity screen was employed using the chemicals which occurred in each matrix regardless of frequency.

The concentration-toxicity screen calculated a "risk factor" for each chemical using the following equation (USEPA, 1989):

$$Rij = (Cij)(Tij)$$

where:

Rij = risk factor for chemical i in medium j;
Cij = maximum detected concentration of chemical i in medium j; and
Tij = toxicity value for ingestion for chemical i in medium j (i.e., the slope factor or 1/RfD).

The total risk factor (Rj) was calculated for each medium by summing the factors for all analytes detected in the medium and then calculating the ratio of the chemical-specific risk factor to the total risk factor (Rij/Rj). Any contaminant contributing a minimum of 0.1 percent to the total risk was retained as an indicator chemical, regardless of its frequency of occurrence. Regardless of concentrations and/or frequencies of detection, site contaminants not having toxicological indices were not included for quantitative analysis in the risk assessment.

3.3 INDICATOR CONTAMINANT SELECTION SUMMARY

On the basis of the factors described above, indicator contaminants were selected at the Hooker/Ruco Site. Indicator contaminants for this risk assessment are summarized by matrix in Table 3-1. Data for these compounds are summarized for each matrix by presenting the frequency of detection, concentration ranges, arithmetic and geometric means, and the 95% Upper Confidence limit (UCL) (see Table 1-1 in Appendix A). Results of the concentration-toxicity screen are presented by matrix in Tables 3-2 to 3-6.

3.4 INDICATOR COMPOUNDS IN SITE MEDIA BY EXPOSURE PATHWAY

Groundwater at the Hooker/Ruco site, to which the public might be exposed in the future, contains some level of contamination due to site activities and will be evaluated. Risks from off-site groundwater, which are likely more indicative of historical disposal practices and the resulting contamination levels, are to be addressed in a separate operable unit. Surface soil carcinogenic indicators for local residents, trespassers, and site workers, subsurface soil carcinogenic indicators for wastewater treatment plant construction workers, and noncarcinogenic chronic and subchronic indicators were all determined separately, as indicated below. Surface

water and sediment carcinogenic and noncarcinogenic indicators for site workers and child trespassers were also determined independently.

3.4.1 Groundwater

Ingestion

Organic compounds selected as indicator compounds for residential groundwater ingestion include Class A carcinogens benzene and vinyl chloride. Other carcinogens detected above 1 ppb or at greater than 5% frequency of detection included chloromethane, tetrachloroethene, trichloroethene, bis(2-ethylhexyl)phthalate and heptachlor epoxide. Among the metals detected during the RI, carcinogens arsenic and beryllium were chosen as groundwater ingestion indicator chemicals.

Volatile compounds chosen as chronic residential ingestion exposure indicators because of their noncarcinogenic effects were chlorobenzene, tetrachloroethene, trans-1,2-dichloroethene, 2-butanone, 4-methyl-2-pentanone, acetone, carbon disulfide, ethylbenzene and total xylenes. Bis(2-ethylhexyl)phthalate was chosen as a noncarcinogenic semivolatile indicator. Among noncarcinogenic metals detected on-site, antimony, arsenic, barium, beryllium, cadmium, chromium III & VI, manganese, nickel, selenium, silver, vanadium and zinc were chosen as groundwater ingestion indicator chemicals.

Inhalation

Groundwater inhalation indicator chemicals included two Class A carcinogens, vinyl chloride and benzene and other carcinogens chloromethane, tetrachloroethene, trichloroethene, each detected at greater than 1 ppb and/or contributing greater than 0.1% of the carcinogenic risk.

Compounds with noncarcinogenic health effects and chosen as chronic residential exposure indicators for the inhalation route of exposure include chlorobenzene, 4-methyl-2-pentanone, carbon disulfide, ethylbenzene and total xylenes.

Dermal Contact

Dermal contact indicators for groundwater included Class A carcinogens benzene, vinyl chloride and arsenic; chloromethane, tetrachloroethene, trichloroethene, heptachlor epoxide and bis(2-ethylhexyl)-phthalate, which are all organic carcinogens contributing at least 0.1% of the total risk and/or detected in greater than 1 ppb; beryllium was also dermal contact carcinogenic indicators.

Noncarcinogenic indicators for chronic residential groundwater dermal contact include volatile organics, chlorobenzene, tetrachloroethene, trans-1,2-dichloroethene, 4-methyl-2-pentanone, 2-butanone, acetone, carbon disulfide, ethylbenzene, and total xylenes; semivolatile indicator bis(2-ethylhexyl)phthalate, and one pesticide indicator, heptachlor epoxide. Inorganic indicators were antimony, arsenic, barium, beryllium, cadmium, chromium, manganese, nickel, selenium, silver, vanadium and zinc.

3.4.2 Surface Water

Dermal Contact

Surface water contaminants of concern (COCs) for the sumps include bis(2-ethylhexyl)phthalate, arsenic, beryllium and total PCBs as carcinogenic dermal contact pathway indicators; with bis(2-ethylhexyl)phthalate, arsenic, barium, beryllium, cadmium, chromium, manganese, mercury, nickel, silver, vanadium and zinc as noncarcinogenic chronic indicators for dermal contact pathway. Bis(2-ethylhexyl)phthalate, arsenic, barium, beryllium, chromium, manganese, mercury, nickel, silver, vanadium and zinc were chosen as the subchronic noncarcinogenic dermal contact pathway indicators.

3.4.3 Sump Sediments

Ingestion

Sediment ingestion indicator compounds include carcinogens tetrachloroethene, trichloroethene, styrene and PCBs. Non-carcinogenic indicators chosen were trichloroethene, trans-1,2-dichloroethene, ethyl benzene, styrene, toluene, antimony, cadmium, chromium (VI), manganese, nickel, thallium, vanadium and zinc.

Inhalation

Inhalation indicators for sumps sediments include carcinogens tetrachloroethene, trichloroethene, styrene and cadmium. Chronic and subchronic noncarcinogenic indicators included ethylbenzene, toluene.

Dermal Contact

Dermal contact indicators for sump sediments were total PCBs for carcinogenic compounds and cadmium for chronic noncarcinogenic compounds, in accordance with EPA guidance.

3.4.4 Surface Soil

Ingestion

Surface soil volatile carcinogenic indicator compounds for the ingestion pathway included the Group A carcinogens benzene and arsenic. Volatile chemicals detected above 1 ppb or at greater than 5% frequency of detection included 1,1-dichloroethene, carbon tetrachloride, chloroform, tetrachloroethene, trichloroethene and styrene. Semivolatile carcinogens (other than Class A) detected were carcinogenic PAHs, hexachlorobenzene and bis(2-ethylhexyl)phthalate. Pesticides 4,4-DDD, 4,4-DDT and heptachlor epoxide were chosen as the indicator compounds because their detected concentrations were above 1 ppb or greater than 5% occurrence. Total PCBs was selected as an indicator because it contributed more than 0.1% to the total risk.

Volatile compounds chosen as chronic residential ingestion indicators because of their noncarcinogenic effect were 1,1,1-trichloroethane, carbon tetrachloride, chlorobenzene, chloroform, tetrachloroethene, trans-1,2-dichloroethene, ethylbenzene, toluene and total xylenes. Semivolatile compounds selected as chronic ingestion indicators because the frequencies of occurrence were above 5% or the contributions to total risk were more than 0.1% were acenaphthene, anthracene, fluoranthene, fluorene, pyrene, hexachlorobenzene, and bis(2-ethylhexyl)phthalate. The pesticide indicators were 4,4-DDT and heptachlor epoxide. Noncarcinogenic chronic metals were antimony, arsenic, cadmium, mercury, nickel, selenium, silver, vanadium and zinc.

Subchronic noncarcinogenic volatile compounds chosen as ingestion indicators for construction workers were 1,1,1-trichloroethane, carbon tetrachloride, chlorobenzene, chloroform, tetrachloroethene, trans-1,2-dichloroethene, ethylbenzene, toluene and total xylenes. Anthracene, fluoranthene, fluorene, pyrene, hexachlorobenzene, bis(2-ethylhexyl)phthalate and di-n-octyl phthalate were chosen as semivolatile indicators for the subchronic ingestion pathway. The only pesticide indicator chosen was 4,4-DDT. Metal indicators were antimony, arsenic, mercury, nickel, silver, vanadium and zinc.

Inhalation

Surface soil inhalation carcinogenic indicators included Group A carcinogen benzene and arsenic, and other carcinogens such as volatile compounds 1,1-dichloroethene, carbon tetrachloride, chloroform, tetrachloroethene, trichloroethene; semivolatile indicators were carcinogenic PAHs, hexachlorobenzene; pesticides indicators were 4,4-DDT, heptachlor epoxide, and metals cadmium and nickel.

Surface soil inhalation chronic noncarcinogenic indicators included volatile compounds 1,1,1-trichloroethane, chlorobenzene, ethylbenzene, toluene and total xylenes; no semivolatiles or pesticides meet the criteria to be an indicator; the only metal indicator was mercury.

Surface soil inhalation subchronic noncarcinogenic volatile indicators were 1,1,1-trichloroethane, chlorobenzene, ethylbenzene, toluene and total xylenes; mercury was selected as metal indicator.

Dermal Contact

In accordance with EPA guidance, only cadmium, total PCBs and dioxin can be considered in soil and sediment dermal exposure pathways. In this risk assessment, cadmium was chosen as noncarcinogenic indicator for dermal contact and total PCBs was selected as a carcinogenic indicator for the dermal exposure pathway.

3.4.5 Subsurface Soil

Subsurface soil indicator compounds were selected for quantitative analysis for the subchronic construction worker exposure scenarios.

Ingestion

For the ingestion pathway Group A carcinogen chosen was benzene. The other volatile carcinogens chosen were 1,1,2,2-tetrachloroethane, 1,1-dichloroethene, bromodichloromethane, carbon tetrachloride, chloroform, tetrachloroethene, trichloroethene and styrene. Semivolatile carcinogenic indicators included carcinogenic PAHs, bis(2-ethylhexyl)phthalate, and n-nitrosodiphenylamine. Pesticide indicators included 4,4-DDD, 4,4-DDT, 4,4-DDE, alpha-chlordane, beta-BHC and heptachlor epoxide. Total PCBs was also chosen as a carcinogenic indicator.

Noncarcinogenic indicators chosen for ingestion pathway included volatiles 1,1,1-trichloroethane, carbon tetrachloride, chloroform, tetrachloroethene, trans-1,2-dichloroethene, toluene, and total xylenes. Semivolatiles included fluoranthene, pyrene, benzoic acid, bis(2-ethylhexyl)phthalate, di-n-butyl-phthalate, and di-n-octyl phthalate. Pesticide indicators chosen were 4,4-DDT and alpha-chlordane. The only metal indicator was vanadium.

Inhalation

Subsurface inhalation carcinogenic indicators include the Group A carcinogen benzene; other carcinogens 1,1,2,2-tetrachloroethane, 1,1-dichloroethene, carbon tetrachloride, chloroform,

tetrachloroethene, trichloroethene, and styrene. Carcinogenic PAHs, 4,4-DDT, heptachlor epoxide were also chosen.

Compounds selected as indicators for their potential noncarcinogenic health effects for the subsurface soil inhalation pathway included 1,1,1-trichloroethane, toluene, and total xylenes.

Dermal Contact

The only dermal contact carcinogenic indicator for subsurface soil was total PCBs.

3.5 COMPARISON OF INDICATOR CHEMICAL LEVELS TO BACKGROUND

Background organic levels were assumed to be zero in all site matrices as the majority of organic chemicals found at the site are not naturally occurring. Inorganic compounds detected in surface and subsurface soils and sediments were compared with soil background level showed in Table 3-7. The inorganic compounds detected in soils and sediments samples were eliminated if their mean concentrations were lower than background levels. The inorganic compounds with levels higher than background were kept for the further quantitative risk assessment. These are summarized in Section 7.4.

HKR 001 1443

TABLE 3-1
HOOKER/RUCO SITE
INDICATOR CONTAMINANTS OF POTENTIAL CONCERN
BY MATRIX

Chemicals	Surface Soil	Subsurface Soil	Surface Water	Ground Water	Sediments	Indicator	"NO"	"YES"
Volatiles:								
1,1,1-Trichloroethane	X	X	-	-	-	YES		8
1,1,2,2-Tetrachloroethane	-	X	-	-	-	YES		6,8
1,1-Dichloroethene	X	X	-	-	-	YES		6
2-Butanone	-	-	-	X	-	YES		7,8
4-Methyl-2-pentanone	-	-	-	X	-	YES		8
Acetone	-	-	-	X	-	YES		8
Benzene	X	X	-	X	-	YES		5,7,8
Bromodichloromethane	-	X	-	-	-	YES		6,8
Carbon Disulfide	-	X	-	X	-	YES		8
Carbon Tetrachloride	X	X	-	-	-	YES		6,8
Chlorobenzene	X	X	-	X	-	YES		7,8
Chloroform	X	X	-	-	-	YES		6,8
Chloromethane	-	-	-	X	-	YES		6,8
Ethylbenzene	X	X	-	X	X	YES		7,8
Styrene	X	X	-	-	X	YES		6,7,8
Tetrachloroethene	X	X	-	X	X	YES		6
Toluene	X	X	-	-	X	YES		8
Total Xylenes	X	X	-	X	-	YES		8
Trans-1,2-Dichloroethene	X	X	-	X	X	YES		8
Trichloroethene	X	X	-	X	X	YES		6,8
Vinyl Chloride	-	-	-	X	-	YES		5,6,7,8

X: Indicates the contaminant was detected in the matrix.
-: Indicates the contaminant was not detected in the matrix.
*: Both trivalent and hexavalent chromium are considered although justification 5, 6 and 7 refer to hexavalent chromium only.
(1): Contaminant does not contribute 0.1% to the total risk for the matrix using the toxicity screening analysis.
(2): EPA approved toxicity indices do not exist to quantitatively evaluate the contaminant.
(3): Contaminant does not exceed a 5% frequency of detection.
(4): Contaminant is not a Group A carcinogen.
(5): Contaminant is a Group A carcinogen.
(6): Contaminant is a carcinogen (or potential) with a detections above 1 ug/l (groundwater and surface water) or 1 mg/kg (subsurface soil ,surface soils and sediments-inorganic) or 1 ug/kg (surface soil , subsurface soils and sediments -organics).
(7): Contaminant contributes 0.1% or more to the total risk for the matrix using the toxicity screening analysis.
(8): Contaminant exceeds a 5% frequency of detection in one or more matrices.
(9): All Aroclor concentrations are summed and evaluated as total PCBs.
(10): Essential and nonessential elements (aluminum, calcium, magnesium, potassium, and sodium) are not evaluated.

TABLE 3-1
HOOKER/RUCO SITE
INDICATOR CONTAMINANTS OF POTENTIAL CONCERN
BY MATRIX

Chemicals	Surface Soil	Subsurface Soil	Surface Water	Ground Water	Sediments	Indicator	"NO"	"YES"
Semi-Volatiles;								
2-Methylnaphthalene	X	X	-	-	-	NO	2	
4-Methylphenol	X	-	-	-	-	NO	2	
Benzoic Acid	-	X	-	-	-	YES		8
Bis(2-ethylhexyl)phthalate	X	X	X	X	-	YES		6,7,8
Butyl benzyl phthalate	X	-	-	-	-	NO	1,3,4	
Di-n-butyl phthalate	X	X	-	X	-	YES		8
Di-n-octyl phthalate	X	X	-	X	-	YES		7,8
Hexachlorobenzene	X	-	-	-	-	YES		6,7,8
n-Nitrosodiphenylamine	-	X	-	-	-	YES		6
Phenanthrene	X	X	-	-	-	NO	2	
Phenol	X	-	-	-	-	NO	1,3,4	
Carcinogenic PAHs						YES		6,8
Benzo(a)anthracene	X	X	-	-	-			
Benzo(a)pyrene	X	X	-	-	-			
Benzo(b)Fluoranthene	X	X	-	-	-			
Benzo(k)Fluoranthene	X	X	-	-	-			
Chrysene	X	X	-	-	-			
Noncarcinogenic PAHs								
Acenaphthene	X	X	-	-	-	YES		8
Anthracene	X	X	-	-	-	YES		8
Benzo (g,h,i) perylene	X	-	-	-	-	NO	2	
Dibenzofuran	X	-	-	-	-	NO	2	
Fluoranthene	X	X	-	-	-	YES		8
Fluorene	X	-	-	-	-	YES		8
Naphthalene	X	X	-	X	-	NO	1,3,4	
Pyrene	X	X	-	-	-	YES		8

X: Indicates the contaminant was detected in the matrix.
-: Indicates the contaminant was not detected in the matrix.
*: Both trivalent and hexavalent chromium are considered although justification 5, 6 and 7 refer to hexavalent chromium only.
(1): Contaminant does not contribute 0.1% to the total risk for the matrix using the toxicity screening analysis.
(2): EPA approved toxicity indices do not exist to quantitatively evaluate the contaminant.
(3): Contaminant does not exceed a 5% frequency of detection.
(4): Contaminant is not a Group A carcinogen.
(5): Contaminant is a Group A carcinogen.
(6): Contaminant is a carcinogen (or potential) with a detections above 1 ug/l (groundwater and surface water) or 1 mg/kg (subsurface soil ,surface soils and sediments-inorganic) or 1 ug/kg (surface soil , subsurface soils and sediments -organics).
(7): Contaminant contributes 0.1% or more to the total risk for the matrix using the toxicity screening analysis.
(8): Contaminant exceeds a 5% frequency of detection in one or more matrices.
(9): All Aroclor concentrations are summed and evaluated as total PCBs.
(10): Essential and nonessential elements (aluminum, calcium, magnesium, potassium, and sodium) are not evaluated.

TABLE 3-1

HOOKER/RUCO SITE

INDICATOR CONTAMINANTS OF POTENTIAL CONCERN

BY MATRIX

Chemicals	Surface Soil	Subsurface Soil	Surface Water	Ground Water	Sediments	Indicator	"NO"	"YES"
PCBs And Pesticide:								
4,4'-DDD	X	X	-	-	-	YES		6
4,4'-DDE	-	X	-	-	-	YES		6
4,4'-DDT	X	X	-	-	-	YES		6,8
Alpha Chlordane	-	X	-	-	-	YES		6,7
Beta-BHC	-	X	-	-	-	YES		6,7,8
Dieldrin	-	-	-	X	-	NO	1,3,4	
Heptachlor Epoxide	X	X	-	X	-	YES		7,8
Total PCBs						YES		6,7,8
Aroclor 1248	X	X	X	-	X			
Aroclor 1254	X	X	-	-	-			

X: Indicates the contaminant was detected in the matrix.

-: Indicates the contaminant was not detected in the matrix.

*: Both trivalent and hexavalent chromium are considered although justification 5, 6 and 7 refer to hexavalent chromium only.

(1): Contaminant does not contribute 0.1% to the total risk for the matrix using the toxicity screening analysis.

(2): EPA approved toxicity indices do not exist to quantitatively evaluate the contaminant.

(3): Contaminant does not exceed a 5% frequency of detection.

(4): Contaminant is not a Group A carcinogen.

(5): Contaminant is a Group A carcinogen.

(6): Contaminant is a carcinogen (or potential) with a detections above 1 ug/l (groundwater and surface water) or 1 mg/kg (subsurface soil ,surface soils and sediments-inorganic) or 1 ug/kg (surface soil , subsurface soils and sediments -organics).

(7): Contaminant contributes 0.1% or more to the total risk for the matrix using the toxicity screening analysis.

(8): Contaminant exceeds a 5% frequency of detection in one or more matrices.

(9): All Aroclor concentrations are summed and evaluated as total PCBs.

(10): Essential and nonessential elements (aluminum, calcium, magnesium, potassium, and sodium) are not evaluated.

TABLE 3-1

HOOKER/RUCO SITE

INDICATOR CONTAMINANTS OF POTENTIAL CONCERN

BY MATRIX

Chemicals	Surface Soil	Subsurface Soil	Surface Water	Ground Water	Sediments	Indicator	"NO"	"YES"
Inorganics:								
Antimony	X	X	-	X	X	YES		7,8
Arsenic	X	X	X	X	X	YES		5,6,7,8
Barium	X	X	X	X	X	YES		7,8
Beryllium	X	X	X	X	-	YES		6,7,8
Cadmium	X	X	X	X	X	YES		6,7,8
Chromium *	X	X	X	X	X	YES		5,6,7,8
Cobalt	X	X	X	X	X	NO	2	
Copper	X	X	X	X	X	NO	2	
Iron	X	X	X	X	X	NO	2	
Lead	X	X	X	X	X	NO	2	
Manganese	X	X	X	X	X	YES		7,8
Mercury	X	X	X	X	-	YES		7,8
Nickel	X	X	X	X	X	YES		5,6,7,8
Selenium	X	X	-	X	-	YES		7,8
Silver	X	X	X	X	-	YES		7,8
Thallium	X	X	-	-	X	NO	1,3,4	
Vanadium	X	X	X	X	X	YES		7,8
Zinc	X	X	X	X	X	YES		7,8

X: Indicates the contaminant was detected in the matrix.

-: Indicates the contaminant was not detected in the matrix.

*: Both trivalent and hexavalent chromium are considered although justification 5, 6 and 7 refer to hexavalent chromium only.

(1): Contaminant does not contribute 0.1% to the total risk for the matrix using the toxicity screening analysis.

(2): EPA approved toxicity indices do not exist to quantitatively evaluate the contaminant.

(3): Contaminant does not exceed a 5% frequency of detection.

(4): Contaminant is not a Group A carcinogen.

(5): Contaminant is a Group A carcinogen.

(6): Contaminant is a carcinogen (or potential) with a detections above 1 ug/l (groundwater and surface water) or 1 mg/kg (subsurface soil ,surface soils and sediments-inorganic) or 1 ug/kg (surface soil , subsurface soils and sediments -organics).

(7): Contaminant contributes 0.1% or more to the total risk for the matrix using the toxicity screening analysis.

(8): Contaminant exceeds a 5% frequency of detection in one or more matrices.

(9): All Aroclor concentrations are summed and evaluated as total PCBs.

(10): Essential and nonessential elements (aluminum, calcium, magnesium, potassium, and sodium) are not evaluated.

HKR 001 1447

TABLE 3-2
HOOKER/RUCO SITE
TOXICITY-SCREENING ANALYSIS
GROUND WATER

NONCARCINOGENIC COMPOUNDS-INGESTION PATHWAY

Chemical Name	Indicator (1) >0.1%	Max. Concentration mg/L	RfDo mg/L-day	Risk Factor 1/day	Percentage of Total Risk
Chlorobenzene		6.00E-03	2.00E-02	3.00E-01	0.04%
Tetrachloroethene	Y	9.80E-02	1.00E-02	9.80E+00	1.38%
Trans-1,2-Dichloroethene	Y	5.40E-02	2.00E-02	2.70E+00	0.38%
4-Methyl-2-pentanone	Y	3.20E-01	5.00E-02	6.40E+00	0.90%
Acetone		1.00E-02	1.00E-01	1.00E-01	0.01%
2-Butanone		3.00E-03	5.00E-02	6.00E-02	0.01%
Carbon Disulfide		4.00E-03	1.00E-01	4.00E-02	0.01%
Ethylbenzene		8.00E-03	1.00E-01	8.00E-02	0.01%
Total Xylenes		1.50E-02	2.00E+00	7.50E-03	0.00%
Naphthalene		2.00E-03	4.00E-03	5.00E-01	0.07%
Bis(2-ethylhexyl)phthalate		6.00E-03	2.00E-02	3.00E-01	0.04%
Di-n-butyl phthalate		4.50E-02	1.00E-01	4.50E-01	0.06%
Di-n-octyl phthalate		2.00E-03	2.00E-02	1.00E-01	0.01%
Dieldrin		4.00E-06	5.00E-05	8.00E-02	0.01%
Heptachlor Epoxide	Y	1.50E-05	1.30E-05	1.15E+00	0.16%
Antimony	Y	6.60E-02	4.00E-04	1.65E+02	23.21%
Arsenic	Y	6.80E-02	3.00E-04	2.27E+02	31.88%
Barium	Y	1.40E-01	7.00E-02	2.00E+00	0.28%
Beryllium		2.00E-03	5.00E-03	4.00E-01	0.06%
Cadmium	Y	1.30E-01	5.00E-04	2.60E+02	36.57%
Chromium (III)		1.40E-01	1.00E+00	1.40E-01	0.02%
Chromium (VI)	Y	2.00E-02	5.00E-03	4.00E+00	0.56%
Manganese	Y	1.70E+00	1.00E-01	1.70E+01	2.39%
Mercury		2.00E-04	3.00E-04	6.67E-01	0.09%
Nickel	Y	1.50E-01	2.00E-02	7.50E+00	1.05%
Selenium	Y	4.00E-03	5.00E-03	8.00E-01	0.11%
Silver	Y	6.00E-03	3.00E-03	2.00E+00	0.28%
Vanadium	Y	1.60E-02	7.00E-03	2.29E+00	0.32%
Zinc		1.00E-01	2.00E-01	5.00E-01	0.07%
			Total Risk Factor =	7.11E+02	

HKR 001 1448

(1). Y=Compound was chosen as an indicator contaminant on the basis of the concentration-toxicity screen calculation

TABLE 3-2
HOOKER/RUCO SITE
TOXICITY-SCREENING ANALYSIS
GROUND WATER

NONCARCINOGENIC COMPOUNDS-DERMAL CONTACT PATHWAY

Chemical Name	Indicator (1) >0.1%	Max. Concentration mg/L	RfDo mg/L-day	Risk Factor 1/day	Percentage of Total Risk
Chlorobenzene		6.00E-03	2.00E-02	3.00E-01	0.04%
Tetrachloroethene	Y	9.80E-02	1.00E-02	9.80E+00	1.38%
Trans-1,2-Dichloroethene	Y	5.40E-02	2.00E-02	2.70E+00	0.38%
4-Methyl-2-pentanone	Y	3.20E-01	5.00E-02	6.40E+00	0.90%
Acetone		1.00E-02	1.00E-01	1.00E-01	0.01%
2-Butanone		3.00E-03	5.00E-02	6.00E-02	0.01%
Carbon Disulfide		4.00E-03	1.00E-01	4.00E-02	0.01%
Ethylbenzene		8.00E-03	1.00E-01	8.00E-02	0.01%
Total Xylenes		1.50E-02	2.00E+00	7.50E-03	0.00%
Naphthalene		2.00E-03	4.00E-03	5.00E-01	0.07%
Bis(2-ethylhexyl)phthalate		6.00E-03	2.00E-02	3.00E-01	0.04%
Di-n-butyl phthalate		4.50E-02	1.00E-01	4.50E-01	0.06%
Di-n-octyl phthalate		2.00E-03	2.00E-02	1.00E-01	0.01%
Dieldrin		4.00E-06	5.00E-05	8.00E-02	0.01%
Heptachlor Epoxide	Y	1.50E-05	1.30E-05	1.15E+00	0.16%
Antimony	Y	6.60E-02	4.00E-04	1.65E+02	23.21%
Arsenic	Y	6.80E-02	3.00E-04	2.27E+02	31.88%
Barium	Y	1.40E-01	7.00E-02	2.00E+00	0.28%
Beryllium		2.00E-03	5.00E-03	4.00E-01	0.06%
Cadmium	Y	1.30E-01	5.00E-04	2.60E+02	36.57%
Chromium (III)		1.40E-01	1.00E+00	1.40E-01	0.02%
Chromium (VI)	Y	2.00E-02	5.00E-03	4.00E+00	0.56%
Manganese	Y	1.70E+00	1.00E-01	1.70E+01	2.39%
Mercury		2.00E-04	3.00E-04	6.67E-01	0.09%
Nickel	Y	1.50E-01	2.00E-02	7.50E+00	1.05%
Selenium	Y	4.00E-03	5.00E-03	8.00E-01	0.11%
Silver	Y	6.00E-03	3.00E-03	2.00E+00	0.28%
Vanadium	Y	1.60E-02	7.00E-03	2.29E+00	0.32%
Zinc		1.00E-01	2.00E-01	5.00E-01	0.07%
			Total Risk Factor=	7.11E+02	

HKR 001 1449

(1). Y=Compound was chosen as an indicator contaminant on the basis of the concentration-toxicity screen calculation

TABLE 3-2

HOOKER/RUCO SITE
TOXICITY-SCREENING ANALYSIS
GROUND WATER

NONCARCINOGENIC COMPOUNDS-INHALATION PATHWAY

Chemical Name	Indicator (1) >0.1%	Max. Concentration mg/L	RfDin mg/L-day	Risk Factor 1/day	Percentage of Total Risk
Chlorobenzene	Y	6.00E-03	5.00E-03	1.20E+00	6.38%
4-Methyl-2-pentanone	Y	3.20E-01	2.00E-02	1.60E+01	85.04%
Carbon Disulfide	Y	4.00E-03	2.90E-03	1.38E+00	7.33%
Ethylbenzene	Y	8.00E-03	2.90E-01	2.76E-02	0.15%
Total Xylenes	Y	1.50E-02	8.60E-02	1.74E-01	0.93%
2-Butanone	Y	3.00E-03	9.00E-02	3.33E-02	0.18%
			Total Risk Factor =	1.88E+01	

(1). Y=Compound was chosen as an indicator contaminant on the basis of the concentration-toxicity screen calculation

HKR 001 1450

TABLE 3-2
HOOKER/RUCO SITE
TOXICITY-SCREENING ANALYSIS
GROUND WATER

CARCINOGENIC COMPOUNDS-INGESTION PATHWAY

Chemical Name	Indicator (1) >0.1%	Max. Concentration mg/L	SFo (mg/L-day)-1	Risk Factor 1/day	Percentage of Total Risk
Chloromethane		1.00E-02	1.30E-02	1.30E-04	0.01%
Tetrachloroethene	Y	9.80E-02	5.10E-02	5.00E-03	0.42%
Trichloroethene		1.80E-02	1.10E-02	1.98E-04	0.02%
Vinyl Chloride	Y	5.60E-01	1.90E+00	1.06E+00	88.85%
Benzene		1.00E-02	2.90E-02	2.90E-04	0.02%
Bis(2-ethylhexyl)phthalate		6.00E-03	1.40E-02	8.40E-05	0.01%
Dieldrin		4.00E-06	1.60E+01	6.40E-05	0.01%
Heptachlor Epoxide		1.50E-05	9.10E+00	1.37E-04	0.01%
Arsenic	Y	6.80E-02	1.75E+00	1.19E-01	9.94%
Beryllium	Y	2.00E-03	4.30E+00	8.60E-03	0.72%
			Total Risk Factor =	1.20E+00	

CARCINOGENIC COMPOUNDS-DERMAL CONTACT PATHWAY

Chemical Name	Indicator (1) >0.1%	Max. Concentration mg/L	SFo (mg/L-day)-1	Risk Factor 1/day	Percentage of Total Risk
Chloromethane		1.00E-02	1.30E-02	1.30E-04	0.01%
Tetrachloroethene	Y	9.80E-02	5.10E-02	5.00E-03	0.42%
Trichloroethene		1.80E-02	1.10E-02	1.98E-04	0.02%
Vinyl Chloride	Y	5.60E-01	1.90E+00	1.06E+00	88.85%
Benzene		1.00E-02	2.90E-02	2.90E-04	0.02%
Bis(2-ethylhexyl)phthalate		6.00E-03	1.40E-02	8.40E-05	0.01%
Dieldrin		4.00E-06	1.60E+01	6.40E-05	0.01%
Heptachlor Epoxide		1.50E-05	9.10E+00	1.37E-04	0.01%
Arsenic	Y	6.80E-02	1.75E+00	1.19E-01	9.94%
Beryllium	Y	2.00E-03	4.30E+00	8.60E-03	0.72%
			Total Risk Factor =	1.20E+00	

(1). Y=Compound was chosen as an indicator contaminant on the basis of the concentration-toxicity screen calculation

TABLE 3-2
HOOKER/RUCO SITE
TOXICITY-SCREENING ANALYSIS
GROUND WATER

CARCINOGENIC COMPOUNDS-INHALATION PATHWAY

Chemical Name	Indicator (1) >0.1%	Max. Concentration mg/L	SFin (mg/L-day)-1	Risk Factor 1/day	Percentage of Total Risk
Chloromethane		1.00E-02	6.30E-03	6.30E-05	0.04%
Tetrachloroethene	Y	9.80E-02	1.80E-03	1.76E-04	0.11%
Trichloroethene	Y	1.80E-02	1.70E-02	3.06E-04	0.19%
Vinyl Chloride	Y	5.60E-01	2.90E-01	1.62E-01	99.45%
Benzene	Y	1.00E-02	2.90E-02	2.90E-04	0.18%
Dieldrin		*4.00E-06*	1.60E+01	6.40E-05	0.04%
			Total Risk Factor =	1.63E-01	

(1). Y=Compound was chosen as an indicator contaminant on the basis of the concentration-toxicity screen calculation

HKR 001 1452

TABLE 3-3
HOOKER/RUCO SITE
TOXICITY SCREENING ANALYSIS
SURFACE WATER

NONCARCINOGENIC COMPOUNDS-DERMAL CONTACT PATHWAY

Chemical Name	Indicator (1) >0.1%	Max. Concentration mg/L	RfDo mg/L-day	Risk Factor 1/day	Percentage of Total Risk
Bis(2-ethylhexyl)phthalate	Y	3.10E-02	2.00E-02	1.55E+00	1.93%
Arsenic	Y	1.50E-02	3.00E-04	5.00E+01	62.15%
Barium	Y	1.40E-01	7.00E-02	2.00E+00	2.49%
Beryllium	Y	9.60E-04	5.00E-03	1.92E-01	0.24%
Cadmium	Y	7.00E-03	5.00E-04	1.40E+01	17.40%
Chromium (III)		2.98E-02	1.00E+00	2.98E-02	0.04%
Chromium (VI)	Y	4.25E-03	5.00E-03	8.50E-01	1.06%
Manganese	Y	2.00E-01	1.00E-01	2.00E+00	2.49%
Mercury	Y	2.40E-04	3.00E-04	8.00E-01	0.99%
Nickel	Y	2.50E-02	2.00E-02	1.25E+00	1.55%
Silver	Y	2.00E-03	3.00E-03	6.67E-01	0.83%
Vanadium	Y	3.30E-02	7.00E-03	4.71E+00	5.86%
Zinc	Y	4.80E-01	2.00E-01	2.40E+00	2.98%
			Total Risk Factor=	8.05E+01	

NONCARCINOGENIC COMPOUNDS-DERMAL CONTACT PATHWAY (Subchronic)

Chemical Name	Indicator (1) >0.1%	Max. Concentration mg/L	RfDo sub mg/L-day	Risk Factor 1/day	Percentage of Total Risk
Bis(2-ethylhexyl)phthalate	Y	3.10E-02	2.00E-02	1.55E+00	4.91%
Arsenic	Y	1.50E-02	1.00E-03	1.50E+01	47.49%
Barium	Y	1.40E-01	5.00E-02	2.80E+00	8.86%
Beryllium	Y	9.60E-04	5.00E-03	1.92E-01	0.61%
Chromium (III)		2.98E-02	1.00E+01	2.98E-03	0.01%
Chromium (VI)	Y	4.25E-03	2.00E-02	2.13E-01	0.67%
Manganese	Y	2.00E-01	1.00E-01	2.00E+00	6.33%
Mercury	Y	2.40E-04	3.00E-04	8.00E-01	2.53%
Nickel	Y	2.50E-02	2.00E-02	1.25E+00	3.96%
Silver	Y	2.00E-03	3.00E-03	6.67E-01	2.11%
Vanadium	Y	3.30E-02	7.00E-03	4.71E+00	14.92%
Zinc	Y	4.80E-01	2.00E-01	2.40E+00	7.60%
			Total Risk Factor =	3.16E+01	

(1). Y=Compound was chosen as an indicator contaminant on the basis of the concentration-toxicity screen calculation

TABLE 3-3
HOOKER/RUCO SITE
TOXICITY SCREENING ANALYSIS
SURFACE WATER

CARCINOGENIC COMPOUNDS-DERMAL CONTACT PATHWAY

Chemical Name	Indicator (1) >0.1%	Max. Concentration mg/L	SFo (mg/L-day)-1	Risk Factor 1/day	Percentage of Total Risk
Bis(2-ethylhexyl)phthalate	Y	3.10E-02	1.40E-02	4.34E-04	1.02%
Total PCBs	Y	1.50E-03	7.70E+00	1.16E-02	27.27%
Arsenic	Y	1.50E-02	1.75E+00	2.63E-02	61.97%
Beryllium	Y	9.60E-04	4.30E+00	4.13E-03	9.74%
			Total Risk Factor =	4.24E-02	

(1). Y=Compound was chosen as an indicator contaminant on the basis of the concentration-toxicity screen calculation

HKR 001 1454

TABLE 3-4
HOOKER/RUCO SITE
TOXICITY-SCREENING ANALYSIS
SEDIMENT

NONCARCINOGENIC COMPOUNDS-INGESTION PATHWAY

Chemical Name	Indicator (1) >0.1%	Max. Concentration mg/kg	RfDo mg/kg-day	Risk Factor 1/day	Percentage of Total Risk
Tetrachloroethene		6.00E-04	1.00E-02	6.00E-02	0.00%
Trans-1,2-Dichloroethene		7.60E-02	2.00E-02	3.80E+00	0.00%
Ethylbenzene		1.20E-01	1.00E-01	1.20E+00	0.00%
Styrene		6.00E-04	2.00E-01	3.00E-03	0.00%
Toluene		9.00E-03	2.00E-01	4.50E-02	0.00%
Antimony	Y	1.30E+01	4.00E-04	3.25E+04	35.70%
Arsenic	Y	7.10E+00	3.00E-04	2.37E+04	26.00%
Barium	Y	1.60E+01	7.00E-02	2.29E+02	0.25%
Cadmium	Y	9.00E+00	5.00E-04	1.80E+04	19.77%
Chromium (III)		5.51E+01	1.00E+00	5.51E+01	0.06%
Chromium (VI)	Y	7.88E+00	5.00E-03	1.58E+03	1.73%
Manganese	Y	4.20E+01	1.00E-01	4.20E+02	0.46%
Nickel	Y	6.50E+00	2.00E-02	3.25E+02	0.36%
Thallium	Y	6.00E-01	8.00E-05	7.50E+03	8.24%
Vanadium	Y	4.20E+01	7.00E-03	6.00E+03	6.59%
Zinc	Y	1.50E+02	2.00E-01	7.50E+02	0.82%
			Total Risk Factor =	9.10E+04	

NONCARCINOGENIC COMPOUNDS-INGESTION PATHWAY (Subchronic)

Chemical Name	Indicator (1) >0.1%	Max. Concentration mg/kg	RfDin mg/kg-day	Risk Factor 1/day	Percentage of Total Risk
Tetrachloroethene		6.00E-04	1.00E-01	6.00E-03	0.00%
Trans-1,2-Dichloroethene		7.60E-02	2.00E-01	3.80E-01	0.00%
Ethylbenzene		1.20E-01	1.00E+00	1.20E-01	0.00%
Styrene		6.00E-04	2.00E+00	3.00E-04	0.00%
Toluene		9.00E-03	2.00E+00	4.50E-03	0.00%
Antimony	Y	1.30E+01	4.00E-04	3.25E+04	66.77%
Arsenic	Y	7.10E+00	1.00E-03	7.10E+03	14.59%
Barium	Y	1.60E+01	5.00E-02	3.20E+02	0.66%
Chromium (III)		5.51E+01	1.00E+01	5.51E+00	0.01%
Chromium (VI)	Y	7.88E+00	2.00E-02	3.94E+02	0.81%
Manganese	Y	4.20E+01	1.00E-01	4.20E+02	0.86%
Nickel	Y	6.50E+00	2.00E-02	3.25E+02	0.67%
Thallium	Y	6.00E-01	7.00E-04	8.57E+02	1.76%
Vanadium	Y	4.20E+01	7.00E-03	6.00E+03	12.33%
Zinc	Y	1.50E+02	2.00E-01	7.50E+02	1.54%
			Total Risk Factor =	4.87E+04	

(1). Y=Compound was chosen as an indicator contaminant on the basis of the concentration-toxicity screen calculation

TABLE 3-4
HOOKER/RUCO SITE
TOXICITY-SCREENING ANALYSIS
SEDIMENT

NONCARCINOGENIC COMPOUNDS-DERMAL CONTACT PATHWAY

Chemical Name	Indicator (1) >0.1%	Max. Concentration mg/kg	RfDo mg/kg-day	Risk Factor 1/day	Percentage of Total Risk
Cadmium (2)	Y	9.00E+00	5.00E-04	1.80E+04	100.00%
			Total Risk Factor=	1.80E+04	

NONCARCINOGENIC COMPOUNDS-INHALATION PATHWAY

Chemical Name	Indicator (1) >0.1%	Max. Concentration mg/kg	RfDin mg/kg-day	Risk Factor 1/day	Percentage of Total Risk
Ethlbenzene		1.20E-01	2.90E-01	4.14E-01	0.00%
Toluene		9.00E-03	5.70E-01	1.58E-02	0.00%
Barium	Y	1.60E+01	1.00E-04	1.60E+05	29.53%
Manganese	Y	4.20E+01	1.10E-04	3.82E+05	70.47%
			Total Risk Factor =	5.42E+05	

NONCARCINOGENIC COMPOUNDS-INHALATION PATHWAY (Subchronic)

Chemical Name	Indicator (1) >0.1%	Max. Concentration mg/kg	RfDin sub mg/kg-day	Risk Factor 1/day	Percentage of Total Risk
Ethlbenzene		1.20E-01	2.90E-01	4.14E-01	0.00%
Toluene		9.00E-03	2.70E-01	3.33E-02	0.00%
Barium	Y	1.60E+01	1.00E-03	1.60E+04	4.02%
Manganese	Y	4.20E+01	1.10E-04	3.82E+05	95.98%
			Total Risk Factor=	3.98E+05	

(1). Y=Compound was chosen as an indicator contaminant on the basis of the concentration-toxicity screen calculation
(2).Onyl cadmium, total PCBs and dioxin can be considered in determing risk from soil/sediment dermal exposure pathways.

TABLE 3-4
HOOKER/RUCO SITE
TOXICITY-SCREENING ANALYSIS
SEDIMENT

CARCINOGENIC COMPOUNDS-INGESTION PATHWAY

Chemical Name		Max. Concentration mg/kg	SFo (mg/kg-day)-1	Risk Factor 1/day	Percentage of Total Risk
Tetrachloroethene		6.00E-04	5.10E-02	3.06E-05	0.00%
Trichloroethene		2.00E-03	1.10E-02	2.20E-05	0.00%
Styrene		6.00E-04	3.00E-02	1.80E-05	0.00%
Total PCBS	Y	1.00E+01	7.70E+00	7.70E+01	86.11%
Arsenic	Y	7.10E+00	1.75E+00	1.24E+01	13.89%
			Total Risk Factor =	8.94E+01	

CARCINOGENIC COMPOUNDS-DERMAL CONTACT PATHWAY

Chemical Name	Indicator (1) >0.1%	Max. Concentration mg/kg	SFo (mg/kg-day)-1	Risk Factor 1/day	Percentage of Total Risk
Total PCBs (2)	Y	1.00E+01	7.70E+00	7.70E+01	100.00%
			Total Risk Factor =	7.70E+01	

CARCINOGENIC COMPOUNDS-INHALATION PATHWAY

Chemical Name	Indicator (1) >0.1%	Max. Concentration mg/kg	SFin (mg/kg-day)-1	Risk Factor 1/day	Percentage of Total Risk
Tetrachloroethene		6.00E-04	1.80E-03	1.08E-06	0.00%
Trichloroethene		2.00E-03	1.70E-02	3.40E-05	0.00%
Strene		6.00E-04	2.00E-03	1.20E-06	0.00%
Arsenic	Y	7.10E+00	1.50E+01	1.07E+02	21.33%
Cadmium	Y	9.00E+00	6.30E+00	5.67E+01	11.35%
Chromium (VI)	Y	7.88E+00	4.20E+01	3.31E+02	66.23%
Nickel	Y	6.50E+00	8.40E-01	5.46E+00	1.09%
			Total Risk Factor =	4.99E+02	

(1). Y=Compound was chosen as an indicator contaminant on the basis of the concentration-toxicity screen calculation
(2).Onyl cadmium, total PCBs and dioxin can be considered in determing risk from soil/sediment dermal exposure pathways.

TABLE 3-5
HOOKER/RUCO SITE
TOXICITY-SCREENING ANALYSIS
SURFACE SOIL

NONCARCINOGENIC COMPOUNDS-INGESTION PATHWAY

Chemical Name	Indicator (1) >0.1%	Max. Concentration mg/kg	RfDo mg/kg-day	Risk Factor 1/day	Percentage of Total Risk
1,1,1-Trichloroethane		2.00E-03	9.00E-02	2.22E-02	0.00%
1,1-Dichloroethene		8.00E-03	9.00E-03	8.89E-01	0.00%
Carbon Tetrachloride	Y	6.80E-01	7.00E-04	9.71E+02	0.40%
Chlorobenzene		5.00E-04	2.00E-02	2.50E-02	0.00%
Chloroform		9.00E-03	1.00E-02	9.00E-01	0.00%
Tetrachloroethene		7.10E-01	1.00E-02	7.10E+01	0.03%
Trans-1,2-Dichloroethene		1.10E-02	2.00E-02	5.50E-01	0.00%
Ethylbenzene		3.90E-02	1.00E-01	3.90E-01	0.00%
Styrene		4.00E-04	2.00E-01	2.00E-03	0.00%
Toluene		1.80E+00	2.00E-01	9.00E+00	0.00%
Total Xylenes		3.10E-01	2.00E+00	1.55E-01	0.00%
Phenol		2.90E-01	6.00E-01	4.83E-01	0.00%
Acenaphthene		2.10E-01	6.00E-02	3.50E+00	0.00%
Anthracene		2.30E-01	3.00E-01	7.67E-01	0.00%
Fluoranthrene		2.40E+00	4.00E-02	6.00E+01	0.02%
Fluorene		3.20E-01	4.00E-02	8.00E+00	0.00%
Naphthalene		2.70E-01	4.00E-03	6.75E+01	0.03%
Pyrene		1.60E+00	3.00E-02	5.33E+01	0.02%
Hexachlorobenzene	Y	5.80E-01	8.00E-04	7.25E+02	0.30%
Bis(2-ethylhexyl)phthalate	Y	3.40E+01	2.00E-02	1.70E+03	0.70%
Butyl benzyl phthalate		8.00E-01	2.00E-01	4.00E+00	0.00%
Di-n-butyl phthalate		7.20E+00	1.00E-01	7.20E+01	0.03%
Di-n-octyl phthalate		4.20E+00	2.00E-02	2.10E+02	0.09%
4,4'-DDT	Y	1.90E+00	5.00E-04	3.80E+03	1.55%
Heptachlor epoxide	Y	5.80E-02	1.30E-05	4.46E+03	1.82%
Antimony	Y	3.30E+01	4.00E-04	8.25E+04	33.74%
Arsenic	Y	2.60E+01	3.00E-04	8.67E+04	35.45%
Barium	Y	1.50E+02	7.00E-02	2.14E+03	0.88%
Beryllium	Y	1.10E+01	5.00E-03	2.20E+03	0.90%
Cadmium	Y	2.30E+00	5.00E-04	4.60E+03	1.88%
Chromium (III)		7.79E+01	1.00E+00	7.79E+01	0.03%
Chromium (VI)	Y	1.11E+01	5.00E-03	2.22E+03	0.91%
Manganese	Y	3.20E+02	1.00E-01	3.20E+03	1.31%
Mercury	Y	1.80E+00	3.00E-04	6.00E+03	2.45%
Nickel	Y	4.30E+02	2.00E-02	2.15E+04	8.79%
Selenium		8.00E-01	5.00E-03	1.60E+02	0.07%
Silver	Y	2.50E+00	3.00E-03	8.33E+02	0.34%
Thallium	Y	5.00E-01	8.00E-05	6.25E+03	2.56%
Vanadium	Y	3.10E+01	7.00E-03	4.43E+03	1.81%
Zinc	Y	1.90E+03	2.00E-01	9.50E+03	3.89%
			Total Risk Factor=	2.44E+05	

(1). Y=Compound was chosen as an indicator contaminant on the basis of the concentration-toxicity screen calculation

HKR 001 1458

TABLE 3-5
HOOKER/RUCO SITE
TOXICITY-SCREENING ANALYSIS
SURFACE SOIL

NONCARCINOGENIC COMPOUNDS-DERMAL CONTACT PATHWAY

Chemical Name	Indicator (1) >0.1%	Max. Concentration mg/kg	RfDo mg/kg-day	Risk Factor 1/day	Percentage of Total Risk
Cadmium (2)	Y	2.30E+00	5.00E-04	4.60E+03	100.00%
			Total Risk Factor=	4.60E+03	

NONCARCINOGENIC COMPOUNDS-INHALATION PATHWAY

Chemical Name	Indicator (1) >0.1%	Max. Concentration mg/kg	RfDin mg/kg-day	Risk Factor 1/day	Percentage of Total Risk
1,1,1-Trichloroethane		2.00E-03	3.00E-01	6.67E-03	0.00%
Chlorobenzene		5.00E-04	5.00E-03	1.00E-01	0.00%
Ethylbenzene		3.90E-02	2.90E-01	1.34E-01	0.00%
Toluene		1.80E+00	5.70E-01	3.16E+00	0.00%
Total Xylenes		3.10E-01	8.60E-02	3.60E+00	0.00%
Barium	Y	1.50E+02	1.00E-04	1.50E+06	33.86%
Manganese	Y	3.20E+02	1.10E-04	2.91E+06	65.67%
Mercury	Y	1.80E+00	8.60E-05	2.09E+04	0.47%
			Total Risk Factor =	4.43E+06	

(1). Y=Compound was chosen as an indicator contaminant on the basis of the concentration-toxicity screen calculation
(2).Onyl cadmium, total PCBs and dioxin can be considered in determing risk from soil/sediment dermal exposure pathways.

HKR 001 1459

TABLE 3-5
HOOKER/RUCO SITE
TOXICITY-SCREENING ANALYSIS
SURFACE SOIL

NONCARCINOGENIC COMPOUNDS-INGESTION PATHWAY (Subchronic)

Chemical Name	Indicator (1) >0.1%	Max. Concentration mg/kg	RfDo sub mg/kg-day	Risk Factor 1/day	Percentage of Total Risk
1,1,1-Trichloroethane		2.00E-03	9.00E-01	2.22E-03	0.00%
1,1-Dichloroethene		8.00E-03	9.00E-03	8.89E-01	0.00%
Carbon Tetrachloride		6.80E-01	7.00E-03	9.71E+01	0.06%
Chlorobenzene		5.00E-04	2.00E-01	2.50E-03	0.00%
Chloroform		9.00E-03	1.00E+00	9.00E-03	0.00%
Tetrachloroethene		7.10E-01	1.00E-01	7.10E+00	0.00%
Trans-1,2-Dichloroethene		1.10E-02	2.00E-01	5.50E-02	0.00%
Ethylbenzene		3.90E-02	1.00E+00	3.90E-02	0.00%
Styrene		4.00E-04	2.00E+00	2.00E-04	0.00%
Toluene		1.80E+00	2.00E+00	9.00E-01	0.00%
Total Xylenes		3.10E-01	4.00E+00	7.75E-02	0.00%
Phenol		2.90E-01	6.00E-01	4.83E-01	0.00%
Acenaphthene		2.10E-01	6.00E-01	3.50E-01	0.00%
Anthracene		2.30E-01	3.00E+00	7.67E-02	0.00%
Fluoranthrene		2.40E+00	4.00E-01	6.00E+00	0.00%
Fluorene		3.20E-01	4.00E-01	8.00E-01	0.00%
Naphthalene		2.70E-01	4.00E-02	6.75E+00	0.00%
Pyrene		1.60E+00	3.00E-01	5.33E+00	0.00%
Hexachlorobenzene	Y	5.80E-01	8.00E-04	7.25E+02	0.43%
Bis(2-ethylhexyl)phthalate	Y	3.40E+01	2.00E-02	1.70E+03	1.02%
Butyl benzyl phthalate		8.00E-01	2.00E+00	4.00E-01	0.00%
Di-n-butyl phthalate		7.20E+00	1.00E+00	7.20E+00	0.00%
Di-n-octyl phthalate	Y	4.20E+00	2.00E-02	2.10E+02	0.13%
4,4'-DDT	Y	1.90E+00	5.00E-04	3.80E+03	2.27%
Heptachlor epoxide		5.80E-02	5.00E-04	1.16E+02	0.07%
Antimony	Y	3.30E+01	4.00E-04	8.25E+04	49.36%
Arsenic	Y	2.60E+01	1.00E-03	2.60E+04	15.56%
Barium	Y	1.50E+02	5.00E-02	3.00E+03	1.80%
Beryllium	Y	1.10E+01	5.00E-03	2.20E+03	1.32%
Chromium (III)		7.79E+01	1.00E+01	7.79E+00	0.00%
Chromium (VI)	Y	1.11E+01	2.00E-02	5.55E+02	0.33%
Manganese	Y	3.20E+02	1.00E-01	3.20E+03	1.91%
Mercury	Y	1.80E+00	3.00E-04	6.00E+03	3.59%
Nickel	Y	4.30E+02	2.00E-02	2.15E+04	12.86%
Silver	Y	2.50E+00	3.00E-03	8.33E+02	0.50%
Thallium	Y	5.00E-01	7.00E-04	7.14E+02	0.43%
Vanadium	Y	3.10E+01	7.00E-03	4.43E+03	2.65%
Zinc	Y	1.90E+03	2.00E-01	9.50E+03	5.68%
			Total Risk Factor =	1.67E+05	

HKR 001 1460

(1). Y=Compound was chosen as an indicator contaminant on the basis of the concentration-toxicity screen calculation

TABLE 3-5
HOOKER/RUCO SITE
TOXICITY-SCREENING ANALYSIS
SURFACE SOIL

NONCARCINOGENIC COMPOUNDS-INHALATION PATHWAY (Subchronic)

Chemical Name	Indicator (1) >0.1%	Max. Concentration mg/kg	RfDin sub mg/kg-day	Risk Factor 1/day	Percentage of Total Risk
1,1,1-Trichloroethane		2.00E-03	3.00E+00	6.67E-04	0.00%
Chlorobenzene		5.00E-04	5.00E-02	1.00E-02	0.00%
Ethylbenzene		3.90E-02	2.90E-01	1.34E-01	0.00%
Toluene		1.80E+00	2.70E-01	6.67E+00	0.00%
Total Xylenes		3.10E-01	8.60E-02	3.60E+00	0.00%
Barium	Y	1.50E+02	1.00E-03	1.50E+05	4.87%
Manganese	Y	3.20E+02	1.10E-04	2.91E+06	94.45%
Mercury	Y	1.80E+00	8.60E-05	2.09E+04	0.68%
			Total Risk Factor=	3.08E+06	

(1). Y=Compound was chosen as an indicator contaminant on the basis of the concentration-toxicity screen calculation

HKR 001 1461

TABLE 3-5
HOOKER/RUCO SITE
TOXICITY-SCREENING ANALYSIS
SURFACE SOIL

CARCINOGENIC COMPOUNDS-INGESTION PATHWAY

Chemical Name	Indicator (1) >0.1%	Max. Concentration mg/kg	SFo (mg/kg-day)-1	Risk Factor 1/day	Percentage of Total Risk
1,1-Dichloroethene		8.00E-03	6.00E-01	4.80E-03	0.00%
Carbon Tetrachloride		6.80E-01	1.30E-01	8.84E-02	0.04%
Chloroform		9.00E-03	6.10E-03	5.49E-05	0.00%
Tetrachloroethene		7.10E-01	5.10E-02	3.62E-02	0.02%
Trichloroethene		7.20E-01	1.10E-02	7.92E-03	0.00%
Benzene		1.00E-03	2.90E-02	2.90E-05	0.00%
Styrene		4.00E-04	3.00E-02	1.20E-05	0.00%
Carcinogenic PAHs	Y	5.94E+00	5.80E+00	3.45E+01	15.91%
Hexachlorobenzene	Y	5.80E-01	1.60E+00	9.28E-01	0.43%
Bis(2-ethylhexyl)phthalate	Y	3.40E+01	1.40E-02	4.76E-01	0.22%
4,4'-DDD	Y	1.40E+00	2.40E-01	3.36E-01	0.16%
4,4'-DDT	Y	1.90E+00	3.40E-01	6.46E-01	0.30%
Heptachlor epoxide	Y	5.80E-02	9.10E+00	5.28E-01	0.24%
Total PCBs	Y	1.12E+01	7.70E+00	8.62E+01	39.83%
Arsenic	Y	2.60E+01	1.75E+00	4.55E+01	21.01%
Beryllium	Y	1.10E+01	4.30E+00	4.73E+01	21.84%
			Total Risk Factor =	2.17E+02	

CARCINOGENIC COMPOUNDS-DERMAL CONTACT PATHWAY

Chemical Name	Indicator (1) >0.1%	Max. Concentration mg/kg	SFo (mg/kg-day)-1	Risk Factor 1/day	Percentage of Total Risk
Total PCBs (2)	Y	1.12E+01	7.70E+00	8.62E+01	100.00%
			Total Risk Factor =	8.62E+01	

HKR 001 1462

(1). Y=Compound was chosen as an indicator contaminant on the basis of the concentration-toxicity screen calculation
(2).Onyl cadmium, total PCBs and dioxin can be considered in determing risk from soil/sediment dermal exposure pathways.

TABLE 3-5
HOOKER/RUCO SITE
TOXICITY-SCREENING ANALYSIS
SURFACE SOIL

CARCINOGENIC COMPOUNDS-INHALATION PATHWAY

Chemical Name	Indicator (1) >0.1%	Max. Concentration mg/kg	SFin (mg/kg-day)-1	Risk Factor 1/day	Percentage of Total Risk
1,1-Dichloroethene		8.00E-03	1.20E+00	9.60E-03	0.00%
Carbon Tetrachloride		6.80E-01	5.30E-02	3.60E-02	0.00%
Chloroform		9.00E-03	8.10E-02	7.29E-04	0.00%
Tetrachloroethene		7.10E-01	1.80E-03	1.28E-03	0.00%
Trichloroethene		7.20E-01	1.70E-02	1.22E-02	0.00%
Benzene		1.00E-03	2.90E-02	2.90E-05	0.00%
Styrene		4.00E-04	2.00E-03	8.00E-07	0.00%
Carcinogenic PAHs	Y	5.94E+00	6.10E+00	3.62E+01	2.66%
Hexachlorobenzene		5.80E-01	1.60E+00	9.28E-01	0.07%
4,4'-DDT		1.90E+00	3.40E-01	6.46E-01	0.05%
Heptachlor epoxide		5.80E-02	9.10E+00	5.28E-01	0.04%
Arsenic	Y	2.60E+01	1.50E+01	3.90E+02	28.62%
Beryllium	Y	1.10E+01	8.40E+00	9.24E+01	6.78%
Cadmium	Y	2.30E+00	6.30E+00	1.45E+01	1.06%
Chromium (VI)	Y	1.11E+01	4.20E+01	4.66E+02	34.21%
Nickel	Y	4.30E+02	8.40E-01	3.61E+02	26.51%
			Total Risk Factor =	1.36E+03	

(1). Y=Compound was chosen as an indicator contaminant on the basis of the concentration-toxicity screen calculation

HKR 001 1463

TABLE 3-6
HOOKER/RUCO SITE
TOXICITY-SCREENING ANALYSIS
SUBSURFACE SOIL

NONCARCINOGENIC COMPOUNDS-INGESTION PATHWAY (Subchronic)

Chemical Name	Indicator (1) >0.1%	Max. Concentration mg/kg	RfDo sub mg/kg-day	Risk Factor 1/day	Percentage of Total Risk
1,1,1-Trichloroethane		2.00E-03	9.00E-01	2.22E-03	0.00%
1,1-Dichloroethene		1.50E-02	9.00E-03	1.67E+00	0.00%
Bromodichloromethane		3.00E-03	2.00E-02	1.50E-01	0.00%
Carbon Tetrachloride		4.00E-02	7.00E-03	5.71E+00	0.01%
Chlorobenzene		1.10E-02	2.00E-01	5.50E-02	0.00%
Chloroform		2.40E-02	1.00E+00	2.40E-02	0.00%
Tetrachloroethene		8.30E-01	1.00E-01	8.30E+00	0.01%
Trans-1,2-Dichloroethene		7.20E-01	2.00E-01	3.60E+00	0.01%
Carbon Disulfide		7.00E-03	1.00E-01	7.00E-02	0.00%
Ethylbenzene		2.00E-03	1.00E+00	2.00E-03	0.00%
Styrene		9.00E-03	2.00E+00	4.50E-03	0.00%
Toluene		1.40E+00	2.00E+00	7.00E-01	0.00%
Total Xylenes		2.80E-02	4.00E+00	7.00E-03	0.00%
Acenaphthene		1.10E-01	6.00E-01	1.83E-01	0.00%
Anthracene		1.10E-01	3.00E+00	3.67E-02	0.00%
Fluoranthrene		6.70E-01	4.00E-01	1.68E+00	0.00%
Naphthalene		1.80E-02	4.00E-02	4.50E-01	0.00%
Pyrene		6.00E-01	3.00E-01	2.00E+00	0.00%
Benzoic Acid		7.10E+00	4.00E+00	1.78E+00	0.00%
Bis(2-ethylhexyl)phthalate	Y	8.80E+01	2.00E-02	4.40E+03	7.22%
Di-n-butyl phthalate		3.00E+00	1.00E+00	3.00E+00	0.00%
Di-n-octyl Phthalate	Y	1.40E+00	2.00E-02	7.00E+01	0.11%
4,4'-DDT	Y	1.60E-01	5.00E-04	3.20E+02	0.53%
Alpha Chlordane	Y	3.90E-02	6.00E-05	6.50E+02	1.07%
Heptachlor Epoxide		1.20E-02	5.00E-04	2.40E+01	0.04%
Antimony	Y	9.00E+00	4.00E-04	2.25E+04	36.94%
Arsenic	Y	1.90E+01	1.00E-03	1.90E+04	31.19%
Barium	Y	7.00E+01	5.00E-02	1.40E+03	2.30%
Beryllium	Y	7.00E-01	5.00E-03	1.40E+02	0.23%
Chromium (III)		1.05E+02	1.00E+01	1.05E+01	0.02%
Chromium (VI)	Y	1.50E+01	2.00E-02	7.50E+02	1.23%
Manganese	Y	3.70E+02	1.00E-01	3.70E+03	6.07%
Mercury	Y	1.60E-01	3.00E-04	5.33E+02	0.88%
Nickel	Y	3.30E+01	2.00E-02	1.65E+03	2.71%
Silver	Y	2.30E+00	3.00E-03	7.67E+02	1.26%
Thallium	Y	5.00E-01	7.00E-04	7.14E+02	1.17%
Vanadium	Y	2.10E+01	7.00E-03	3.00E+03	4.93%
Zinc	Y	2.50E+02	2.00E-01	1.25E+03	2.05%
			Total Risk Factor =	6.09E+04	

(1). Y=Compound was chosen as an indicator contaminant on the basis of the concentration-toxicity screen calculation

HKR 001 1464

TABLE 3-6
HOOKER/RUCO SITE
TOXICITY-SCREENING ANALYSIS
SUBSURFACE SOIL

NONCARCINOGENIC COMPOUNDS-INHALATION PATHWAY (Subchronic)

Chemical Name	Indicator (1) >0.1%	Max. Concentration mg/kg	RfDin sub mg/kg-day	Risk Factor 1/day	Percentage of Total Risk
1,1,1-Trichloroethane		2.00E-03	3.00E+00	6.67E-04	0.00%
Chlorobenzene		1.10E-02	5.00E-02	2.20E-01	0.00%
Carbon Disulfide		7.00E-03	2.90E-03	2.41E+00	0.00%
Ethylbenzene		2.00E-03	2.90E-01	6.90E-03	0.00%
Toluene		1.40E+00	2.70E-01	5.19E+00	0.00%
Total Xylenes		2.80E-02	8.60E-02	3.26E-01	0.00%
Barium	Y	7.00E+01	1.00E-03	7.00E+04	2.04%
Manganese	Y	3.70E+02	1.10E-04	3.36E+06	97.91%
Mercury		1.60E-01	8.60E-05	1.86E+03	0.05%
			Total Risk Factor =	3.44E+06	

(1). Y=Compound was chosen as an indicator contaminant on the basis of the concentration-toxicity screen calculation

HKR 001 1465

TABLE 3-6
HOOKER/RUCO SITE
TOXICITY-SCREENING ANALYSIS
SUBSURFACE SOIL

CARCINOGENIC COMPOUNDS-INGESTION PATHWAY

Chemical Name	Indicator (1) >0.1%	Max. Concentration mg/kg	SFo (mg/kg-day)-1	Risk Factor 1/day	Percentage of Total Risk
1,1,2,2-Tetrachloroethane		1.30E-02	2.00E-01	2.60E-03	0.00%
1,1-Dichloroethene		1.50E-02	6.00E-01	9.00E-03	0.00%
Bromodichloromethane		3.00E-03	1.30E-01	3.90E-04	0.00%
Carbon Tetrachloride		4.00E-02	1.30E-01	5.20E-03	0.00%
Chloroform		2.40E-02	6.10E-03	1.46E-04	0.00%
Tetrachloroethene		8.30E-01	5.10E-02	4.23E-02	0.02%
Trichloroethene		7.60E+00	1.10E-02	8.36E-02	0.03%
Benzene		1.00E-03	2.90E-02	2.90E-05	0.00%
Styrene		9.00E-03	3.00E-02	2.70E-04	0.00%
Carcinogenic PAHs	Y	1.66E+00	5.80E+00	9.63E+00	3.66%
Bis(2-ethylhexyl)phthalate	Y	8.80E+01	1.40E-02	1.23E+00	0.47%
n-Nitrosodiphenylamine		7.10E-02	4.90E-03	3.48E-04	0.00%
4,4'-DDD		3.50E-01	2.40E-01	8.40E-02	0.03%
4,4'-DDE		4.30E-02	3.40E-01	1.46E-02	0.01%
4,4'-DDT		1.60E-01	3.40E-01	5.44E-02	0.02%
Alpha Chlordane		3.90E-02	1.30E+00	5.07E-02	0.02%
Beta-BHC	Y	2.30E-01	1.80E+00	4.14E-01	0.16%
Heptachlor Epoxide		1.20E-02	9.10E+00	1.09E-01	0.04%
Total PCBs	Y	2.79E+01	7.70E+00	2.15E+02	81.74%
Arsenic	Y	1.90E+01	1.75E+00	3.33E+01	12.65%
Beryllium	Y	7.00E-01	4.30E+00	3.01E+00	1.15%
			Total Risk Factor =	2.63E+02	

(1). Y=Compound was chosen as an indicator contaminant on the basis of the concentration-toxicity screen calculation

HKR 001 1466

TABLE 3-6
HOOKER/RUCO SITE
TOXICITY-SCREENING ANALYSIS
SUBSURFACE SOIL

CARCINOGENIC COMPOUNDS-DERMAL CONTACT PATHWAY

Chemical Name	Indicator (1) >0.1%	Max. Concentration mg/kg	SFo (mg/kg-day)-1	Risk Factor 1/day	Percentage of Total Risk
Total PCBs (2)	Y	2.79E+01	7.70E+00	2.15E+02	100.00%
			Total Risk Factor =	2.15E+02	

CARCINOGENIC COMPOUNDS-INHALATION PATHWAY

Chemical Name	Indicator (1) >0.1%	Max. Concentration mg/kg	SFin (mg/kg-day)-1	Risk Factor 1/day	Percentage of Total Risk
1,1,2,2-Tetrachloroethane		1.30E-02	2.00E-01	2.60E-03	0.00%
1,1-Dichloroethene		1.50E-02	1.20E+00	1.80E-02	0.00%
Carbon Tetrachloride		4.00E-02	1.30E-01	5.20E-03	0.00%
Chloroform		2.40E-02	8.10E-02	1.94E-03	0.00%
Tetrachloroethene		8.30E-01	1.80E-03	1.49E-03	0.00%
Trichloroethene		7.60E+00	1.70E-02	1.29E-01	0.01%
Benzene		1.00E-03	2.90E-02	2.90E-05	0.00%
Styrene		9.00E-03	2.00E-03	1.80E-05	0.00%
Carcinogenic PAHs	Y	1.66E+00	6.10E+00	1.01E+01	1.03%
4,4'-DDT		1.60E-01	3.40E-01	5.44E-02	0.01%
Alpha Chlordane		3.90E-02	1.30E+00	5.07E-02	0.01%
Beta-BHC		2.30E-01	1.80E+00	4.14E-01	0.04%
Heptachlor Epoxide		1.20E-02	9.10E+00	1.09E-01	0.01%
Arsenic	Y	1.90E+01	1.50E+01	2.85E+02	29.09%
Beryllium	Y	7.00E-01	8.40E+00	5.88E+00	0.60%
Cadmium	Y	3.20E+00	6.30E+00	2.02E+01	2.06%
Chromium (VI)	Y	1.50E+01	4.20E+01	6.30E+02	64.31%
Nickel	Y	3.30E+01	8.40E-01	2.77E+01	2.83%
			Total Risk Factor =	9.80E+02	

(1). Y=Compound was chosen as an indicator contaminant on the basis of the concentration-toxicity screen calculation
(2).Onyl cadmium, total PCBs and dioxin can be considered in determing risk from soil/sediment dermal exposure pathways.

HKR 001 1467

TABLE 3-7
HOOKER/RUCO SITE
BACKGROUND SOIL CONCENTRATION
FOR INORGANIC ELEMENTS

ELEMENT	SOILS FOR EASTERN U.S. RANGE (1) (mg/kg)	SANDY SOILS (4) RANGE (mg/kg)	MEAN (mg/kg)
Al	10000-300000	0.45-10	-
Sb	<1-500 (2)	0.05-4.0 (5)	-
As	5-15 (2)	0.1-30	5.1
Ba	100-3500	20-1500	400
Be	<1-7 (2)	1-3	1.9
Cd	0.01-7	0.07-1.1 (5)	0.5
Ca	100-400000	-	-
Cr	10-80 (2)	3-200	40
Co	<3-70 (2)	0.4-20	3.5
Cu	2-100	1-70	14
Fe	7000-550000	-	-
Pb	3-30 (2)	<10-70	17
Mg	600-6000	-	-
Mn	100-4000	7-2000	345
Hg	0.2-0.6 (2)	0.01-0.54	0.08
Ni	4-30 (2)	5-70	13
K	400-30000	-	-
Se	0.1-2	0.005-3.5	0.5
Ag	0.1-5.0	-	<5 (5)
Na	750-7500	-	-
Tl	1-2 (3)	-	-
V	20-500	7-150	4.7
Zn	10-300	10-300 (5)	50 (5)
Cn	-		-

(1): Dragun, 1988
(2): Conner, J.J and H.T. Shacklette, 1975
(3): USEPA, 1982
(4): Kabata-pendias and Pendias, 1984
(5): Brown et al (1983)

HKR 001 1468

HKR 001 1469

4.0 CONTAMINANT FATE AND TRANSPORT

An understanding of the environmental fate and the potential transport mechanisms of the contaminants present at the Hooker/Ruco site is necessary to determine the potential for continued on-site and off-site migration and to assess the potential for exposure to the contaminants.

Two major factors affecting the fate and transport of a chemical are the mobility and the persistence of the chemical in environmental media.

Mobility is the tendency of a chemical to migrate through the environment. Mobility is controlled by both the physicochemical environment at the site and the behavioral characteristics of individual chemicals. Important factors controlling the physicochemical environment of the site include the local climate, the configuration of surface water and groundwater bodies, and the nature of underlying soils and bedrock. Factors that control the behavior of individual compounds include aqueous solubility, the susceptibility of a chemical to sorption, and volatility.

Persistence is the tendency of a chemical to remain in the environment. Persistence is influenced by many of the factors affecting chemical mobility (including solubility, sorption, and volatility), but is also a function of oxidation rates, hydrolytic and photolytic reactions, and biochemical processes (such as biodegradation and bioaccumulation).

This section of the report is focused on fate and transport processes that may affect contaminants at the Hooker/Ruco site. In Section 4.1, site environmental and contaminant characteristics are summarized. Section 4.2 contains information about the behavioral characteristics of contaminants, with special attention to contaminants of concern at the Hooker/Ruco site. In Section 4.3, specific transport and migration pathways that may affect site contaminants are discussed in light of both the data collected from the site and the relevant environmental characteristics of the contaminant compounds.

4.1 SITE CHARACTERISTICS

The fate and transport of contaminants are affected by site environmental characteristics. Among the important characteristics are the local geology and soil type(s), groundwater configurations, geochemistry, hydrologic parameters, and the local climate. With the exception of geochemical attributes, environmental characteristics of the Hooker/Ruco site, such as site geology, hydrology, and climate, have been discussed in Section 3.0 of the Draft Remedial Investigation Report, April 1990. The following paragraphs summarize geochemical attributes of the site that may bear on the fate and transport of contaminants of potential concern.

HKR 001 1470

The geochemical environment of the Hooker/Ruco site (e.g., Eh-pH conditions in site waters and soil composition) will affect the fate of contaminants on the site. For example, reductive dechlorination of chlorinated (halogenated) volatile organic compounds may be a significant fate process for compounds under anaerobic conditions but, under aerobic conditions, volatilization may be a more important process.

The fate of metals in particular is strongly influenced by the geochemical environment. Potential fixation or mobility of metals in soils, for example, is greatly influenced by the pH and Eh of the aqueous phase. In addition, the toxicity of some metals (e.g., arsenic, chromium) is dependent on their oxidation state.

Site-specific data are not sufficient to characterize the geochemical environment(s) at the site with precision (e.g., Eh, individual metal ionic species, etc. were not measured); however, estimates of the range of site conditions can be made. For example, iron concentrations in site groundwaters, expressed as activity of the ions (assuming activity equals molality, i.e., the activity coefficient is unity), and pH values measured during field investigations can be superimposed on a Pe-pH diagram for dissolved iron in order to estimate Pe values. The estimated Pe values may then be used to calculate estimated values for the Eh of the water.

The reduction (redox) potential, Eh, is usually expressed as:

$$Eh = Pe\ (2.3\ RT/F)$$

Where,
- Pe = the anti-log of electron (e-) concentration
- R = the gas constant, 0.001987 Kcal/K
- T = temperature, K
- F = Faraday constant, 23.06 Kcal/Volt equivalent

At 20°C, Eh = 59.2 Pe mvolts.

The results of the calculations for groundwater at the Hooker/Ruco site based upon estimated Pe values indicate expected Eh values ranging from -0.011 to +0.663 mvolts. The range of pH values measured during the Remedial Investigation sampling was 5.22 to 7.56 standard units. Based upon these data, groundwater pH and calculated Eh values from all monitoring wells were typical of values expected in aerobic to transitional groundwater.

4.2 ENVIRONMENTAL FATE AND TRANSPORT PROCESSES

In this section, the factors affecting environmental fate and transport processes are discussed and pertinent physicochemical data for the classes of chemicals of concern at the Hooker/Ruco site are summarized. Characteristics of specific compounds are elaborated upon where available and particularly relevant; however, the discussion below is focused on the general characteristics of the classes of chemical compounds of potential concern at the Hooker/Ruco site. Chemical parameters of specific organic compounds and metals are given in Table 4-1 (organic) and Table 4-3 (inorganic) and fate and transport tendencies of the classes of organic compounds and of the metals are outlined in Table 4-2 and Table 4-3, respectively. Much of the information presented in this section has been summarized from EPA (1979) and Clement Associates (1985), to which the reader is referred for more detailed discussions of the chemical characteristics affecting the fate and transport of the contaminants of concern.

4.2.1 Factors Affecting Environmental Fate and Transport Processes

Major factors affecting environmental fate and transport of chemicals are briefly defined below:

Solubility is the measure of a chemical's ability to dissolve in water (or other media) and is expressed in units of chemical mass per unit volume of water (e.g., ug/l or mg/l). Aqueous solubility is an important determinant of chemical concentration and residence time in water. Highly soluble chemicals readily dissolve in water and remain in solution whereas chemicals having low solubility tend to be unstable in solution. In addition, solubility often predicts the ease with which chemicals are leached from wastes and soils.

Volatilization describes the movement of a chemical from the surface of a liquid or solid matrix to a gas or vapor phase. Only the neutral (uncharged) form of compounds can volatilize. Therefore, the fraction of the compound in the uncharged form should be calculated using pKa (acids) or pKb (bases) under the site pH conditions. Volatilization is calculated from the equilibrium vapor pressure which is a measure of chemical solubility in air (when the initial chemical concentration is in the liquid phase). Volatilization losses to air are correlated with chemical concentration, molecular weight, solubility and ambient temperature. Volatilization is a particularly important environmental fate process for chemicals having low aqueous solubility and polarity. Lyman et al. (1982) described compounds as readily, significantly or limitedly volatilized based on the values of their Henry's Law constants. These values in atm-m3/mol are $\geq 10^{-3}$, 10^{-3} to 10^{-5} and $< 10^{-5}$, respectively.

Sorption (adsorption/desorption) is the reversible binding of a chemical to a solid matrix. Both soluble nonpolar and insoluble chemicals usually adsorb strongly to sediments, suspended solids

and soils. Sorption of these compounds limits the fraction available for other fate processes such as volatilization and hydrolysis. Partition coefficients, which are important measures of sorptive characteristics, define the relative concentration of a given chemical in two phases or matrices.

Partition coefficients are expressed as concentration ratios; higher values indicate a greater tendency to associate with the non-aqueous phase. Partition coefficients useful in describing the environmental behavior of a compound include K_{ow}, K_d and K_{oc} and are defined:

K_{ow}: The octanol-water partition coefficient is the ratio of chemical concentration in octanol (organic solvent) to that in water at steady state conditions.

K_d: Ratio of chemical concentration in aqueous and solid phases at steady state conditions (usually applied to inorganic species).

K_{oc}: The organic carbon partition coefficient is the K_d normalized to the concentration of organic carbon in the solid phase. High K_{oc} values usually indicate a high tendency of a compound to sorb to organic matter in soils or sediments.

Bioaccumulation is the accumulation and transport of a chemical through the food chain. The potential for bioaccumulation may be quantified by equilibrium bioconcentration factors (BCFs), which define the ratio of a chemical concentration in animal or plant tissue to the concentrations of the same chemical in the environmental media of contact. Organic chemicals with high BCFs (such as pesticides) are typically insoluble and lipophilic (non-polar) and, thus, tend to reside in animal fat tissue. Some heavy metals (notably mercury) may also bioaccumulate. Literature values of BCFs most commonly pertain to fish species.

Biotransformation/biodegradation is the metabolic transformation of complex molecules into other compounds by microorganisms. Products of biotransformation/ biodegradation may or may not be toxic to other organisms and these products may undergo further biotransformation/ biodegradation. Biological transformation includes a variety of enzyme-catalyzed reactions such as oxidation and reduction.

Hydrolysis is the reaction of a chemical with water or with hydrogen (H+) or hydroxyl (OH-) ions. These components of water interact with or attack sites of a chemical resulting in subsequent breakdown or modification in the environment. The extent of chemical hydrolytic reactivity depends on both pH (acidity/alkalinity) and the molecular structure of the specific chemical.

Photolysis is a chemical decomposition process induced by radiant energy (sunlight). The rate of loss of a chemical from photochemical reactions depends on both its molecular structure and the proximity and character of the light source.

Oxidation is a chemical reaction which involves the removal of electrons from an element or compound. Conversely, electrons are added to chemical substrates in reduction reactions. Both oxidation and reduction reactions are environmentally significant in that they influence the mobility and fate of chemicals in environmental matrices. Oxidized and reduced forms of the same element or compound may also have totally different chemical, ecological and toxicological properties. For example, hexavalent chromium (i.e., Cr(VI)) is an oxidized valence state of chromium that is generally highly toxic whereas trivalent chromium (i.e., Cr(III)) is a reduced form of chromium that is generally less toxic (see Section 6.0). Oxidation-reduction reactions are commonly referred to as "redox" reactions.

4.2.2 Fate and Transport Data

In this section the chemical characteristics and available environmental fate and transport data for organic and inorganic contaminants of concern at the Hooker/Ruco site are summarized with the exception of bioconcentration factors (BCFs). BCFs are not addressed, since the only surface water bodies impacted by the site are the two small on-site sumps (i.e., 3 and 4) that could not support large edible fish species (See Section 3.1 of the Draft Remedial Investigation Report, April 1990). In order to focus the discussion of the fate and transport of contaminants, the following sections will be restricted to the identified contaminants of potential concern at the Hooker/Ruco site based on the results of the risk assessment (See Section 3.0).

For purposes of discussion, the organic contaminants of concern were grouped into three generalized types sharing similar physicochemical and behavioral characteristics. These classes are: 1) volatile organic compounds (VOCs), 2) semivolatile organic compounds, and 3) pesticides and PCBs. The VOCs are subdivided into halogenated and non-halogenated classes of compounds. "Halogenated" means that one or more halogen element (i.e., chlorine, fluorine, bromine) is integral to the chemical structure of the compound, whereas halogens are absent from the chemical structure of the non-halogenated compounds. At the Hooker/Ruco site, all of the halogenated VOCs of potential concern are chlorinated VOCs (which means that chlorine is the halogen attached to the organic substrate), except bromodichloromethane (which contains both chlorine and bromine). The BNAs are subdivided into four classes of compounds that have generally similar environmental behavioral characteristics: polycyclic aromatic hydrocarbons (PAHs) and hexachlorobenzene, phthalate esters, phenolic compounds, and "other miscellaneous base-neutral compounds". The class "other miscellaneous base-neutral compounds" consists of individual semivolatile compounds that do not belong to one of the other three semivolatile

classes. Pesticides and PCBs are considered together because of their broadly similar physicochemical and environmental behavioral characteristics. Sources of the classes of chemical compounds and a brief account of their presence at the site are discussed. In each section a summary of the anticipated fate for the chemical classes is given. Summaries of the fate and transport data of specific chemicals are given in Table 4-1 (organic) and Table 4-3 (inorganic), and the behavior of the organic classes of compounds and of the elements are summarized in Tables 4-2 and 4-3, respectively.

Organic Chemicals

1. Volatile Organic Compounds

The VOCs of potential concern at the Hooker/Ruco site (Table 4-1) have been classified as halogenated and non-halogenated. Each of these classes will be discussed in the subsections that follow.

(a) Halogenated Volatiles

Twelve halogenated VOCs (chloroform, chloromethane, trans-1,2-dichloroethene, trichloroethene, 1,1,1-trichloroethane, carbon tetrachloride, 1,1-dichloroethene, bromodichloromethane, vinyl chloride, chlorobenzene, tetrachloroethene and 1,1,2,2-tetrachloroethane) have been identified as contaminants of concern at the Hooker/Ruco site. Summary data for environmental fate and transport characteristics of the halogenated volatiles are given in Table 4-1 and Table 4-2. The halogenated VOCs are commonly used solvents and degreasers in a variety of industrial processes (Merck, 1990).

Summary of Environmental Tendencies - Environmental fate and transport characteristics of halogenated VOCs are summarized in Table 4-2. Halogenated VOCs are generally mobile and not very persistent in the environment, principally due to their high volatility, low adsorption to soils, and high aqueous solubility. Because of these characteristics, the primary fate and transport mechanisms affecting VOCs are volatilization into the air and migration in groundwater. The high volatility of VOCs limits, somewhat, the extent to which groundwater transport will be a major transport process, because the VOCs may volatilize out of unconfined or partially confined waterbodies. Due to the high mobility of halogenated VOCs, a decrease in their concentrations in the various matrices is anticipated with time, as long as there is no additional input of these compounds. The chlorinated VOCs also tend to undergo degradation reactions in anaerobic soil systems. The degradation reactions involve the loss of chlorine ions from the chemical structure, resulting in progressive dechlorination. Figure 4-1 illustrates the transformation pathways for the chlorinated VOCs.

The compounds to the left in Figure 4-1 contain more chlorine atoms in their chemical formulae than the compounds to their right. For example, tetrachloroethene (PCE), which contains four chlorines, degrades to trichloroethene (TCE), which contains three chlorines. TCE and 1,1,1-trichloroethane (1,1,1-TCA), both of which contain three chlorines, may degrade into a variety of dichloroethenes (DCE) or dichloroethanes (DCA), which contain two chlorines. The dichlorinated compounds may in turn degrade into the monochlorinated compounds vinyl chloride or chloroethane (Figure 4-1). The chlorinated volatile organic degradation pathway presented may be occurring since breakdown products of 1,1,1-trichloroethane, 1,1-dichloroethene, trichloroethene, trans-1,2-dichloroethene, and tetrachloroethene were detected in on-site matrices.

(b) Non-Halogenated Volatiles

Nine non-halogenated VOCs (benzene, ethylbenzene, toluene, total xylenes, styrene, acetone, 2-butanone, 4-methyl-2-pentanone and carbon disulfide) have been identified as contaminants of concern at the Hooker/Ruco site. Specific physicochemical characteristics of the non-halogenated VOCs of concern are listed in Table 4-1. The non-halogenated VOCs are also widely used industrial solvents, and may also occur in refined petroleum and petroleum combustion exhaust fumes (Merck, 1990).

Summary of Environmental Tendencies - Environmental fate and transport characteristics of non-halogenated VOCs are summarized in Table 4-2. Compounds of this subclass generally are mobile and not very persistent in the environment due to their high volatility, low to moderate adsorption to soils, and high water solubility. The environmental behavior of the non-halogenated VOCs differs from the halogenated VOCs primarily in that the non-halogenated compounds are subject to more rapid biodegradation/biotransformation processes that further contribute to low persistence in the environment.

2. Semivolatile Organic Compounds

Semivolatile organic compounds have been identified as contaminants of concern in various environmental matrices associated with the Hooker/Ruco site.

(a) Phthalate Esters

Three phthalate esters, (bis(2-ethylhexyl)phthalate, di-n-butylphthalate, and di-n-octylphthalate), have been identified as contaminants of potential concern at the Hooker/Ruco site. Specific physicochemical parameters of the phthalate esters of concern are listed in Table 4-1. Phthalate esters are base-neutral extractables which are often released into the

environment as a result of various manufacturing processes and as a result of their presence in plastics and surface coatings (i.e., paint, etc; Merck, 1990). Their presence on the site may be a result of past and/or present manufacturing operations, since phthalates are utilized as platicizers and they are common carrier bases of surface coatings which were and still are produced at the facility. Additionally, phthalate esters are, because of their presence in plastics, a common laboratory contaminant.

Summary of Environmental Tendencies - Environmental behavioral characteristics of phthalate esters are summarized in Table 4-2. In general, phthalate esters associated with the site are relatively persistent in soil matrices. This is primarily due to their high affinity for organic matter and soil particles, moderate water solubility, resistance to photolytic, oxidative and hydrolytic degradation, and low volatilization rate. However, once desorbed from soil, phthalate esters would not persist appreciably due to their moderate water solubilities and moderate susceptibility to microbial degradation. Microbial degradation may occur under certain environmental conditions leading to a decrease in phthalate ester concentrations. Short-chain phthalate esters (e.g., diethylphthalate) are more soluble than long-chain esters (e.g., di-n-octylphthalate) and complexation with fulvic acid (an organic acid commonly produced in soils) can greatly increase aqueous solubility.

(b) Phenolic Compounds

One phenolic compound, 4-methylphenol, has been identified as a contaminant of concern at the Hooker/Ruco site. Data describing the physicochemical characteristics that affect the fate and transport of the phenolic compounds of potential concern at the site are shown in Table 4-1. The environmental behavioral tendencies of the phenols are summarized in Table 4-2. Phenolic compounds are used in the production and manufacture of rubber, disinfectants, and wood preservatives (Merck, 1990). They are also utilized as antioxidants in certain types of surface coatings. Phenolic compounds are also formed in decaying organic matter, such as decaying leaves or logs.

Summary of Environmental Tendencies - The phenols are highly soluble in water and subject to relatively rapid microbial biodegradation under most environmental conditions. Oxidation of phenols may occur in aerobic environments. Binding affinity to organic matter in soils is highly variable, with most phenols adsorbing moderately to weakly. Hydrolytic and photolytic reactions are thought to occur, but at slow rates under special conditions and so are not considered significant fate processes for phenols. With few exceptions, phenolic compounds are not very persistent in environmental matrices due primarily to microbial degradation. Their moderate solubility, generally low adsorptive affinities, and oxidation

reactions also contribute significantly to the limited persistence of phenolics in the environment.

(c) Polycyclic Aromatic Hydrocarbons (PAHs) and Hexachlorobenzene

Eleven PAHs (acenaphthene, anthracene, benzo(a)pyrene, fluoranthrene, fluorine, pyrene, phenanthrene, 2-methylnaphthalene, indeno(1,2,3-c,d)pyrene, benzo(g,h,i)perylene and dibenzofuran) and hexachlorobenzene have been identified as compounds of potential concern at the site. Benzo(a)pyrene was selected as a representative example of several carcinogenic PAHs detected on site (see Section 3.0), all of which exhibit similar chemical characteristics. Relevant data describing the physicochemical characteristics that affect the fate and transport of the PAHs and hexachlorobenzene are shown in Table 4-1 and summarized in Table 4-2. PAHs are components of oil base paints, asphalt, fuels, oils and greases. Hexachlorobenzene is utilized in organic synthesis and as a fungicide (Merck, 1990).

Summary of Environmental Tendencies - The PAHs are persistent and generally immobile in site soil matrices under normal environmental conditions. This is primarily due to their low water solubility and resistance to photolytic, oxidative and hydrolytic degradation, and their high affinity for adsorption to organic matter and soil particles. However, in the presence of organic cosolvents, PAHs mobility in soils can be greatly enhanced. PAHs can be degraded by microbial populations, however, this is generally a slow process in the environment. Among PAHs, 2-methylnaphthalene is relatively mobile in the environment due to its lower adsorptive affinity and higher aqueous solubility in comparison to most PAHs. The carcinogenic PAHs tend to be high molecular weight compounds and are less mobile in the environment, and more likely to bind to soil particles. Hexachlorobenzene is persistent and typically immobile in soil matrices due to its low aqueous solubility, resistance to hydrolytic degradation, and high affinity for adsorption to organic matter and soil particles. As with the PAHs, the mobility of hexachlorobenzene can be enhanced in the presence of more mobile organic chemicals.

(d) Other Miscellaneous Base-neutral Compounds

N-nitrosodipropylamine and benzoic acid were also found to be a chemicals of concern at the Hooker/Ruco site (Section 3.0). Relevant data describing the physicochemical characteristics that affect the fate and transport of these compounds are shown in Table 4-1 and summarized in Table 4-2.

Summary of Environmental Tendencies - The high aqueous solubility, low sorption, low volatility and susceptibility to photolytic degradation or transformation processes of N-nitrosodipropylamine controls its environmental fate, causing the compound to be both transitory and mobile. Due to its nitrogen-containing group, N-nitrosodipropylamine is highly susceptible to microbial degradation. Benzoic acid exhibits a high aqueous solubility and low sorption, which causes this compound to be highly mobile in aqueous matrices.

3. Pesticides and PCBs

Physicochemical data for the pesticides and PCBs of potential concern at the site are listed in Table 4-1 and environmental behavioral tendencies are summarized in Table 4-2. Pesticides and PCBs have quite different chemistries, uses, and sources. They are considered together, however, because of their similar environmental behavioral characteristics. Pesticides are commonly used in agriculture as well as in commercial and residential areas to control insect populations. The principal use of PCBs was as dielectrical fluids in electrical transformers and capacitors (Merck, 1990).

Summary of Environmental Tendencies - Pesticides and PCBs are generally persistent in the environment, primarily due to their resistance to degradation, low water solubility and volatility, and very high adsorptive affinity for soils and organic matter. They are typically highly resistant to biodegradation and when it does occur, it is a very slow process. Degradation products of DDT are DDD and DDE, both of which were detected in on-site soils. Primarily as a result of their very high adsorption to soils, pesticides and PCBs are essentially immobile in soil matrices under normal environmental conditions. However, in the presence of organic cosolvents, the mobility of pesticides and PCBs in soil can be greatly enhanced.

Inorganics

Metals are normal constituents of parental material (e.g., rock, soil) and common constituents in aqueous matrices due to leaching from parental material. However, a number of metals detected at the site (listed in Table 4-3) were present at concentrations in excess of those levels considered background in site environmental media (see Section 4.0 of the Draft Remedial Investigation Report, April 1990). The metals listed in Table 4-3 were selected as contaminants of concern based on the Risk Assessment (Section 3.0). This section will focus on the environmental behavior of the metals of potential concern.

Unlike the organic compounds discussed in preceding sections, the metals are difficult to discuss in terms of behaviorally similar groups. Additionally, many of the fate and transport mechanisms

that may be important for organic compounds have little impact on the metals. Volatilization, for example, only applies to a select few metals or metallic compounds (e.g., Hg, some organo-metallic compounds), and then under special conditions. Photolysis is also of negligible importance to the environmental behavior of metals and most metallic compounds. The environmental behavior (i.e., the low temperature geochemistry) of the metals has been widely studied and the characteristics of individual metals are generally better understood than those of individual organic compounds. On the other hand, it is sometimes difficult to distinguish between naturally-occurring and introduced metals, particularly in the case of geochemical major (Al, Ca, Fe, Mg, K, and Na) and minor (Ba and Mn) elements.

The most important factors controlling metal fate and transport are solubility, redox behavior, aqueous speciation, and sorption behavior, all of which are functions of the ambient geochemical environment. As mentioned above, volatilization and photolysis are of limited importance. Biotransformation processes can be important for some metals (e.g., Hg, As) under certain environmental conditions. All metals are, to variable extents, subject to cation-exchange reactions with minerals present in the environment. The extent to which cation-exchange occurs is dependent on the mineral species present and on pH, as well as on the characteristics of individual metals.

The mobility of metals within environmental matrices depends upon numerous factors such as the relative stabilities of individual valence states (which are element-specific), oxygen content, pH and Eh conditions, and the presence of available complexing agents. The expected predominant dissolved species or minerals of the metals in aqueous systems usually can be deduced from geochemical equilibrium models expressed in Eh-pH diagrams. However, such predictions are highly speculative and therefore, they will not be attempted or presented here.

Sources and Background - Relevant data for the metals of interest at the site that effect environmental fate and transport are presented in Table 4-3. A synopsis of the important characteristics affecting the environmental fate of these metals was compiled from USEPA (1979), Clement Associates (1985), and other sources, and is presented in subsequent sections.

In general, metals have a high adsorptive affinity for inorganic mineral surfaces and organic matter. Adsorption, for most metals, is highly pH-dependent, with desorption generally more favored at low pH and sorption mechanisms dominating at higher pH conditions. However, the types of clays and their surface charges in relation to soil pH values, dictate whether sorption or desorption will occur. Additionally, chemical speciation determines the relative degree of adsorption among different species of a particular metal. Based on the data available for site soils, sorption is most probably a significant fate process for metals in site groundwater. The aerobic conditions in the groundwater are likely to promote the precipitation of ferromanganese

oxides and oxyhydroxides (probably nucleating on sand and soil grains) to which other metals will readily adsorb. A brief discussion of the important controls on fate and transport of the metals of interest at the site follows in the subsequent paragraphs.

Arsenic

In the environment arsenic occurs predominantly in the As(+3) and As(+5) valence states and, although certain conditions may promote the formation of arsenious (H_3As0_3) or arsenic (H_3As0_4) acid, the oxidation state of arsenic is the major factor that seems to control arsenic solubilization. The inorganic state is dominant even though arsenic is involved in biological cycling that can form soluble organic complexes. A number of studies have shown that arsenic is both methylated and demethylated during biological cycling, and that the processes seem to more or less cancel each other out.

The redox chemistry of arsenic is highly analogous to that of iron and manganese, and arsenic tends to be closely associated with these two elements in aqueous systems. Under aerobic conditions, As(V) is the predominant species. Pentavalent arsenic is highly insoluble and tends to be strongly adsorbed on ferromangoan precipitates; i.e., As(V) follows the oxidized species of iron (FeIII) and manganese (MnIV). Thus, in oxidated water, arsenic is primarily associated with particulate phases. Under reducing conditions arsenic is reduced to As(III), which is soluble in anoxic waters. It should be noted that arsenic may also form complexes with anthropogenically introduced organic compounds that may affect the geochemical behavior of arsenic. The arsenate and arsenite ions, when present, may behave in a manner similar to the phosphate ion in aqueous systems.

Arsenic is adsorbed principally onto clays, aluminum hydroxides, ferromanganese oxides, and organic compounds. In general, pentavalent arsenic has a greater adsorptive affinity than trivalent arsenic. For arsenic, adsorption is most important in aerobic, acidic fresh water, with adsorption decreasing above pH 9 for As(+3) and above pH 7 for As(+5).

Antimony

The hydrogeochemical behavior of antimony is analogous to that of arsenic (and, therefore, to iron and manganese as well). Like arsenic, antimony most commonly occurs in the Sb(+3) and Sb(+5) valence states. Antimony in natural waters has not been as well studied as arsenic; however, in existing field and laboratory investigations, antimony also appears to be largely controlled by redox conditions. In aerobic waters, insoluble Sb(V) is adsorbed to ferromangoan oxides and oxyhydroxides. However, the adsorption of Sb(V) may not be as strong as As(V),

and the solubility of Sb(V) is generally higher than that of As(V). In anaerobic waters, antimony as Sb(V) is reduced to Sb(III), which is soluble.

The sorptive behavior of antimony is similar to that of arsenic, described in the preceding section. Sorption of antimony has also been described in the discussion of solubility, above.

Barium

Barium is an alkaline earth element, which is to say that it belongs to Group IIA of the Periodic Table of the elements. Barium is also a geochemical minor element, occurring in most geologic materials in concentrations of a few tenths of a percent to a few percent. Like all alkaline earths, barium occurs exclusively in the +2 valence state in nature. The aqueous solubility of barium is low in natural waters. Because of its low solubility, little data are available on the sorption behavior of barium; however, barium is thought to be readily sorbed to clay mineral surfaces.

Beryllium

Beryllium is always found in the +2 valence state in aqueous matrices and may form stable compounds with small anions if they are present (e.g., fluoride). At low pH (below 4), Be(+2) ions are the predominant species, whereas at very high pH (>12), $HBeO_2$ is the more prevalent form in water. Within normal pH ranges in the environment, the very slightly soluble $Be(OH)_2$ is the dominant species. Very little data exist for beryllium sorption behavior because of its very low solubility, however some of the available data suggest that beryllium sorbs to clay at low pH. At high pH, complexation into insoluble compounds appears to be favored over adsorptive mechanisms.

Cadmium

Cadmium may exist in soluble organic complexes or as an ionic species in water. Cadmium ions in solution are always present in the +2 valence state in aqueous environmental matrices and, based upon the site-specific Eh-pH conditions, they are expected to be the predominant species in on-site aqueous matrices. Cadmium may also be associated with the particulate phase. Cadmium is principally adsorbed by clays, organics, carbonates, and aluminum and iron oxides, with adsorption generally increasing as the pH increases.

Chromium

Chromium is an essential micronutrient that, at elevated levels, can have toxic effects. In aqueous systems chromium can theoretically occur in two oxidation states: Cr(III) and Cr(VI).

HKR 001 1482

In many ways, the hydrogeochemical behavior of chromium is the opposite of iron, manganese, arsenic and antimony. The oxidized state of chromium, Cr(VI), is relatively soluble, forming complex anions in aqueous solution. The most important of these are chromate (CrO_4^{-2}) and hydrochromate ($HCrO_4^-$). However, Cr(VI) species are not stable aqueous complexes under virtually all naturally occurring redox conditions. Hexavalent chromium is stable at Eh approaching and above the limit of atmospheric oxidation. In virtually all natural waters trivalent chromium is the stable and predominant aqueous form of chromium. In its trivalent form, chromium rapidly precipitates as insoluble oxides or hydroxides or adsorbs onto clays or oxides of other metals.

Cobalt

Cobalt is an essential nutrient that rarely occurs in soluble form in natural aquatic systems, and its hydrogeochemical behavior is therefore little studied. Available evidence suggests that cobalt behavior is analogous to that of iron and manganese in that cobalt is strongly adsorbed to metal oxides and oxyhydroxides and to clay mineral surfaces. Desorption of cobalt may be important at lower pH values.

Copper

Copper is an essential nutrient that, at elevated levels, can have toxic effects. Copper(+2) is the most prevalent form of copper in aqueous systems as most of the stable cuprous (+1) forms in toxic waters are highly insoluble. Copper may also exist in water as the hydrated divalent cupric ion. However, in general, most copper in aqueous solution is in a complexed form with organic or inorganic ligands and these are expected to be the predominant dissolved aqueous species of copper at the site. Copper is sorbed by clays, mineral surfaces, organics, carbonate, and iron and manganese oxide precipitates. In general, copper complexed with naturally occurring organic acids are more easily adsorbed by clays and free mineral surfaces than the hydrated cations. Copper adsorption is highly pH dependent and the presence of other anionic species can increase copper adsorption.

Iron

Iron has a complex redox chemistry under environmental conditions that, in part, determines its aqueous solubility. The insoluble species iron (III) is the stable form in oxidated geochemical environments. Under anoxic conditions, however, iron (III) is readily reduced to iron (II), which is soluble. The common aqueous anionic species hydroxyl, sulfide, sulfate and carbonate act as solubility controls to some extent, but in oxygenated waters with low electrolyte content, iron (III) will tend to form insoluble oxides and oxyhydroxides. These insoluble precipitates will, in

addition to iron, also contain the insoluble forms of the metals that have analogous redox behavior (e.g., manganese, arsenic, antimony) or strong adsorbtive tendencies (e.g., cobalt, lead, silver). Iron (III) may also adsorb to mineral surfaces and organic matter. Under reducing conditions, adsorbed or precipitated iron (III) will reduce to iron (II) and solubilize.

Lead

Lead(+2), is the most common stable ionic aqueous species with hydroxyl, carbonate, sulfide and sulfate anions acting as solubility controls. Under aerobic conditions, $PbSO_4$ and to a lesser extent $PbCO_3$, control lead solubility; whereas, under anaerobic conditions, PbS concentrations mediate aqueous lead solubility. Lead may also exist in soluble organic complexes (i.e., humic and fulvic acids) in aqueous matrices. Lead-containing organo-metallic complexes may be other forms of dissolved lead in aqueous matrices on site. Lead adsorbs principally to clays, hydrous iron and manganese oxides, mineral surfaces, and organic compounds. Lead adsorption is very pH-dependent, with low pH conditions favoring desorption.

Manganese

Manganese occurs in the +2 and +4 oxidation states in aqueous systems. In oxidated waters, Mn(IV) is the stable form. Mn(IV) is insoluble and precipitates, along with Fe(III), to form ferromangoan oxides and oxyhydroxides. In anaerobic waters, manganese is reduced to Mn(II) which is soluble under continuing reducing conditions. Studies of natural systems have shown that Mn(IV) is the first (i.e., the least soluble) metal to precipitate of the behaviorally analogous group manganese, iron and arsenic. Similarly, the reduction of Mn(IV) to Mn(II) and the accompanying resolution occurs before the reduction of Fe(III) or As(V). As long as aerobic conditions persist in the groundwater, transport of manganese in aqueous solution will be of minor significance. Manganese readily forms insoluble oxides in aerobic waters. The formation of manganese oxides often requires nucleation on a particle resulting in "manganese coatings". The formation and continued growth of manganese coatings is an adsorption process. Adsorption is an important process under aerobic conditions but is readily reversed if conditions become anaerobic.

Mercury

Mercury may exist in the 0, +1, or +2 valence states in natural waters, depending on Eh-pH conditions. Above pH 5 and under moderately oxidizing conditions, dissolved elemental mercury is expected to be the predominant inorganic aqueous species. Mercury readily complexes with organic matter via biologically and non-biologically mediated processes. As a result, dissolved methyl mercury ion and undissociated dimethyl mercury may be present in aqueous matrices if

mercury is present. Some studies have found mercury concentrations in surface waters vary with the biological cycle (i.e., vary seasonally with biological activity). Mercury is strongly absorbed to many inorganic surfaces and organic matter. Desorption may occur under low pH conditions.

Nickel

Nickel almost always occurs as Ni(+2) in aquatic environments. Although in general, groundwater Eh-pH conditions seem to favor the presence of dissolved nickel, in aqueous matrices nickel may be primarily associated with the particulate phases because of its strong adsorptive affinity. Nickel sorbs to hydrous iron, manganese oxides, clay minerals, and organic material.

Selenium

Selenium is an essential nutrient, but can be toxic when only slightly above required levels. The geochemical behavior of selenium is similar to that of sulfur, and selenium occurs in both cationic (mostly +4) and anionic (-2) states. More rarely, selenium can occur in the native (0) state. However, this occurs only under anoxic conditions.

Silver

Silver(I) is the predominant species in natural waters, although it may also occur in the +2 and +3 valence states as a complexed ion. Silver tends to be closely associated with iron-manganese oxide and oxyhydroxide precipitates under aerobic conditions. Strong adsorption to metal precipitates, clay minerals and organic matter limits the mobility of silver, especially at higher (>7.0) pH values. Silver also forms insoluble silver salts with many of the common inorganic ligands (e.g., chloride, carbonate).

Vanadium

Vanadium can occur in the +3, +4, and +5 valence states in the normal range of environmental conditions. In addition to the complexity introduced by the multiple oxidation states, the aqueous geochemistry of vanadium is further complicated by the bewildering variety of complex ions that vanadium may form. In simplified form, however, the chemical behavior of vanadium somewhat resembles that of chromium. In reducing environments, vanadium is insoluble, and its solubility increases as conditions becoming increasingly oxidizing. Vanadium is readily adsorbed by clays and organic matter. Adsorption by organic matter is probably more correctly a reductive, and therefore an immobilizing, reaction.

Zinc

In most natural waters, zinc occurs as the hydrated divalent (+2) cation. In organically polluted waters, complexing with organic compounds may be an important process. The solubility of zinc is strongly dependent on pH, with low pH favoring increased solubility. Zinc has a strong affinity for adsorption to hydrous metal oxides, clays and organic matter. Adsorption of zinc is strongly favored at higher (>7) pH values.

Summary -In general, the metals of interest associated with the site are persistent and immobile within environmental matrices under normal environmental conditions. This persistence is primarily related to recycling mechanisms within environmental matrices for some metals (e.g., arsenic, lead, and copper), and removal mechanisms (precipitation, cationic exchange, adsorption, etc.) which decrease mobility. Chemical speciation of metals in the environment results in metals in both solid and aqueous media. However, the fate reactions and the behavior of these metals under site geochemical conditions may lead to an increase or decrease in their concentrations in specific matrices.

4.3 TRANSPORT AND MECHANISMS OF MIGRATION

Contaminants may migrate from a source area via a variety of mechanisms. The importance of a given mechanism is controlled by the specific physical, geochemical, climatic, and hydrologic conditions at a given site as well as by the physicochemical characteristics of the contaminated media. In this section of the report, the following potential pathways for the fate and transport of contaminants of concern found at the Hooker/Ruco site will be considered:

- Migration of contaminants from potential source areas to environmental media;
- Percolation and migration of contaminants into groundwater;
- Migration of contaminated groundwater off-site;
- Migration within surface runoff and transitory impounded surface water; and
- Migration of contaminants into air.

The importance of these pathways to the classes of contaminants found at the site will be discussed in the sections that follow.

4.3.1 Migration of Contaminants from Potential Source Areas to Environmental Media

Contamination of the Hooker/Ruco site has occurred in the past as the result of manufacturing, drum storage and raw material handling operations. Although PCB contaminated soil surrounding the pilot plant building is currently being removed from the site, several localized

areas of contaminated soil still remain. Chemicals from these potential sources of contamination may migrate within and/or into the surrounding environment in several ways. Potential sources that are localized contaminated soil areas contain contaminants that may be transported into underlying soils and groundwater by the percolation of rain. Additionally, since surface runoff and some ponding occurs during heavy rainfall events in localized areas on site that are also within or adjacent to localized contaminated soil areas (see Sections 3.0 and 4.0 of the Draft Remedial Investigation Report, April 1990), the more water-soluble contaminants may migrate within this surface runoff and ponded water and spread to surrounding soils. Surface runoff may also transport fine particulates that have contaminants adsorbed to them to other areas if the surface runoff flow is sufficient to entrain contaminated soil particulates. Dry, windy weather may result in the entrainment of contaminated soil particles from exposed soil sources into the atmosphere, with subsequent deposition over adjacent areas onto soils that may then cause contaminants to be transported by percolating rainwater into underlying soils and/or groundwater, or by surface runoff to other surficial site areas. Finally, volatile contaminants may volatilize from contaminated matrices and be emitted into the atmosphere and subsequently transported by prevailing winds.

It is likely that each of the above processes has occurred and is continuing to occur; however, the extent to which contamination observed in individual environmental media samples may be due solely to a specific given point-source or an areal concentration of contamination is highly speculative. For example, it is not possible to conclude that aeolian deposition of entrained contaminated surface soil particles during dry, windy periods was the only (or even the primary) source of metals in surface soils adjacent to the process buildings or on the eastern side of the site, because of the wide variety of ways (e.g., discrete spill events or sources that no longer are present on-site, etc.) that metals (or other contaminants) may have been introduced into the soils in these areas.

4.3.2 Percolation and Migration into Groundwater

Contaminants of concern present in soils at the Hooker/Ruco site may migrate into groundwater by the percolation of rainwater through contaminated soils. Incorporation of contaminants within this percolating water may be through direct dissolution of contaminants from soil into the percolating water or by dissolution into more water soluble organic compounds already entrained within the percolating rainwater (i.e., cosolvent effects). Principal chemical contaminant classes present on site that may migrate via this potential pathway are discussed in the subsections that follow.

Volatile Organic Compounds

The volatile organic compounds of concern are characterized by high aqueous solubilities and low adsorptive affinities for soils. Due to the highly permeable nature of the sandy site soils in conjunction with these characteristics, incorporation into percolating rainwater with their eventual solubilization and transport in groundwater will be a major environmental fate mechanism for these volatile organic compounds. This is substantiated by the groundwater data, which indicated numerous volatile contaminants in groundwater (some of which occurred at several hundred ppb levels) that were also present in overlying soils at elevated (ppm levels) concentrations (see Section 4.0 of the Draft Remedial Investigation Report, April 1990).

Semivolatile Organic Compounds

Only one semivolatile organic contaminant of concern, bis(2-ethylhexyl)phthalate, was detected in groundwater. This contaminant of concern was also present at elevated concentrations (ppm levels) in on-site soils. Also detected within groundwater, but not contaminants of concern, were one PAH (naphthalene) and two additional phthalates (di-n-butyl and di-n-octylphthalate). Although PAHs and phthalates are typically not readily transported through soil due to their generally low aqueous solubilities and high adsorptive affinities, cosolvent effects mediated by the more mobile volatile organic compounds present may be enhancing PAH and phthalate downward migration in soils. This is suggested by the soils data, which noted some PAHs occurring 9 to 11 feet below grade and several phthalates at ppm levels occurring up to 47 feet below grade in association with volatile organic compounds. Naphthalene is somewhat soluble in water (solubility = 31.7 ppm) and exhibits a lower adsorptive affinity (K_{oc} = 940) in comparison to other PAHs, which may account for its presence as the only PAH in groundwater beneath the site. Similarly, bis(2-ethylhexyl)phthalate, and the other two phthalates detected as well, are moderately soluble and have a high affinity for organics and thus, their migration into groundwater may also be enhanced by the presence of volatile organic compounds exerting cosolvent effects. In general, adsorption is anticipated to be the primary fate mechanism for most PAHs and an important factor for phthalates in site soils, with some enhanced migration due to volatile organic compounds cosolvent effects, while the migration of naphthalene, bis(2-ethylhexyl)phthalate, di-n-butylphthalate, and di-n-octylphthalate into groundwater is of major importance.

Metals

The transport of metals into groundwater is a function of the solubility (and related leachability) of a given metal in a specific water mass under specific conditions. Under site pH conditions (values range from 5.22 to 7.56), the metals of concern are generally immobile to slightly mobile,

except for manganese, selenium, and vanadium, which may be highly mobile under site groundwater conditions (Table 4-3). Transport of metals into groundwater may also occur, to some extent, with particulate phases to which the metals are adsorbed. In aquifers, transport of particulates is principally limited to colloid-size (i.e., extremely small, generally defined as less than 0.7 um in diameter) particles, or particles smaller than the available pore space. Larger particles cannot pass through aquifers because of their size (generally larger than the pore space) and because the energy of the water that is slowly percolating through the ground is usually insufficient to carry particles larger than colloids in suspension. Groundwater samples from the site were analyzed for total metals (i.e., unfiltered) and therefore, the partitioning of detected metals concentrations among the particulate (> 0.45 um) and dissolved fractions is not possible. It should be noted however, that total suspended solids and total dissolved solids were measured in the remedial investigation and these results indicated that suspended material was present in all wells, ranging from 20 to 240 ppm for total dissolved solids and 6 to 70 ppm for total suspended solids, with the greatest values typically occurring in the shallow wells. On-site groundwater metals concentrations were also generally greatest in the shallow wells, which suggests that some metals concentrations in groundwater may be due wholly or in part to particulates with adsorbed metals on their surfaces. Since the soil pore spaces are relatively large at the site because the subsurface soil composition is principally sand or sand and gravel, limited transport of fine particulates with metals adsorbed to them within percolating rainwater and/or groundwater may be occurring.

Irrespective of the partitioning among particulate and dissolved fractions, total metals groundwater concentrations for numerous metals were higher within on-site and/or hydrologically downgradient off-site wells when compared to the hydrologically upgradient off-site wells, and several metals exceeded existing regulatory groundwater criteria (see Section 4.0 of the Draft Remedial Investigation Report, April 1990). Several of these metals exhibiting elevated levels in on-site groundwater were also present at elevated concentrations in the overlying on-site soils, which implies that some metals are migrating from soils to groundwater via percolating rainwater. Hence, migration into groundwater by metals, either dissolved and/or associated with fine entrained particulates, is an important transport and migration mechanism for soil metal contaminants.

Pesticides and PCBs

Pesticides and PCBs are expected to persist in soils and to exhibit limited mobility because of their low aqueous solubilities and high adsorptive affinities. This behavior is confirmed at the Hooker/Ruco site by the non-detection of pesticides and PCBs in all groundwater samples except for trace amounts (less than 0.015 ug/l) of Dieldrin in Well G2 and heptachlor epoxide in wells G1 and G2. Although much greater migration (up to 47 feet below grade) in soils assuming an

original surficial source was noted for pesticides and PCBs than is typically expected for these compounds, which may have been caused by more mobile volatile organic compounds mediated cosolvent effects, this enhanced migration did not result in groundwater contamination except for the trace amounts of Dieldrin and heptachlor epoxide mentioned above. Migration into groundwater is therefore an insignificant environmental fate process for most pesticides and PCBs at the site.

4.3.3 Migration of Contaminated Groundwater Off-Site

Groundwater that is contaminated at the site may migrate through subsurface aquifers, thereby spreading and dispersing the contaminants. Migration of contaminants in groundwater is controlled by two processes: advection and dispersion. Advection is the process by which dissolved contaminants are transported by the bulk motion of groundwater flow. Dispersion is the spreading of dissolved contaminants as they move with groundwater, and results from two basic processes: molecular diffusion and mechanical mixing. Both advection and dispersion act on contaminants in solution. Contaminants associated with large solid phases generally are not transported by groundwater, however some transport of very fine particles (i.e., colloids) may occur.

As presented in Section 3.0 of the Draft Remedial Investigation Report, April 1990, the local shallow groundwater flow direction at the site is towards the southwest, south and southeast from the northeast corner of the site with the predominant flow direction toward the southwest based upon water level measurements obtained from monitoring wells during the remedial investigation. In contrast, the deep groundwater flow is more uniform across the site and trends toward the south. However, because of the limited number of off-site wells and their locations, the areal limits of the off-site groundwater contaminant plume could be inferred from the chemical data (see Sections 3.0 and 4.0 of the Draft Remedial Investigation Report, April 1990). Due to these data constraints, evidence of the actual areal extent of contaminants transported off-site via groundwater cannot be verified with monitoring well data. Therefore, only speculative generalizations can be made about the contaminant classes that may migrate via this potential pathway. These generalizations by specific contaminant classes detected within groundwater are discussed in the paragraphs that follow.

The volatile organic compounds present in groundwater would be expected to migrate with the groundwater flow primarily due to their high aqueous solubilities and low adsorptive affinities. However, for naphthalene, bis(2-ethylhexyl)phthalate, di-n-butylphthalate, di-n-octylphthalate, Dieldrin and heptachlor epoxide, their relatively high adsorptive affinities would restrict their transport within groundwater over any great distance by their adsorption to surrounding soil particles. The metals detected in groundwater, particularly those present in solution as ionic

species, would be expected to migrate with the groundwater flow until they are adsorbed by surrounding soil particles. Considering the porous nature of the soil parental material through which groundwater is moving (e.g., primarily sand and gravel), some metals may also be transported with very fine suspended particulates and/or colloidal matter to which they are adsorbed. This scenario is suggested by the fact that suspended particulates were quantified in all monitoring wells. However, groundwater transport via suspended particulates would be anticipated to occur only over short distances until these fine particulates become trapped within the subsurface soil matrix.

Based upon general physicochemical characteristics, off-site migration within groundwater will be an important transport mechanism primarily for volatile organic compounds and dissolved metals at the site. Although the extent of this migration is currently unknown, it will be controlled principally by groundwater flow and dilution effects, and contaminant removal mechanisms such as adsorption, equilibrium dissolution-precipitation conditions, and for some constituents, limited volatilization from groundwater into interstitial voids within the overlying vadose zone soils.

4.3.4 Migration within Surface Runoff and Transitory Impounded Surface Water

Transitory ponding of stormwater can occur at several on-site locations during extremely wet periods or intense rainstorms (see Section 3.0 of the Draft Remedial Investigation Report, April 1990). While these ponded areas in natural depressions are short-lived, contaminants may become solubilized from underlying contaminated soils and spread laterally to uncontaminated adjacent soils by adsorption or by residuals remaining when the ponded water recedes and/or percolates into the soil.

Stormwater ponding areas where this type of contaminant migration is likely to occur are watersheds 1, 2, 3, 4 and 6 (see Figure 3-4 in the Draft Remedial Investigation Report, April 1990). Among the contaminants present in surface soils near or within these areas, principally volatile organic compounds and/or metals would be expected to be dispersed within the ponded stormwater due to aqueous solubilities and adsorptive affinities. However, the dissolved volatile organics would be short-lived within the unconfined ponded water, due to subsequent volatilization. Thus, primarily metals would be expected to be dispersed within the ponded water to adjacent soils. Although this type of migration may be occurring, principally for metals, the migration of contaminants within transitory ponding stormwater would be an insignificant transport mechanism, due to the small areal extent of stormwater ponding, and its infrequent occurrence and short duration due to the highly porous nature of the on-site soils.

Although no defined surface water streams occur on or adjacent to the site, several surface water drainage ditches and stormwater catch basins exist on-site that direct stormwater surface runoff via underground piping to the various sumps (recharge basins) located near the eastern boundary (see Figure 4.2 in the Draft Remedial Investigation Report, April 1990). During storm events, contaminants may become solubilized in surface runoff from underlying contaminated soil and transported via these conduits to the sumps with some infiltration of contaminated rainwater and limited subsequent adsorption of contaminants to the underlying sediments and soils during infiltration occurring along unlined surface water drainage ditches. If the stormwater runoff flow is sufficient, contaminated soil transport may also occur from on-site areas that are not paved or vegetated to stormwater catch basins and/or drainage ditches with subsequent transport and deposition within stormwater conduits and/or the on-site sumps. The remedial investigation results substantiate the above contaminant transport scenario since site contaminants that exhibit high adsorptive affinities to soil particulates (i.e., PAHs, phthalates, pesticides and PCBs) are present at elevated concentrations in sump sediment and underlying soils, the locations of which are some distance from these contaminants source areas in on-site soils. Thus, the migration of contaminants dissolved within and/or adsorbed onto entrained soil particles within surface runoff, particularly during heavy rainfall events, will be a significant transport mechanism at the site that primarily redistributes contaminants from various on-site areas to the drainage ditches and ultimately to the sump recharge basins.

4.3.5 Migration of Contaminants in Air

Contaminants may migrate into air via two distinct emission mechanisms: entrainment of contaminated particulates by the wind (i.e., fugitive dust emissions), and volatilization, primarily of organic compounds. The extent of particulate entrainment at a site is governed in large part by climatic conditions (dry, windy conditions are more conducive to entrainment than wet, calm conditions). Other factors that affect entrainment of particulates include the activities that occur on the site, the extent of paved and/or vegetated areas, and the grain size distribution of the surface soil. Volatile organic compounds can migrate into air from surface and subsurface soils. Volatilization from surface materials is essentially unrestricted, and so is governed only by the physicochemical characteristics of a given compound under ambient conditions. Volatilization from subsurface materials is more complex and factors such as soil moisture and permeability must be taken into account.

At the site, several unpaved and non-vegetated areas exist that contain contaminated surficial soil. Many of the soil contaminants present exhibit elevated adsorptive affinities to soil particles (e.g., PAHs, pesticides, PCBs, metals, etc.). As a result of this, exposed surficial soil particles with contaminants adsorbed to their surface can become entrained into the air during dry, windy periods and transported with the prevailing winds until they are deposited off-site or in other site

areas via wet or dry deposition processes. Although this type of migration may occur on-site to a limited degree, airborne entrainment of contaminated soil particulates is assessed to be an insignificant environmental transport mechanism for the Hooker/Ruco site since air monitoring data showed no PCBs on airborne particulates resulting from the windborne entrainment of heavily contaminated on-site PCB containing surficial soils.

The emission of volatile organic compounds from unpaved surficial and subsurficial soils is expected, since volatile contaminants were present in the on-site sandy vadose zone soils. Although the vegetative cover, particularly the grass mats, would inhibit volatile emissions somewhat, they would most probably still occur. As discussed in Section 3.3.4, volatile compounds may also be emitted from surface runoff and transitory ponded stormwater. Once emitted, the volatile compounds would be transported with the prevailing winds. Therefore, volatile emissions with their concomitant migration via the prevailing wind would be a viable transport mechanism for some areas of the Hooker/Ruco site. Although viable, volatile emissions are not significant at the site since on-site air monitoring results did not detect the presence of any of the principal on-site volatile contaminants (i.e., vinyl chloride, trichlorethene, tetrachloroethene and trans-1,2-dichloroethene) in the air immediately above the site.

4.4 SUMMARY

In Section 4.0, physicochemical data and environmental behavioral tendencies of the organic compounds and metals that have been identified as contaminants of concern (see Section 3.0) at the site are presented and discussed. This information has been utilized in conjunction with analytical results of site samples and general site characteristics to describe the importance of potential fate and transport pathways for the contaminants of potential concern.

The migration of contaminants to underlying soils and groundwater by the percolation of rainwater through contaminated soils is a major environmental fate and transport mechanism at the site. The soils data indicate that numerous organic contaminants have migrated to a greater extent in subsurface soil than expected based solely on physicochemical characteristics. This enhanced migration for some of the organic contaminants is speculated to be due to cosolvent effects exerted by the more mobile volatile organic contaminants. The groundwater data show that migration through soil via percolating rainwater into groundwater is especially important for the volatile organic compounds, naphthalene, phthalate esters, the pesticides Dieldrin and heptachlor epoxide, and metals, whereas for most of the PAHs and pesticides, and PCBs, this pathway is not significant, and therefore these compounds are likely to persist at their current soil location.

Upon entering groundwater, contaminants will migrate with the local groundwater flow until dilution and removal mechanisms such as adsorption, precipitation and limited volatilization result in their eventual non-detection. Although the hydrologic data indicated a shallow groundwater flow direction radiating from the northeast corner of the site to the south and a deep uniform groundwater flow across the site toward the south, the actual extent of this migration to off-site areas could not be inferred from the chemical data. However, based upon physicochemical characteristics, dissolved volatile organic compounds and metals would be expected to migrate the farthest in groundwater, while naphthalene, phthalate esters, pesticides and metals associated with fine particulates are expected to migrate with groundwater flow for only a limited distance.

The migration of contaminants within stormwater surface runoff is a major environmental fate and transport mechanism at the site. This migration occurs in the runoff via contaminants dissolved within and/or adsorbed onto entrained soil particulates. Since most of the site's stormwater runoff is channeled to the on-site sumps (recharge basins), the sumps act as contaminant sinks where entrained particulates become incorporated into the sump sediments and/or underlying soils, and/or dissolved contaminants infiltrate the underlying soils until they are adsorbed to surrounding soil particles or enter the groundwater with subsequent transport mediated by the groundwater flow. This migration pathway is especially important for volatile organic compounds, phthalate esters, pesticides, PCBs and metals.

Contaminant migration within transitory ponded stormwater is expected to occur primarily for dissolved volatile organics and metals, with only metals persisting, due to the loss of the volatile organic compounds into the atmosphere via volatilization. Although contaminant dispersion mediated via this pathway does occur, it is of minor importance due to the small areal extent of ponded areas on site and their infrequent occurrence.

The emission of volatile organic compounds into the atmosphere from contaminated on-site soils, surface runoff and transitory ponded stormwater, and their concomitant migration via the prevailing wind, would be a viable transport mechanism for the site. Although a viable and expected transport mechanism, volatile emissions from the site are insignificant based upon site air monitoring data. Similarly, the airborne entrainment of contaminated surficial soil particulates, which may be occurring on a very limited scale during dry, windy days, would be of minor importance as shown by the on-site air monitoring results.

Among the contaminants of concern present on-site, the pesticides and PCBs will exhibit the greatest persistence in on-site matrices, due to their physicochemical characteristics. Metals will also persist until their slow dissolution in percolating rainwater reduces concentrations levels. Exhibiting moderate persistence would be the PAHs and phthalate esters, based upon physicochemical properties. In contrast, the highly mobile volatile organic compounds, benzoic acid, 4-methylphenol, and n-nitrosodiphenylamine would exhibit the least persistence in on-site matrices.

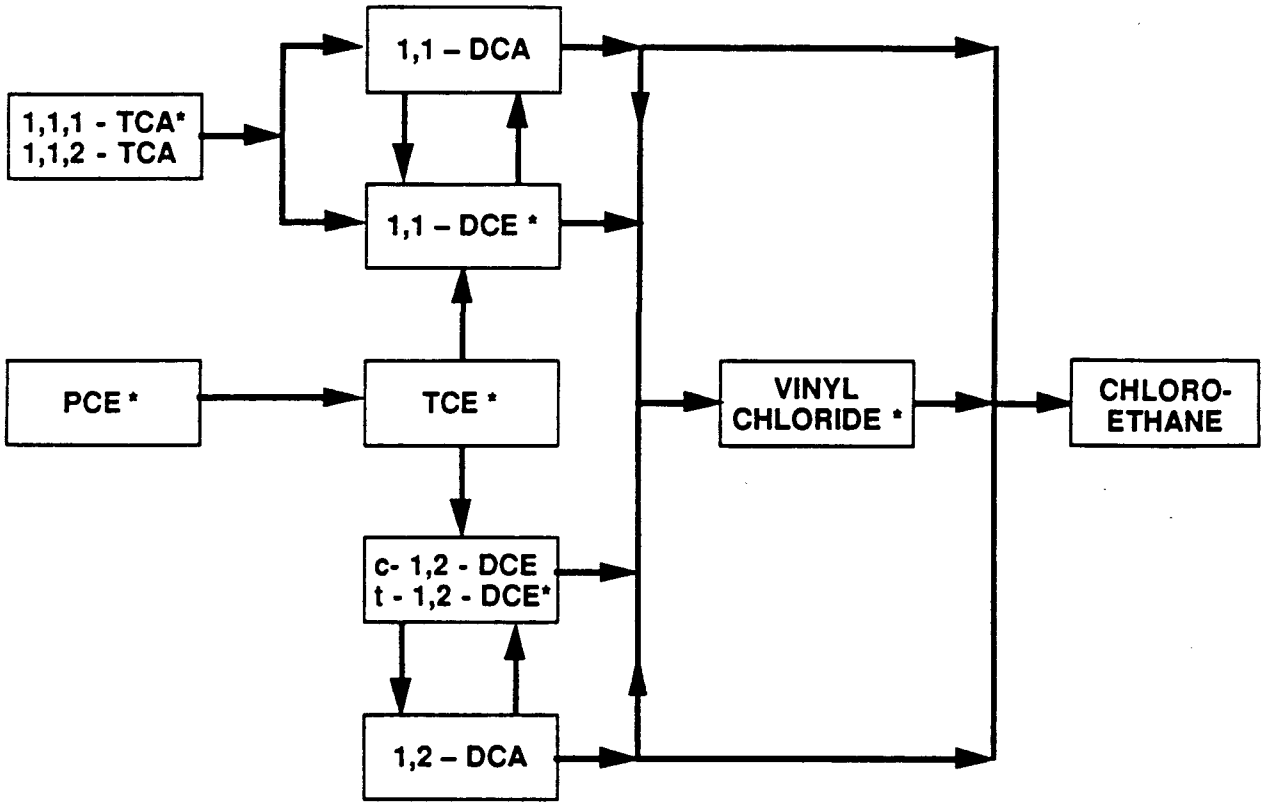

NOTE:

1,1,2 – TCA	=	1,1,2 – TRICHLOROETHANE
1,1,1 – TCA	=	1,1,1 – TRICHLOROETHANE
PCE	=	TETRACHLOROETHENE
1,1 – DCA	=	1,1 – DICHLOROETHANE
1,1 – DCE	=	1,1 – DICHLOROETHENE
TCE	=	TRICHLOROETHENE
c – 1,2 – DCE	=	CIS – 1,2 – DICHLOROETHENE
t – 1,2 – DCE	=	TRANS – 1,2 – DICHLOROETHENE
1,2 – DCA	=	1,2 – DICHLOROETHANE
*	=	COMPOUND DETECTED IN ON-SITE MATRICES AT THE HOOKER/RUCO SITE

HKR 001 1495

EBASCO SERVICES INCORPORATED	U.S. ENVIRONMENTAL PROTECTION AGENCY	EPA
DEPT _____ DR J.R. APPROVED	HOOKER/RUCO SITE	2071.162
DATE _____ CH _____	TRANSFORMATION PATHWAYS FOR VARIOUS CHLORINATED VOLATILE HYDROCARBONS IN SOIL SYSTEMS (DRAGUN, 1988)	FIG. 4-1
SCALE NONE		00

TABLE 4-1

HOOKER/RUCO SITE
ENVIRONMENTAL FATE AND TRANSPORT PARAMETERS: ORGANICS

	WATER[a] SOLUBILITY (mg/l)	VAPOR[a] PRESSURE (mm Hg)	HENRY'S LAW[a] CONSTANT (atm-m^3/mol)	K_{oc} [a] (l/kg)	Log[a] K_{ow}	Susceptible to Photolysis[b]	Susceptible to Hydrolysis[b]
1. VOLATILE ORGANIC COMPOUNDS							
HALOGENATED VOLATILE ORGANICS							
Chloroform	8.20×10^3	1.51×10^2	2.87×10^{-3}	31	1.97	Negligible	Negligible
Trichloroethene	1.10×10^3	5.79×10^1	9.10×10^{-3}	126	2.38	Negligible	No
Tetrachloroethene	1.50×10^2	1.78×10^1	2.59×10^{-2}	364	2.66	Negligible	Negligible
1,1,1-Trichloroethane	1.50×10^3	1.23×10^2	1.44×10^{-2}	152	2.5	Negligible	Negligible
1,1,2,2-Tetrachloroethane	2.90×10^3	5.00	3.81×10^{-4}	118	2.39	-	-
Carbon Tetrachloride	7.57×10^2	9.00×10^1	2.41×10^{-2}	110	2.64	-	-
t-1,2-Dichloroethene	6.00×10^2	3.26×10^2	6.70×10^{-2}	59	2.09	Negligible	No
1,1-Dichloroethene	4.00×10^2	5.91×10^2	1.90×10^{-1}	65	2.13	Negligible	No
Bromodichloromethane	4.50×10^3	5.0×10^1 (20°C)	2.41×10^{-3}	61	2.10	Negligible	Negligible
Vinyl chloride	2.70×10^3	2.66×10^3	8.14×10^{-2}	8.2	1.23	Negligible	No
Chlorobenzene	4.66×10^2	1.17×10^1	3.72×10^{-3}	330	2.84	Negligible	No
Chloromethane	6.45×10^3 (20°C)	3.76×10^3 (20°C)	4.00×10^{-2}	4.3	0.95	Negligible	Negligible
NON-HALOGENATED VOLATILE ORGANICS							
Benzene	1.75×10^3	9.52×10^1	5.59×10^{-3}	83	2.12	Negligible	No
Toluene	5.35×10^2	2.81×10^1	6.37×10^{-3}	300	2.73	Negligible	No
Ethylbenzene	1.52×10^2	7.00	6.43×10^{-3}	1.10×10^3	3.15	Negligible	No
2-Butanone (Methyl ethyl ketone)	Soluble[b]	7.12×10^1[b]	-	-	0.29[b]	-	-

TABLE 4-1 (Cont'd)

HOOKER/RUCO SITE
ENVIRONMENTAL FATE AND TRANSPORT PARAMETERS: ORGANICS

	WATER[a] SOLUBILITY (mg/l)	VAPOR[a] PRESSURE (mm Hg)	HENRY'S LAW[a] CONSTANT (atm-m^3/mol)	K_{oc} [a] (l/kg)	Log[a] K_{ow}	Susceptible to Photolysis[b]	Susceptible to Hydrolysis[b]
1. VOLATILE ORGANIC COMPOUNDS							
NON-HALOGENATED VOLATILE ORGANICS (Cont'd)							
Total Xylenes	1.98×10^{2}	1.00×10^{1}	7.04×10^{-3}	240	3.26	-	-
Carbon disulfide	2.94×10^{3}	3.60×10^{2}	1.23×10^{2}	54	2.00	-	-
Acetone	1.00×10^{6}	2.70×10^{2}	2.06×10^{-5}	2.2	-0.24	-	-
4-Methyl-2-pentanone (Methyl isobutyl ketone)	1.80×10^{4}	1.45×10^{1}	9.40×10^{-5}	106	1.19	-	-
Styrene	3.10×10^{2}[f]	6.6 [f]	2.81×10^{-3}[f]	550[f]	2.95[f]	No[f]	-
2. SEMIVOLATILE ORGANIC COMPOUNDS (BNAs)							
POLYCYCLIC AROMATIC HYDROCARBONS (PAHs) AND HEXACHLOROBENZENE							
Acenaphthene	3.42	1.55×10^{-3}	9.20×10^{-5}	4.6×10^{3}	4.00	Negligible	-
Anthracene	4.50×10^{-2}	1.95×10^{-3}	1.02×10^{-3}	1.4×10^{4}	4.45	Negligible	No
Benzo(a)pyrene	1.20×10^{-3}	5.60×10^{-9}	1.55×10^{-6}	5.50×10^{6}	6.06	Negligible	No
Fluoranthrene	2.06×10^{-1}	5.00×10^{-4}	6.46×10^{-6}	3.80×10^{4}	4.90	-	No
Fluorene	1.69	7.19×10^{-4}	6.42×10^{-5}	7.30×10^{3}	4.20	-	No
Pyrene	1.32×10^{-1}	2.50×10^{-4}	5.04×10^{-4}	3.80×10^{4}	4.88	-	No
Hexachlorobenzene	6.00×10^{-3}	1.09×10^{-5}	6.81×10^{-4}	3.90×10^{3}	5.23	-	No
Phenanthrene	1.00	6.80×10^{-4}	1.59×10^{-4}	1.40×10^{4}	4.46	Negligible	No
2-Methylnaphthalene	25.4	2.70×10^{-2}	4.99×10^{-4}	940	3.29	-	No
Indeno(1,2,3-c,d)pyrene	5.30×10^{-4}	1.00×10^{-10} (20°C)	6.95×10^{-8}	1.6×10^{6}	6.51	-	No
Benzo(g,h,i) perylene	7.00×10^{-4}	1.03×10^{-10}	5.34×10^{-8}	1.60×10^{6}	6.51	-	No
Dibenzofuran	-	-	-	-	-	-	-

TABLE 4-1 (Cont'd)

HOOKER/RUCO SITE
ENVIRONMENTAL FATE AND TRANSPORT PARAMETERS: ORGANICS

	WATER[a] SOLUBILITY (mg/l)	VAPOR[a] PRESSURE (mm Hg)	HENRY'S LAW[a] CONSTANT (atm-m^3/mol)	K_{oc} [a] (l/kg)	Log[a] K_{ow}	Susceptible to Photolysis[b]	Susceptible to Hydrolysis[b]
PHTHALATE ESTERS							
Di-n-butyl phthalate	1.30×10^{1}	1.00×10^{-5}	2.82×10^{-7}	1.70×10^{5}	5.60	Negligible	Slight
Di-n-octyl phthalate	3.0[e]	1.40×10^{-4}[e]	1.70×10^{-5}[e]	3.6×10^{9}[e]	9.87	Negligible	Slight
Bis(2-ethylhexyl) phthalate (DEHP)	0.4	2.0×10^{-7} (20°C)	3.00×10^{-7}	2.00×10^{9}	9.61	Negligible	Negligible
PHENOLIC COMPOUND							
4-Methylphenol	2.40×10^{4}[c] (40°C)	1.10×10^{-1}[c]	-	54[d]	1.94[c]	-	-
OTHER BNAs							
Benzoic Acid	2.90×10^{3}[b] (18°C)	-	-	46[d]	1.87[c]	-	-
N-nitrosodiphenylamine	40[e]	0.1[e]	6.60×10^{-4}[e]	6.48[e]	-	Yes	No
3. PESTICIDES AND PCBS							
Beta-BHC	5[b]	2.8×10^{-7}	-	-	-	Negligible	No
Alpha-Chlordane	0.056-1.85[b] (25°C)	1.0×10^{-5}[b]	-	-	2.78[b]	No	No
4,4'-DDD	2.00×10^{-3}[b]	1×10^{-4}[b]	-	-	6.0[b]	-	Negligible
4,4'-DDE	4.00×10^{-2}	6.50×10^{-4}	6.80×10^{-5}	4.40×10^{6}	7.00	Yes	Negligible
4,4'-DDT	5.00×10^{-3}	5.50×10^{-4}	5.13×10^{-4}	2.43×10^{5}	6.19	Yes	Negligible
Heptachlor epoxide	3.50×10^{-1}	3.00×10^{-4}	4.39×10^{-4}	2.20×10^{2}	2.70	-	No
Aroclor 1248	5.40×10^{-2}	4.94×10^{-4}	3.60×10^{-3}	2.77×10^{5}	5.76	-	No
Aroclor 1254	3.10×10^{-2}	7.71×10^{-5}	2.60×10^{-3}	5.30×10^{5}	6.04	-	No

TABLE 4-1 (Cont'd)

HOOKER/RUCO SITE
ENVIRONMENTAL FATE AND TRANSPORT PARAMETERS: ORGANICS

(a) USEPA, 1986
(b) Clement Associates, (1985)
(c) SRI (1982)
(d) Calculated from log K_{oc} - log K_{ow} regression (Karickhoff et al., 1979)
(e) USEPA (1979)
- Data not available.

TABLE 4-2

HOOKER/RUCO SITE
SUMMARY OF BEHAVIORAL CHARACTERISTICS THAT CONTROL
ENVIRONMENTAL FATE AND TRANSPORT OF CLASSES OF ORGANIC COMPOUNDS

	Aqueous Solubility	Volatility	Adsorptive Affinity	Bioaccumulation	Biodegradation/ Biotransformation	Photolysis Susceptibility	Hydrolysis Susceptibility	Oxidation
VOLATILE ORGANIC COMPOUNDS (VOCs)								
Halogenated VOCs	High to V. High	High to V. High	V. Low	V. Low	Low	V. Low	V. Low	V. Low
Non-halogenated VOCs	High to V. High	High to V. High	V. Low	V. Low	High to V. High	V. Low	V. Low	V. Low
SEMIVOLATILE ORGANIC COMPOUNDS (BNAs)								
Phenolic Compounds	Medium to High	Medium	Low to Medium	V. Low	High	V. Low	Low	Medium
Phthalate Esters	Medium	Low	High to V. High	Low	High	Low	Low	V. Low
PAHs	Low	Low	High	V. Low	Medium to High	Low	V. Low	Low
Other BNA[1]								
• Benzoic Acid	High	V. Low	Medium	Medium	-	Low	Medium	Low
• Nitrosamines	Medium	Medium	Medium	-	-	-	V. Low	-
PESTICIDES	Low to Medium	Low	Low to V. High	Medium to V. High	Low	Low	V. Low	Low
PCBs	V. Low	V. Low	V. High	V. High	V. Low to Medium	Low	V. Low	V. Low

[1] Characteristics of some individual compounds, marked by "-", are not available.

HKR 001 1500

E1337.LYN

TABLE 4-3

HOOKER/RUCO SITE
SUMMARY OF ENVIRONMENTAL FATE AND TRANSPORT PARAMETERS: INORGANIC

		Mobility Under pH Conditions [d]			Immobilization Factors [d]		
Element	K_d [a] (l/kg)	Acid < 5.5	Neutral 5.5 - 7.0	Alkaline > 7.0	Fe/Mn Oxides	Organic Matter	Other
Antimony	45	Low	Low	Low	Yes	-	Sulfide; reducing condition
Arsenic	200	Medium	Medium	Medium	Yes	-	Sulfide; clay
Barium	60	Low	Low	Low	-	-	Sulfate; reducing conditions carbonate; clay
Beryllium	650	Low	Low	Low	Yes	Yes	Clay
Cadmium	6.5	Medium	Medium	Medium	-	-	Reducing conditions
Chromium	850	V. Low	V. Low	V. Low	-	-	-
Cobalt	45	High	Medium	V. Low to Low	Yes	-	-
Copper	35	High	Medium to Low	V. Low	Yes	Yes	Sulfide; adsorption
Iron	25	High to V. Low	V. Low to Medium	V. Low	Yes	-	Oxidizing conditions
Lead	900	Low	Low	Low	-	-	Insoluble carbonate, sulfate, phosphate; reducing conditions
Manganese	65	High	High	High to V. Low	Yes	-	Clays
Mercury (aq)	10	Medium	Low	Low	Yes	-	Sulfide
Mercury (vap)	-	High	High	High	-	-	-
Nickel	150	High	Medium to Low	V. Low	-	-	Sulfide; adsorption; silicate minerals
Selenium	300	High	High	V. High	Yes	-	Reducing conditions, adsorption
Silver	45	High	Medium to Low	V. Low	Yes	Yes	Reducing conditions, sulfide
Vanadium	1000	High	High	V. High	-	-	Silicate minerals; reducing conditions; adsorption
Zinc	40	High	High to Medium	Low to V. Low	Yes	Yes	Sulfide; carbonate; phosphate

TABLE 4-3

HOOKER/RUCO SITE
SUMMARY OF ENVIRONMENTAL FATE AND TRANSPORT PARAMETERS: INORGANICS

(a) Generalized soil-water distribution coefficient (K_d) from Baes et al. (1984). Higher values indicate a greater tendency to associate with solid phases.
(b) USEPA, 1979.
(c) Some organocupric and organoplombic complexes may be photosensitive.
(d) Hoffman (1988); Levinson (1980). The listed tendencies apply primarily to aerobic conditions.
(-) Not available.

HKR 001 1503

5.0 IDENTIFICATION OF EXPOSURE PATHWAYS

The purpose of this section is to identify the most significant potential pathways through which individuals may be exposed to the contaminants of concern in various media on the Hooker/Ruco site. Information from the RI report used in developing potential exposure pathways includes sample analysis results on groundwater, sump surface water, sump sediments, surface and subsurface soil, soil gas and air, as well as descriptions of the climate, surface and groundwater hydrology and current land use from the site characterization section. In identifying these pathways, both current and future land use of the site and surrounding area will be considered. An exposure pathway is composed of the following elements (RAGS, 1989):

- A source and mechanism of chemical release to the environment;
- An environmental transport medium (e.g., groundwater) for the released chemical and/or mechanism of transfer of the chemical from one medium to another;
- A point of potential contact by humans or animals with the contaminated medium; and
- A route of exposure (i.e., inhalation, ingestion and dermal contact).

In this report, pathways are identified for the No Action alternative, assuming no additional site remediation occurs other than the excavation and removal of soils with greater than 10 ppm of PCBs in the "Therminol spill area", which was completed in September 1992. It will be assumed that the soil excavation and removal reduces levels of other contaminants in the PCB spill area to zero. This report also assumes that no additional restrictions to site access or use exist. The goal is to determine whether it is feasible for individuals to enter the site areas or engage in activities resulting in exposure to site-related contaminants.

There are three general routes through which individuals could potentially be exposed to chemical contamination at the Hooker/Ruco site; inhalation, ingestion, and dermal contact. The following sections describe potential pathways relevant to each environmental medium associated with the areas under study, for which there is data available, under both the present and potential future-use scenarios. An identified pathway does not imply that exposures are actually occurring, only that the potential exists for the pathway to be complete.

The analyzed exposure pathways are based upon data gathered in the Remedial Investigation. Data from previous investigations were also reviewed, although they will not be included in the quantitative risk analysis.

Figure 5-1 summarizes the exposure pathways illustrating potential contaminant pathways from their sources to receptors. Past and current industrial activities at the Hooker/Ruco site are considered to be the primary source of contaminants detected in the media samples. The on-site soil has been contaminated both by accidental spills and routine discharges from the production plants. Chemical contaminants percolate through surface and subsurface soils to groundwater. Volatile organic compounds in the soils may volatilize to the ambient air and be inhaled. Contaminants may also adsorb to soil particles, and come into direct contact with skin, be ingested, or inhaled in fugitive dust. These are all potential pathways of exposure for this site.

The only surface water on the site is in the recharge basins (sumps). In the past, production wastewater and stormwater runoff was discharged to the sumps. Stormwater runoff and non-contact cooling water is still being discharged to one or more remaining sumps. Volatile compounds in the sump surface water may be released to ambient air, and contaminants settle out in the basins, impacting sediment and acting as a continuing source of groundwater contamination. Section 4.0 includes a detailed discussion of contaminant fate and transport.

Groundwater has been impacted by contamination from this site, but is not currently in use at the plant. It will be assumed for future use scenarios that a residential receptor for groundwater is established at the fenceline. Off-site groundwater will be addressed in a separate operable unit, and the resultant risks will not be considered in this Risk Assessment.

Based on preliminary analysis, the media-specific exposure pathways most likely to be of concern to human health are identified below:

- Ingestion of/dermal contact with/inhalation of contaminated site surface soil by on-site workers and child trespassers.

- Ingestion of/dermal contact with/inhalation of contaminated surface and subsurface soil during construction of proposed on-site wastewater treatment plant by construction workers.

- Dermal contact with sump surface water by child trespassers and site workers.

- Ingestion of/dermal contact with/inhalation of sediment by child trespassers and site workers.

- Ingestion of/dermal contact with/inhalation of groundwater by future residents at the fencelines.

- Ingestion/inhalation of contaminated soil by local residents.

5.1 PRESENT USE EXPOSURE PATHWAYS

The Hooker/Ruco site is an active manufacturing facility, with on-site workers having potential exposure not only to contamination from past disposal practices, but also to the current materials used in the processing plants. Workers are potentially exposed to air contaminants from direct plant emissions (which will not be included in the quantitative risk analysis), as well as volatilization from soil, surface water and sediments via inhalation. They are also subject to exposure to contaminated soils via inhalation or ingestion of fugitive dust, and direct contact pathways. During maintenance activities, the site workers also have potential exposure to sump surface water and/or sediment contaminants via the dermal contact pathway, and may ingest or inhale the sediment dust during these activities. Both cadmium and PCBs were detected on-site, and potential carcinogenic risks from dermal contact exposure can be quantified for these contaminants.

Nearby residents and child trespassers on the site may be exposed to chemical contaminants via air and fugitive dust inhalation, as well as soil dust ingestion pathways. Child trespassers may also ingest sediment and come into direct contact with soils, surface water and sediment. These will all be considered complete pathways in the Risk Assessment.

Ruco Polymer Corporation has contracted truck drivers, salespeople, and other workers entering the site. These workers may be exposed to the chemicals of concern by air and soil dust inhalation, and soil dust ingestion pathways. There are other nearby businesses, including the car dealer storing vehicles on-site, that may also have incidental exposure. For the purposes of the Risk Assessment, on-site workers will represent these other occupational exposures, as the on-site workers are likely at greatest risk.

5.2 FUTURE USE EXPOSURE PATHWAYS

The present use exposure scenarios via all pathways previously identified will be assumed to extend indefinitely into the future in the exposure analysis. It is expected that the site use will remain the same for an indefinite period of time, and local land use patterns (mixed residential/commercial/industrial) are not expected to change. The area is largely developed and land use is established.

Additional future exposure scenarios include potential pathways related to planned wastewater treatment plant construction at the site. Subsurface soil dermal contact, inhalation, and ingestion are potential pathways for future construction workers. Exposure to sump surface water and sediment is also possible. This wastewater treatment plant is proposed to be built in the area of Sump #1.

Also included as a future use exposure scenario is residential land use at the site fenceline, with potential for private wells to be drilled immediately off-site, as requested by the EPA Remedial Project Manager. Therefore, residential groundwater ingestion, inhalation, and dermal contact; and soil inhalation, ingestion and dermal contact are also considered completed future use pathways. This provides an analysis of potential risks from local groundwater use, which is not only appropriate for this assessment, but also indicates whether the potential impact of off-site groundwater should be investigated.

Table 5-1 illustrates the present and future use exposure pathway scenarios that will be considered in the Risk Assessment with the degree of assessment and rationale for selection or exclusion.

HKR 001 1507

FIGURE 5-1

Hooker / Ruco Site Risk Assessment Exposure Pathways

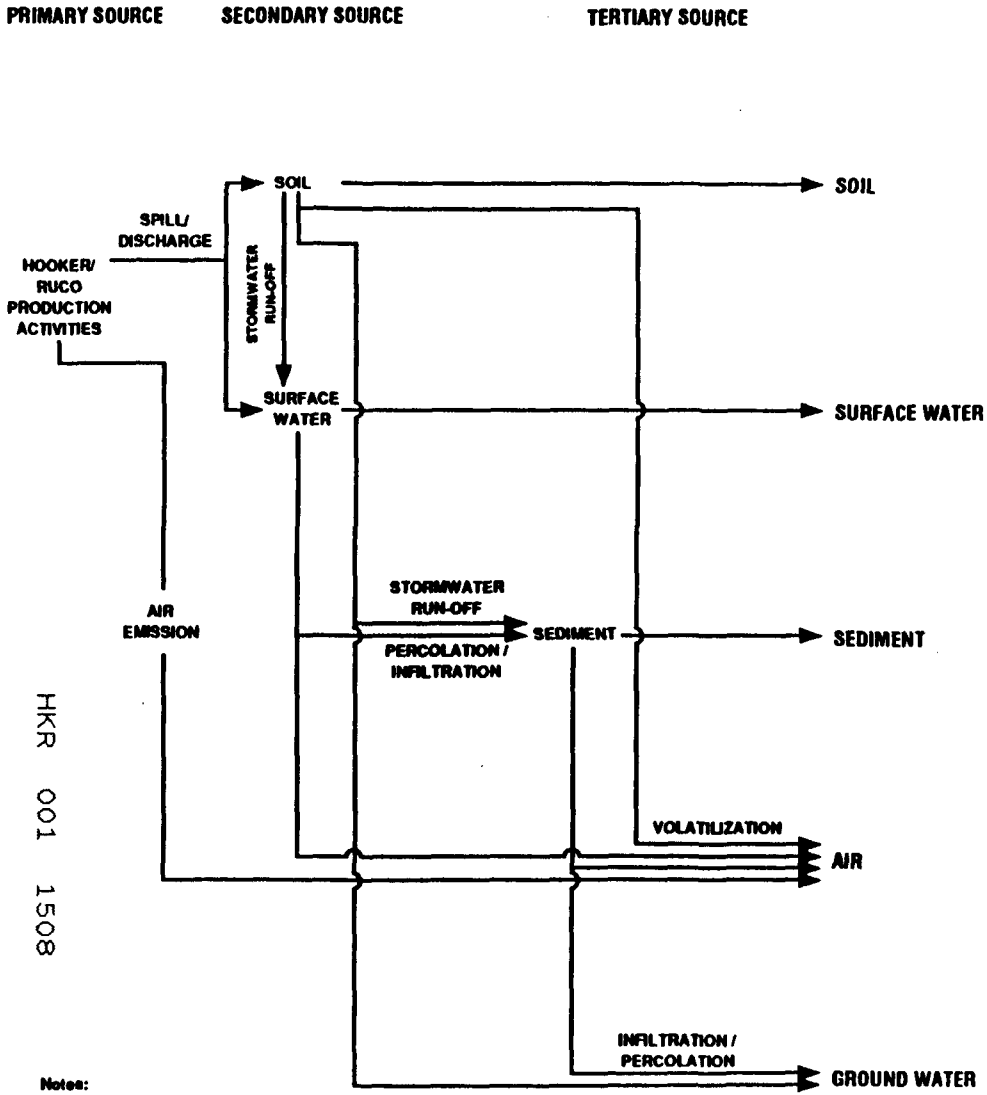

	PRESENT USE RECEPTORS				FUTURE USE RECEPTORS				
	RESIDENTS*				RESIDENTS*				
	SW	CH	AD	TRESPASSER	SW	CW	CH	AD	TRESPASSER
INGESTION	●			●	●	●			●
DERMAL**	●			●	●	●			●
INHALATION	●	●	●	●	●	●	●	●	●
INGESTION									
DERMAL	●			●	●				●
INHALATION									
INGESTION	●			●	●				●
DERMAL**	●			●	●				●
INHALATION	●			●	●				●
INGESTION									
DERMAL									
INHALATION	●	●	●	●	●	●	●	●	●
INGESTION							●	●	
DERMAL							●	●	
INHALATION							●	●	

Notes:
SW - Site Worker
CW - Construction Worker
CH - Children
AD - Adults

* Present use includes off-site residents only. Future use includes off-site and fenceline residents.

** Soil and sediment dermal exposure pathway consider cadmium and PCBs only.

HKR 001 1508

EPA 2071.162/940 (4/92)

TABLE 5-1
HOOKER/RUCO SITE EXPOSURE PATHWAY ANALYSIS

Pathway	*Receptor*	*Timeframe Evaluated*		*Degree of Assessment*		*Rationale for Selection or Exclusion*
		Present	Future	Quant.	Qual.	
GROUND WATER						
Ingestion	Adult/Child Resident	No	Yes	X		Affected aquifer assumed to be future water supply, with private wells in use.
Inhalation	Adult/Child Resident	No	Yes	X		VOAs detected in water supply aquifer.
Dermal Contact	Adult/Child Resident	No	Yes	X		Contaminants detected in water supply aquifer.
SURFACE WATER						
Dermal Contact	Site Worker	Yes	Yes	X		Contaminants detected in sump surface water. Dermal contact is assumed to occur during work.
	Child Trespasser	Yes	Yes	X		Direct dermal contact assumed to occur during play.
SEDIMENT						
Ingestion	Site Worker	Yes	Yes	X		Incidental sediment ingestion assumed to occur during work.
	Child Trespasser	Yes	Yes	X		Incidental sediment ingestion assumed to occur during play.
Inhalation	Site Worker	Yes	Yes	X		VOAs detected in sump sediment. Inhalation of VOAs/dust assumed to occur during maintenance work.
	Child Trespasser	Yes	Yes	X		Inhalation assumed to occur during play.
Dermal Contact	Site Worker	Yes	Yes	X		PCBs and cadmium detected in sediment. Dermal contact assumed to occur during maintenance work.
	Child Trespasser	Yes	Yes	X		Dermal contact assumed to occur during play.

HKR 001 1509

TABLE 5-1
HOOKER/RUCO SITE EXPOSURE PATHWAY ANALYSIS

Pathway	*Receptor*	*Timeframe Evaluated*		*Degree of Assessment*		*Rationale for Selection or Exclusion*
		Present	Future	Quant.	Qual.	
SURFACE SOIL						
Ingestion	Construction Worker	No	Yes	X		Incidental soil ingestion assumed to occur during proposed wastewater treatment plant construction.
	Site Worker	Yes	Yes	X		Incidental soil ingestion assumed to occur during work.
	Child Trespasser	Yes	Yes	X		Incidental soil ingestion assumed to occur during play.
Inhalation	Construction Worker	No	Yes	X		VOAs detected in surface soil. Inhalation of VOAs/dust assumed to occur during proposed wastewater treatment plant construction.
	Site Worker	Yes	Yes	X		Inhalation of VOAs/dust assumed to occur during work.
	Child Trespasser	Yes	Yes	X		Inhalation of VOAs/dust assumed to occur during play.
	Off-Site Resident (Child/Adult)	Yes	Yes	X		Inhalation of VOAs/dust assumed to occur at residences.
Dermal Contact	Construction Worker	No	Yes	X		PCBs and cadmium detected in surface soil. Dermal contact assumed to occur during proposed wastewater treatment plant construction.
	Site Worker	Yes	Yes	X		Dermal contact assumed to occur during work.
	Child Trespasser	Yes	Yes	X		Dermal contact assumed to occur during play.

HKR 001 1510

TABLE 5-1
HOOKER/RUCO SITE EXPOSURE PATHWAY ANALYSIS

Pathway	*Receptor*	*Timeframe Evaluated*		*Degree of Assessment*		*Rationale for Selection or Exclusion*
		Present	Future	Quant.	Qual.	
SUBSURFACE SOIL						
Ingestion	Construction Worker	No	Yes	X		Incidental soil ingestion assumed to occur during proposed wastewater treatment plant construction.
Inhalation	Construction Worker	No	Yes	X		Inhalation of VOAs/dust assumed to occur during proposed wastewater treatment plant construction.
Dermal contact	Construction Worker	No	Yes	X		Dermal contact assumed to occur during proposed wastewater treatment plant construction.
AIR						
Inhalation	Site Worker	Yes	Yes		X	Inhalation of VOAs assumed to occur during work.
	Child Trespasser	Yes	Yes		X	Inhalation of VOAs assumed to occur during play.
	Off-Site Resident (Adult/Child)	Yes	Yes		X	Inhalation of VOAs assumed to occur at residences.
	Construction Worker	No	Yes		X	Inhalation of VOAs assumed to occur during proposed wastewater treatment plant construction.

HKR 001 1511

HKR 001 1512

6.0 HAZARD IDENTIFICATION

6.1 HEALTH EFFECTS CRITERIA FOR NONCARCINOGENS

For chemicals that exhibit noncarcinogenic (e.g., systemic) effects, many authorities consider organisms to have repair and detoxification capabilities that must be exceeded by some critical concentration (threshold) before the health effect is manifested. For example, an organ can have a large number of cells performing the same or similar functions that must be significantly depleted before the effect on the organ is seen. This threshold view holds that a range of exposures from just above zero to some finite value can be tolerated by the organism without an appreciable risk of adverse effects.

Health criteria for chemicals exhibiting noncarcinogenic effects for use in risk assessment are generally USEPA reference doses (RfDs) developed by the RfD Work Group. For those chemicals for which the USEPA has not derived verified RfDs, health criteria used in a risk assessment may be derived from information provided in the USEPA Health Effects Assessment Summary Tables (HEAST), IRIS, Office of Drinking Water Health Advisories (HAs), Office of Drinking Water Maximum Contaminant Level Goals (MCLGs), or National Ambient Air Quality Standards (NAAQS). The RfD is expressed in units of mg chemical/kg body weight-day. In general, the RfD is an estimate of an average daily exposure to an individual (including sensitive individuals) below which there will not be an appreciable risk of adverse health effects. The RfD is derived using conservative safety factors (e.g., to adjust from animals to humans and to protect sensitive subpopulations) to ensure that it is unlikely to underestimate the potential for adverse noncarcinogenic effects to occur. The purpose of the RfD is to provide a benchmark against which estimated doses (e.g., those projected from human exposure to various environmental conditions) might be compared. Doses that are significantly higher than the RfD may indicate that an inadequate margin of safety could exist for exposure to that substance and that an adverse health effect could occur.

6.2 HEALTH EFFECTS CRITERIA FOR POTENTIAL CARCINOGENS

For chemicals that exhibit carcinogenic effects, USEPA as well as other scientific authorities recognize that one or more molecular events can evoke changes in a single cell or a small number of cells that can lead to malignancy. This is the non-threshold theory of carcinogenesis, which purports that any level of exposure to a carcinogen can result in some finite possibility of causing cancer. Generally, regulatory agencies assume the non-threshold hypothesis for carcinogens in the absence of information concerning the mechanisms of carcinogenic action for the chemical.

USEPA's Carcinogen Assessment Group (CAG) has developed slope factor estimates (i.e., dose-response values) for estimating excess lifetime cancer risks associated with various levels of lifetime exposure to potential human carcinogens. The slope factor estimate [in units of $(mg/kg\ body\ weight\text{-}day)^{-1}$] is a number which, when multiplied by the lifetime average daily dose of a potential carcinogen (in mg/kg body weight-day), yields the upper-bound lifetime excess cancer risk associated with exposure at that dose. Upper-bound is a term used by USEPA to reflect the conservative nature of the slope factors; risks estimated using slope factors are considered unlikely to underestimate actual risks but they may overestimate actual risks for a given exposure. Excess lifetime cancer risks are generally expressed in scientific notation and are probabilities. An excess lifetime cancer risk of $1x10^{-6}$ (one in one million), for example, represents the incremental probability that an individual will develop cancer as a result of exposure to a carcinogenic chemical over a 70-year lifetime under specified exposure conditions.

In practice, slope factor estimates are derived from the results of human epidemiology studies or chronic animal bioassays. The animal studies must usually be conducted using relatively high doses in order to detect possible adverse effects. Since humans are expected to be exposed at lower doses than those used in the animal studies, the data are adjusted by using mathematical models. The data from animal studies are typically fitted to the linearized multistage model to obtain a dose-response curve.

The 95th percentile upper confidence limit slope of the dose-response curve, subject to various adjustments and an inter-species scaling factor is applied to conservatively derive the slope factor estimate for humans. Dose-response data derived from human epidemiological studies are fitted to dose-time-response curves on an ad-hoc basis. These models provide rough, but reasonable, estimates of the upper limits on lifetime risk. Slope factor estimates based on human epidemiological data are also derived using very conservative assumptions and, as such, they too are considered unlikely to underestimate risks.

Therefore, while the actual risks associated with exposures to potential carcinogens are unlikely to be higher than the risks calculated using a slope factor estimate, they could be considerably lower (if exposure estimates are conservative).

In addition, there are varying degrees of confidence in the weight of evidence for carcinogenicity of a given chemical. USEPA (1989) has proposed a system for characterizing the overall weight of evidence for a chemical's carcinogenicity based on the availability of animal, human and other supportive data. The weight-of-evidence classification is an attempt to determine the likelihood

that an agent is a human carcinogen and thus qualitatively affects the estimation of potential health risks. Three major factors are considered in characterizing the overall weight of evidence for carcinogenicity: 1) the quality of evidence from human studies, 2) the quality of evidence from animal studies which are combined into a characterization of the overall weight of evidence for human carcinogenicity and 3) other supportive information which is assessed to determine whether the overall weight of evidence should be modified. USEPA's final classification of the overall weight of evidence has the following five categories:

Group A - Human Carcinogen

This category indicates that there is sufficient evidence from human epidemiological studies to support a causal association between an agent and cancer.

Group B--Probable Human Carcinogen

This category generally indicates that there is at least limited evidence from epidemiological studies of carcinogenicity to humans (Group B1) or that, in the absence of adequate data in humans, there is sufficient evidence of carcinogenicity in animals (Group B2).

Group C--Possible Human Carcinogen

This category indicates that there is limited evidence of carcinogenicity in animals in the absence of data on humans.

Group D--Not Classified

This category indicates that the evidence of carcinogenicity in animals is inadequate.

Group E--No Evidence of Carcinogenicity in Humans

This category indicates that there is no evidence for carcinogenicity in at least two adequate animal tests in different species or in both epidemiological and animal studies.

Slope factors are developed based on epidemiological or animal bioassay data for a specific route of exposure, either oral or inhalation. For some chemicals, such as chloroform and benzene, sufficient data are available to develop route-specific slope factors for inhalation and ingestion exposure routes.

6.3 TOXICOLOGICAL ASSESSMENT

Table 6-1 summarizes the chronic and subchronic oral and inhalation reference doses (RfDs) and slope factors (SFs) used to analyze noncarcinogenic effects and carcinogenic risks for the indicator contaminants. These criteria were taken from June 1992 sessions of the Integrated Risk Information System (IRIS) and Fourth Quarter 1990 Health Effects Assessment Summary Tables (HEAST). Chronic toxicity indices were used for residential exposure to groundwater, surface soil dust, occupational direct contact with sump surface water, sediment, and surface soil.

Subchronic indices were used for all construction worker exposures. Worker exposure to surface and subsurface soils is expected to be short-term, i.e, less than seven years (RAGS, 1989). Subchronic indices were also used for child trespassers exposure to surface water, sediment and surface soil via ingestion and/or inhalation and/or dermal contact. No subchronic indices exist for carcinogens, based on the non-threshold theory of carcinogenesis.

Toxicological profiles for those chemicals that do not have approved toxicity criteria are included in Appendix B.

HKR 001 1516

TABLE 6-1
HOOKER/RUCO SITE
TOXICITY DATA FOR NONCARCINOGENIC
AND POTENTIAL CARCINOGENIC EFFECTS
DOSE RESPONSE EVALUATION

Chemical Name	Noncarcinogen Reference Dose		Subchronic Noncarcinogen Reference Dose		Carcinogen Slope Factor				Compounds w/o Criteria
	RfD(oral) (mg/Kg-day)	RfD(inhalation) (mg/Kg-day)	RfD (oral sub) (mg/Kg-day)	RfD(inhalation, sub) (mg/Kg-day)	Oral SF (mg/Kg-day)-1	Weight	Inhalation SF (mg/Kg-day)-1	Weight	
Volatiles:									
1,1,1-Trichloroethane	9.00E-02	3.00E-01	9.00E-01	3.00E+00	NA	D	NA	D	
1,1,2,2-Tetrachloroethane	NA	NA	NA	NA	2.00E-01	C	2.00E-01	C	
1,1-Dichloroethene	9.00E-03	ND	9.00E-03	ND	6.00E-01	C	1.20E+00	C	
2-Butanone	5.00E-02	9.00E-02	5.00E-01	9.00E-01	NA	D	NA	D	
4-Methyl-2-pentanone	5.00E-02	2.00E-02	NA	NA	NA	NA	NA	NA	
Acetone	1.00E-01	NA	1.00E+00	NA	NA	D	NA	D	
Benzene	NA	NA	NA	NA	2.90E-02	A	2.90E-02	A	
Bromodichloromethane	2.00E-02	ND	2.00E-02	ND	1.30E-01	B2	ND	B2	
Carbon Disulfide	1.00E-01	2.90E-03	1.00E-01	2.90E-03	NA	NA	NA	NA	
Carbon Tetrachloride	7.00E-04	ND	7.00E-03	ND	1.30E-01	B2	1.30E-01	B2	
Chlorobenzene	2.00E-02	5.00E-03	2.00E-01	5.00E-02	NA	D	NA	D	
Chloroform	1.00E-02	NA	1.00E+00	NA	6.10E-03	B2	8.10E-02	B2	
Chloromethane	NA	NA	NA	NA	1.30E-02	C	6.30E-03	C	
Ethylbenzene	1.00E-01	2.90E-01	1.00E+00	2.90E-01	NA	D	NA	D	
Styrene	2.00E-01	ND	2.00E+00	ND	3.00E-02	B2	2.00E-03	B2	
Tetrachloroethene	1.00E-02	NA	1.00E-01	NA	5.10E-02	B2	1.80E-03	B2	
Toluene	2.00E-01	5.70E-01	2.00E+00	2.70E-01	NA	D	NA	D	
Total Xylenes	2.00E+00	8.60E-02	4.00E+00	8.60E-02	NA	D	NA	D	
Trans-1,2-Dichloroethene	2.00E-02	ND	2.00E-01	ND	NA	NA	NA	NA	
Trichloroethene	NA	NA	NA	NA	1.10E-02	B2	1.70E-02	B2	
Vinyl Chloride	NA	NA	NA	NA	1.90E+00	A	2.90E-01	A	

EPA Weight of Evidence Classifications are as follows:

Group A:- Human Carcinogen. Sufficient evidence from epidemiologic studies to support a causal association between exposure and cancer.
Group B1:- Probable Human Carcinogen. Limited evidence of carcinogenicity in human from epidemiological studies.
Group B2:- Probable Human Carcinogen. Sufficient evidence of carcinogenicity in animals. Inadequate evidence of carcinogenicity in humans.
Group C:- Possible Human Carcinogen. Limited evidence of carcinogenicity in animals.
Group D:- Not Classified. Inadequate evidence of carcinogenicity in animals.

Note: All toxicity Values unless otherwise noted are from Integrated Risk Information System (IRIS) June 1992 sessions, and from Health Effects Assessment Summary Tables (HEAST)-1990 4th Quarter (USEPA, 1990).
NA :Not Available
ND : Not Determined

HKR 001 1517

TABLE 6-1
HOOKER/RUCO SITE
TOXICITY DATA FOR NONCARCINOGENIC
AND POTENTIAL CARCINOGENIC EFFECTS
DOSE RESPONSE EVALUATION

Chemical Name	Noncarcinogen Reference Dose		Subchronic Noncarcinogen Reference Dose		Carcinogen Slope Factor				
	RfD(oral) (mg/Kg-day)	RfD(inhalation) (mg/Kg-day)	RfD (oral sub) (mg/Kg-day)	RfD(inhalation, sub) (mg/Kg-day)	Oral SF (mg/Kg-day)-1	Weight	Inhalation SF (mg/Kg-day)-1	Weight	Compounds w/o Criteria
Semi-Volatiles;									
Benzoic Acid	4.00E+00	NA	4.00E+00	NA	NA	D	NA	D	2-Methylnaphthalene
Bis(2-ethylhexyl)phthalate	2.00E-02	ND	2.00E-02	NA	1.40E-02	B2	ND	B2	Benzo (g,h,i) perylene
Butyl benzyl phthalate	2.00E-01	NA	2.00E+00	NA	NA	C	NA	C	4-Methylphenol
Di-n-butyl phthalate	1.00E-01	NA	1.00E+00	NA	NA	D	NA	D	Phenanthrene
Di-n-octyl phthalate	2.00E-02	NA	2.00E-02	NA	NA	NA	NA	NA	Dibenzofuran
Hexachlorobenzene	8.00E-04	ND	8.00E-04	ND	1.60E+00	B2	1.60E+00	B2	
n-Nitrosodiphenylamine	NA	NA	NA	NA	4.90E-03	B2	NA	B2	
Phenol	6.00E-01	NA	6.00E-01	NA	NA	D	NA	D	
Carcinogenic PAHs (1)	NA	NA	NA	NA	5.80E+00	B2	6.10E+00	B2	
Noncarcinogenic PAHs									
Acenaphthene	6.00E-02	NA	6.00E-01	NA	NA	D	NA	D	
Anthracene	3.00E-01	NA	3.00E+00	NA	NA	D	NA	D	
Fluoranthrene	4.00E-02	NA	4.00E-01	NA	NA	NA	NA	NA	
Fluorene	4.00E-02	NA	4.00E-01	NA	NA	D	NA	D	
Naphthalene	4.00E-03	NA	4.00E-02	NA	NA	D	NA	D	
Pyrene	3.00E-02	NA	3.00E-01	NA	NA	D	NA	D	

EPA Weight of Evidence Classifications are as follows:

Group A:- Human Carcinogen. Sufficient evidence from epidemiologic studies to support a causal association between exposure and cancer.
Group B1:- Probable Human Carcinogen. Limited evidence of carcinogenicity in human from epidemiological studies.
Group B2:- Probable Human Carcinogen. Sufficient evidence of carcinogenicity in animals. Inadequate evidence of carcinogenicity in humans.
Group C:- Possible Human Carcinogen. Limited evidence of carcinogenicitiy in animals.
Group D:- Not Classified. Inadequate evidence of carcinogenicity in animals.

Note: All toxicity Values unless otherwise noted are from Integrated Risk Information System (IRIS) June 1992 sessions, and from Health Effects Assessment Summary Tables (HEAST)-1990 4th Quarter (USEPA, 1990).

(1). All carcinogenic PAHs are evaluated as Benzo(a)pyrene

NA :Not Available
ND : Not Determined

HKR 001 1518

TABLE 6-1
HOOKER/RUCO SITE
TOXICITY DATA FOR NONCARCINOGENIC
AND POTENTIAL CARCINOGENIC EFFECTS
DOSE RESPONSE EVALUATION

Chemical Name	Noncarcinogen Reference Dose		Subchronic Noncarcinogen Reference Dose		Carcinogen Slope Factor				Compounds w/o Criteria
	RfD(oral) (mg/Kg-day)	RfD(inhalation) (mg/Kg-day)	RfD (oral sub) (mg/Kg-day)	RfD(inhalation, sub) (mg/Kg-day)	Oral SF (mg/Kg-day)-1	Weight	Inhalation SF (mg/Kg-day)-1	Weight	
PCBs And Pesticide:									
4,4'-DDD	NA	NA	NA	NA	2.40E-01	B2	NA	B2	
4,4'-DDE	NA	NA	NA	NA	3.40E-01	B2	NA	B2	
4,4'-DDT	5.00E-04	NA	5.00E-04	NA	3.40E-01	B2	3.40E-01	B2	
Beta-BHC	NA	NA	NA	NA	1.80E+00	C	1.80E+00	C	
Chlordane (2)	6.00E-05	ND	6.00E-05	ND	1.30E+00	B2	1.30E+00	B2	
Dieldrin	5.00E-05	NA	5.00E-05	NA	1.60E+01	B2	1.60E+01	B2	
Heptachlor Epoxide	1.30E-05	NA	5.00E-04	NA	9.10E+00	B2	9.10E+00	B2	
Total PCBS (3)	ND	ND	NA	NA	7.70E+00	B2	ND	B2	

EPA Weight of Evidence Classifications are as follows:

Group A:- Human Carcinogen. Sufficient evidence from epidemiologic studies to support a causal association between exposure and cancer.
Group B1:- Probable Human Carcinogen. Limited evidence of carcinogenicity in human from epidemiological studies.
Group B2:- Probable Human Carcinogen. Sufficient evidence of carcinogenicity in animals. Inadequate evidence of carcinogenicity in humans.
Group C:- Possible Human Carcinogen. Limited evidence of carcinogenicitiy in animals.
Group D:- Not Classified. Inadequate evidence of carcinogenicity in animals.

Note: All toxicity Values unless otherwise noted are from Integrated Risk Information System (IRIS) June 1992 sessions, and from Health Effects Assessment Summary Tables (HEAST)-1990 4th Quarter (USEPA, 1990).

NA :Not Available
ND : Not Determined

(2) Alpha chlordane is evaluated as chlordane.
(3) All PCBs are evaluated as Aroclor 1260

HKR 001 1519

TABLE 6-1
HOOKER/RUCO SITE
TOXICITY DATA FOR NONCARCINOGENIC
AND POTENTIAL CARCINOGENIC EFFECTS
DOSE RESPONSE EVALUATION

Chemical Name	Noncarcinogen Reference Dose		Subchronic Noncarcinogen Reference Dose		Carcinogen Slope Factor				Compounds w/o Criteria
	RfD(oral) (mg/Kg-day)	RfD(inhalation) (mg/Kg-day)	RfD (oral sub) (mg/Kg-day)	RfD(inhalation, sub) (mg/Kg-day)	Oral SF (mg/Kg-day)-1	Weight	Inhalation SF (mg/Kg-day)-1	Weight	
Inorganics:									
Antimony	4.00E-04	NA	4.00E-04	NA	NA	NA	NA	NA	Cobalt
Arsenic	3.00E-04	NA	1.00E-03	NA	1.75E+00	A	1.50E+01	A	Copper
Barium	7.00E-02	1.00E-04	5.00E-02	1.00E-03	NA	NA	NA	NA	Iron
Beryllium	5.00E-03	NA	5.00E-03	NA	4.30E+00	B2	8.40E+00	B2	Lead
Cadmium	1.00E-03food 5.00E-04water	NA	NA	NA	NA	B1	6.30E+00	B1	
Chromium (III)	1.00E+00	NA	1.00E+00	NA	NA	NA	NA	NA	
Chromium (VI)	5.00E-03	NA	2.00E-02	NA	NA	NA	4.20E+01	A	
Manganese	1.00E-01	1.10E-04	1.00E-01	1.10E-04	NA	D	NA	D	
Mercury	3.00E-04	8.60E-05	3.00E-04	8.60E-05	NA	D	NA	D	
Nickel	2.00E-02	NA	2.00E-02	NA	NA	A	8.40E-01	A	
Selenium	5.00E-03	NA	NA	NA	NA	D	NA	D	
Silver	3.00E-03	NA	3.00E-03	NA	NA	D	NA	D	
Thallium	8.00E-05	NA	7.00E-04	NA	NA	D	NA	D	
Vanadium	7.00E-03	NA	7.00E-03	NA	NA	NA	NA	NA	
Zinc	2.00E-01	NA	2.00E-01	NA	NA	D	NA	D	

EPA Weight of Evidence Classifications are as follows:

Group A:- Human Carcinogen. Sufficient evidence from epidemiologic studies to support a causal association between exposure and cancer.
Group B1:- Probable Human Carcinogen. Limited evidence of carcinogenicity in human from epidemiological studies.
Group B2:- Probable Human Carcinogen. Sufficient evidence of carcinogenicity in animals. Inadequate evidence of carcinogenicity in humans.
Group C:- Possible Human Carcinogen. Limited evidence of carcinogenicity in animals.
Group D:- Not Classified. Inadequate evidence of carcinogenicity in animals.

Note: All toxicity Values unless otherwise noted are from Integrated Risk Information System (IRIS) June 1992 sessions, and from Health Effects Assessment Summary Tables (HEAST)-1990 4th Quarter (USEPA, 1990).
NA :Not Available
ND : Not Determined

HKR 001 1520

SECTION 7.0

7.0 HEALTH RISK CHARACTERIZATION

According to guidelines for preparing risk assessments for RI/FS purposes, the potential adverse effects on human health should be assessed where possible by comparing chemical concentrations found in environmental media at or near the site and at receptor locations with applicable or relevant and appropriate requirements (ARARs) or other guidance to be considered (TBCs) that has been developed for the protection of human health or the environment. This section presents comparisons to both ARARs and TBCs.

7.1 HEALTH-BASED APPLICABLE OR RELEVANT AND APPROPRIATE REQUIREMENTS (ARARs)

ARARs or other guidance are first identified for the chemicals of potential concern. Where chemical-specific or ambient ARARs are available for an environmental medium, they are compared with average and maximum concentrations observed in that medium at points of potential exposure. USEPA interim guidance on ARARs (USEPA, 1987) defines them as follows:

"Applicable requirements" means those cleanup standards, standards of control, and other substantive environmental protection requirements, criteria, or limitations promulgated under Federal or State law that specifically address a hazardous substance, pollutant, contaminant, remedial action, location, or other circumstance at a CERCLA site. "Applicability" implies that the remedial action or the circumstances at the site satisfy all of the jurisdictional prerequisites of a requirement.

"Relevant and appropriate requirements" mean those cleanup standards, standards of control, and other substantive environmental protection requirements, criteria, or limitations promulgated under Federal or State law that, while not "applicable" to a hazardous substance, pollutant, contaminant, remedial action, location, or other circumstance at a CERCLA site, address problems or situations sufficiently similar to those encountered at the CERCLA site that their use is well suited to a particular site.

The relevance and appropriateness of a requirement can be judged by comparing a number of factors, including the characteristics of the remedial action, the hazardous substances in question, or the physical circumstances of the site, with those addressed in the requirement. It is also helpful to look at the objective and origin of the requirement. For example, while RCRA regulations are not applicable to closing undisturbed hazardous waste in place, the RCRA regulation for closure by capping may be deemed relevant and appropriate.

A requirement that is judged to be relevant and appropriate must be complied with to the same degree as if it were applicable. However, there is more discretion in this determination: it is possible for only part of a requirement to be considered relevant and appropriate, the rest being dismissed if judged not to be relevant and appropriate in a given case.

Non-promulgated advisories or guidance documents issued by federal or state governments do not have the status of potential ARARs. However, they may be considered in determining the necessary level of cleanup for protection of health or the environment.

Only those ARARs or advisories or guidance that are ambient or chemical-specific requirements [i.e., those requirements which "set health or risk-based concentration limits or ranges in various environmental media for specific hazardous substances, pollutants, or contaminants" (USEPA, 1987)], as opposed to ARARs which are classified as action-specific or locational requirements, are used in this risk assessment.

The classes of ambient or chemical-specific health-based ARARs or guidance that are considered pertinent to the risk assessment for the site are discussed below.

According to guidelines for preparing risk assessments for RI/FS purposes, the potential adverse effects on human health should be assessed where possible by comparing chemical concentrations found in environmental media at or near the site and at receptor locations with applicable or relevant and appropriate requirements (ARARs) or other guidance that has been developed for the protection of human health or the environment. Thus this section presents a comparison to both ARARs and TBCs.

7.2 GROUNDWATER CONTAMINATION COMPARED WITH ARARs

Chemical-specific ARARs for indicator compounds detected on-site are presented in Table 7-1. The contaminants chlorobenzene, trans-1,2-dichloroethene, trichloroethene, vinyl chloride, 4-methyl-2-pentanone, acetone, total xylenes, bis(2-ethyhexyl)phthalate, antimony, arsenic, beryllium, cadmium, chromium and nickel are present in the groundwater on-site at levels exceeding ARARs (either Federal or State MCLs). As discussed previously, off-site groundwater will be addressed in a separate operable unit, and is not considered here.

7.3 SURFACE WATER CONTAMINATION COMPARED WITH ARARs

Table 7-1 also illustrates surface water chemical-specific ARARs. Due to the limited number of samples and criteria, only bis(2-ethylhexyl)phthalate, aluminum and mercury were identified as exceeding surface water criteria. It should be noted that the only surface water on or in

proximity of the site is in the constructed sumps, and therefore the criteria are not applicable requirements. They are presented for comparison only.

7.4 SOIL AND SEDIMENT TBCs

Soil and sediment clean-up objectives are presented for the purpose of EPA's final risk management decision from a comparison of metals in soil background levels and New York State Department of Environmental Conservation (NYSDEC) Sediment Criteria for human health. The concentrations of surface and subsurface soil metals, including arsenic, cadmium, chromium, copper, lead, magnesium, mercury and nickel exceed New York State background soil concentrations for general soils. In surface soil only, beryllium, iron and zinc were detected at levels higher than background.

The New York State Department of Environmental Conservation has proposed standards for soil cleanup, based on HEAST soil ingestion numbers. While these have not been promulgated, and the Department states that site-specific risk assessments to determine soil cleanup numbers will probably be required, a comparison of organic surface soil contaminants with the proposed standards reveals several chemicals are elevated above these health-based criteria. They include carbon tetrachloride, chloroform, tetrachloroethene, trichloroethene, benzo(a)anthracene, benzo(a)pyrene, benzo(b)flouranthene, benzo(k)fluoranthene, hexachlorobenzene, bis(2-ethylhexyl)phthalate, di-n-octyl phthalate, 4,4-DDD, 4,4-DDT, heptachlor epoxide, and PCBs.

Sediments in the sumps exceed current NYSDEC criteria for trichloroethene and PCBs. It should be noted that the sump sediments are not part of a natural surface water system, and the criteria are not applicable. They are presented for comparison only.

7.5 ESTIMATION OF EXPOSURE POINT CONCENTRATIONS

Estimates of exposure point concentrations are needed as part of the quantitative risk evaluations since these estimates are used along with the exposure scenarios to estimate chronic daily intake and subsequent human health risks.

Estimation of exposure point concentrations for all ingestion, dermal contact and soil inhalation pathways are based on measured concentrations of the indicator compounds. The representative exposure point concentration was taken as the 95 percent UCL (or the maximum measured concentration if the UCL exceeds the maximum) of the compound for the matrix in question. The UCL was calculated using current USEPA Region II criteria and RAGS (1989) from the average, variance and standard error of the natural log transformed data using the following equation:

$$UCL = EXP\ [x + 0.5S^2 + HS_e]$$

where x is the average of the natural log transformed data, S^2 is the variance on the transformed data, S_e is the standard error on the transformed data and H is the t-value for the transformed data (The latter value differs from the tabulated t-values because of the natural log transformation of the data.). The calculations for PCBs and carcinogenic PAHs were based on detected concentrations only. The calculations for all other analyses for a given compound in a given matrix included the non-detect analyses evaluated at one-half of the sample specific detection limit. This is considered a reasonable and conservative, representative concentration for non-detect results.

7.6 EXPOSURE POINT CONCENTRATION MODELING

Estimation of exposure point concentrations for all ingestion and dermal contact pathways are based on measured concentrations of the contaminants of concern. In accordance with RAGS (1989), the exposure point concentration was taken as the 95% UCL of all the analyses for the matrix in question in a given area. For those compounds where the maximum detected value was less than the 95% UCL, the maximum detected value was used.

For pathways that involved exposure via the inhalation of volatile contaminants while showering, a contaminant release and transport model was required to estimate the exposure point concentrations of indicator contaminants. The model used to estimate concentrations of volatiles in bathroom air is that of Foster and Chrostowski (1987). The quantity of airborne volatiles inhaled while in the shower requires the estimation of the rate of chemical released from the water into the air, and buildup of volatiles while the shower is on, and decay after it is turned off. The rate of release into the air is based on Liss and Slater's (1974) adaptation of the two-film gas-liquid mass transfer theory. An integrated rate equation based on a mass balance approach is used. Then, the volatile generation rate in the shower room is calculated and volatile air concentrations estimated.

7.7 ESTIMATION OF PATHWAY-SPECIFIC PARAMETERS

In this section, parameters are defined for each of the exposure pathways presented in Section 5.0. These parameters are specific to each exposure scenario and will be used along with the exposure point concentrations previously defined to determine daily chronic or subchronic intake rates for each of the indicator contaminants. One set of parameters is defined for each exposure pathway for the conservative reasonable maximum exposure case. As discussed in Section 5.0, exposure pathways were defined for each matrix for several populations under present use and potential future use scenarios. Parameters specific to each exposure pathway were developed for each population as appropriate for present use and future use scenarios under reasonable

defined in detail in Table 7-2. For the evaluation of present-use risks to human health, present-use conditions are assumed to continue indefinitely into the future. The future-use conditions are evaluated assuming that the proposed changes in site utilization, once implemented, continue indefinitely into the future.

Exposure Frequency Parameters

Age-specific exposure parameter distributions were developed for each exposed population to account for variation in exposure over an individual's lifetime for each exposure scenario. These distributions were largely based on data contained in the Risk Assessment Guidance for Superfund (RAGS, 1989). Basically, two age groups were specified for noncarcinogens; ages 0-17 years (children) and ages 18-70 years (adults). For carcinogens only, a six-year exposure rate was assumed for children (USEPA Region II criteria). Another age group specified for trespassers, 8-14 years, was considered to be the age of children who would go to the site independently.

Residential exposure durations were considered to be the years spent at one residence based on government estimates. Construction worker exposure was assumed to be one year. Noncarcinogenic hazard index values were calculated for each group, but were not considered to have additive effects over a lifetime. Frequencies of exposure to contaminants for the various populations were developed based on RAGS (1989), site-specific information, and upon examination of potential recreational and developmental uses.

The number of days per year that an individual might be exposed to site contamination varied depending upon matrix, age, vocation and exposure route. The range of annual days exposed per year was based on reasonable maximum case (the greatest number of days exposed). Household exposures are assumed to occur on a daily basis. Trespasser exposure is determined considering climate and patterns of use. Based on construction practice and depth of anticipated excavations for a proposed water treatment plant, soil exposure durations were assumed to occur year round. At a construction site, subsurface soil would be readily available to receptors, despite a normally frozen ground surface. However, potential groundwater exposure via inhalation and dermal contact would likely be a one-time event, during showering.

Two body weight groups were specified for the receptors, adults (18-70 years) at 70 kg, and children (0-18 years) at 35 kg, in accordance with RAGS.

Groundwater

The only scenario considered for groundwater in this baseline risk assessment is the residential future use scenario. Adults and children would be exposed to groundwater via ingestion, dermal contact and inhalation. Residences were assumed to be built at the Ruco property fenceline.

Groundwater ingestion exposure parameters are summarized in Tables 7-3 and 7-4. Groundwater was assumed to be the sole source of drinking water for the exposed residential populations in the future land-use scenarios. Adult residents were assumed to consume an average of two liters of water per day. It was also conservatively assumed that children consume two liters of water per day. An ingestion estimate of less than two liters for residents could underestimate risk (RAGS, 1989). Adults were assumed to be exposed for 30 years for the reasonable maximum case exposures, while children's exposure to potential carcinogens was assumed to be for six years.

Inhalation and dermal exposure to groundwater may occur to residents through showering and other household activities. A probability distribution of skin surface area exposed to groundwater was derived from age group-specific data given in the Dermal Exposure Assessment: Principles and Applications (DEAPA, January 1992). For child and adult residents the exposure values were based on the 50th percentile total body surface areas averaged for males and females. Shower durations for adults and children were assumed to be 15 minutes in the reasonable maximum case scenarios. An additional five minutes was assumed for drying off time. Adult residential exposure was assumed to occur 350 days per year for 30 years and for six years for children, exposed to potentially carcinogenic contaminants. Showering inhalation rates were assumed as 1.4 m^3/hour and 1.5 m^3/hour for adults and children, respectively. Total body skin surface area exposure was assumed for this scenario. The 50th percentile for the combined average male and female skin surface area for adults and for children (five age groups were averaged) was obtained from DEAPA. For children, a skin surface area of 12,000 cm^2 was used, while for adults 20,000 cm^2 was used.

Dermal permeability coefficients for water (Kp^w) for the compounds chosen as chemical of concern were obtained from the DEAPA. Inorganic dermal permeability coefficient were derived from Table 5-3 of DEAPA, where available; for those without the available data on the table, default value of $Kp^w = 1.0 \times 10^{-3}$ cm/hr was used. Organic dermal permeability coefficient were obtained from Table 5-7 of DEAPA. For other organics which do not have the available Kp^w, the following equation was applied to estimate them:

HKR 001 1527

$$\text{Log } Kp^{w} = 2.72 \text{ to } 71 \log K_{o/w} - 0.0061 \text{ MW}.$$

where Kp^{w} = Permeability coefficient for water;
$K_{o/w}$ = Partition coefficient between octanol and water;
MW = Molecular weight.

Surface Water

The present and future use scenario population exposed to surface water includes site workers and child trespassers, via dermal contact. The parameters and assumptions for both site workers and trespassers are the same as those used for the sediment dermal exposure scenario.

A summary of the assumptions is shown in Tables 7-5 and 7-6.

Sediment Exposure Pathways

As described previously, site workers and child trespassers are potentially exposed to the sump sediment via dermal contact and inhalation.

For site workers, the frequency of exposure was based on sump maintenance occurring twice per month. The site workers are considered to be exposed to the contaminants of concern 24 days/year for 30 years, one hour per event. For the inhalation scenario, the inhalation rate was assumed 3 m^3/hour. For the dermal contact scenario, the sediment deposition rate was assumed to be 1.0 mg/cm^2 per event, the same as soil. As only arms and hands would be exposed to the sediment, the skin surface area used was 3120 m/cm^2, derived from EPA dermal exposure guidance. The absorption factors were 3% and 0.5% for PCBs and cadmium, respectively.

Child trespassers were assumed to play on the site 55 days each year, five hours per event, over six years. The most likely exposure areas of the skin are the hands, arms, legs, head and neck. The skin surface area used was 3000 cm^2. The absorption factors for PCBs and cadmium were 3% and 0.5%, respectively. The inhalation rate for the reasonable maximum exposure was assumed to be 3 m^3/hr.

Tables 7-7 and 7-8 show the variables for the sediment exposure pathways.

Surface Soil Exposure Parameters

Site workers, child trespassers, off-site residents, and construction workers are potentially exposed to surface soil. Site workers would be exposed to surface soil via ingestion and inhalation of soil

dust and direct dermal contact with soil. The exposure frequency was assumed 250 days per year over 25 years. They are assumed to be at the site eight hours per day.

The ingestion rate was assumed to be 100 mg/day, as per RAGS. The inhalation rate of 3 m^3/hour was assumed for the reasonable maximum case. PCBs and cadmium were chosen as contaminant indicators for surface soil; therefore, dermal contact risks can be calculated based on the guidance from both EPA Region II risk assessment staff and the DEAPA. The absorption factors were assumed to be 3% for total PCBs and 0.5% for cadmium. The soil to skin adherence rate chosen was 1.0 mg/cm^2 per event for the reasonable maximum case. For direct contact, dermal exposure was expected to occur on the hands, arms, legs, neck and head (5000 cm^2).

For child trespassers, it was assumed that they would be exposed to the chemicals of concern in soil via ingestion, dermal contact and inhalation pathways. After considering climate and normal use, the frequency of exposure for reasonable maximum exposure was assumed to be 55 days per year for six years, five hours per event. Based on RAGS, the ingestion rate would be 200 mg/day and the inhalation rate, 3m^3/hour. For the dermal contact pathway, the absorption factor of PCBs was assumed to be 3%, and 0.5% for cadmium. The surface skin area exposed to soil while playing would be the hands, arms, legs, head and neck, totaling 3000 cm^2.

The off-site residents would be exposed to soil dust via inhalation and ingestion. The exposure frequency was 350 days. For children, the duration time was six years, and it was assumed to be 30 years for adults. The ingestion rate for children was assumed to be 200 mg/day and 100 mg/day for adults for the reasonable maximum exposure case. The inhalation rates were assumed to be 0.9 m^3/hr for both children and adults.

The construction workers would be exposed to surface soil during proposed wastewater treatment plant construction. They were assumed to be exposed to soils 250 days for one year. The ingestion rate was assumed to be 100 mg/day and inhalation rate was 3 m^3/hr. For the dermal contact scenario, the absorption factors were 3% for PCBs and 0.5% for cadmium. The surface skin area used was derived as 5000 cm^2 for hands, arms, legs, and head and neck.

Tables 7-9 through 7-13 detail the exposure pathway assumptions.

Subsurface Soil

Only construction workers would be exposed to subsurface soil, during the wastewater plant construction activities. Construction workers' exposure to subsurface soil via ingestion,

inhalation and dermal contact were considered. The calculation assumptions for subsurface soil are the same as those above for construction workers exposed to surface soil.

The assumptions for subsurface soil are summarized in Table 7-14.

7.8 QUANTITATIVE RISK CHARACTERIZATION

The results of the quantitative assessment of human health risks associated with exposure pathways and scenarios described previously, and the methods used to perform the quantitative analysis are presented below. The approach taken in this section is to combine the concentration data, exposure scenarios and chemical intake models, and critical toxicity values, to generate quantitative estimates of carcinogenic and noncarcinogenic health risks for the present and future use reasonable maximum case exposure scenarios. These factors are combined using methods defined by the EPA for exposure and risk assessment for Superfund and other hazardous waste sites, or methods discussed in detail in Section 7.7 . Section 7.9 provides a discussion of the risk results for the various exposure pathways and scenarios.

Quantitative Risk Assessment Methods

To quantitatively assess the potential risks to human health associated with present and future use scenarios, ingestion/inhalation chronic average daily intakes (CDIs) were estimated for each exposure pathway and dermally absorbed dose (DAD) was estimated for dermal exposure pathway using the estimated exposure point concentrations. Formulae for each matrix and exposure pathway are summarized in Figure 7-1, and are detailed in Appendix C, Tables C-1 through C-25. CDIs and DADs are expressed as the amount of a chemical an individual may be exposed to per unit body weight per day (e.g., mg/kg/day). A CDI and a DAD are averaged over a lifetime for carcinogens for adults (RAGS, 1989) and over a six year period for children. A CDI and a DAD are averaged over the annual exposure period for noncarcinogens (RAGS, 1989).

The estimated chronic daily intakes and dermally absorbed doses are then combined with health effects criteria (reference doses and slope factors) to quantitatively estimate potential human health risks. For potential carcinogens, excess lifetime cancer risks are obtained by multiplying the CDI/DAD for the contaminant under consideration by its slope factor (SF). The goal of developing a quantitative risk assessment is to establish a potential upper-bound risk in the absence of remediation at the site. USEPA has implemented remedial actions under Superfund associated with an incremental probability of developing cancer over a 70-year lifetime ranging from 10^{-4} to 10^{-6}.

Potential risks for noncarcinogens are presented as the ratio of the CDI/DAD to the reference dose (RfD) (i.e., CDI/RfD). The sum of all the ratios of chemicals under consideration for a given pathway is called the hazard index. The hazard index is useful as a reference point for gauging the potential noncarcinogenic effects of environmental exposures to complex mixtures. In general, hazard index values which are less than one are not likely to be associated with any health risks. If the hazard index is greater than one, the compounds can be segregated according to their critical effects (target organs) and separate hazard index values can be derived for each effect (USEPA 1986a). A conclusion should not be categorically drawn, however, that all hazard index values less than one are "acceptable" or that hazard index values greater than one are "unacceptable". This is perhaps a consequence of the one order of magnitude or greater uncertainty inherent in estimates of the RfD and CDI, as discussed further in Section 8.3.

In accordance with USEPA's guidelines for evaluating the potential toxicity of complex mixtures (USEPA, 1986b), it is assumed that the toxic effects of the site-related chemicals would be additive. Lifetime excess cancer risks and the CDI/RfD ratios are summed to indicate the potential risks and effects associated with mixtures of potential carcinogens and noncarcinogens, respectively. In the absence of specific information on the toxicity of the mixture to be assessed or on similar mixtures. USEPA guidelines generally recommended assuming that the effects of different components in the mixtures are additive when affecting a particular organ or system. Synergistic or antagonistic interactions may be taken into account if there is specific information on particular combinations of chemicals. In this risk assessment, it is assumed that the potential effects of the site-related chemicals are additive, and no synergistic or antagonistic effects exist.

The CDIs/DADs of indicator chemicals for potentially exposed individuals are first calculated. To determine these CDIs/DADs, the assumptions concerning chemical concentrations (exposure point concentrations), exposure conditions such as frequency and duration of exposure, are used together with media intake parameters. For each exposure scenario a reasonable maximum case is considered. The reasonable maximum case scenario is intended to place an upper-bound limit on the potential risks by combining plausible maximum exposure estimates with upper-bound health criteria. For the reasonable maximum case, the exposure point concentrations are combined with maximum values describing the extent, frequency and duration of exposure. This procedure is undertaken for both present and future-use scenarios.

7.9 RESULTS OF RISK CALCULATIONS

The following is a media and receptor-specific summary of the results of the potential carcinogenic and noncarcinogenic risk calculations for the reasonable maximum exposure scenarios for the Hooker/Ruco site. Figures 7-2 and 7-3 summarize these results.

7.9.1 Groundwater Pathways

Resident future use exposure pathways were developed using carcinogenic and noncarcinogenic chronic toxicity data for the contaminants of concern. Risk calculations and assumptions for each groundwater exposure pathway are presented in Tables C-1 to C-3.

Residents Supplied Water from the Affected Aquifer (Adults and Children - Future Use Scenarios)

Ingestion exposures yielded a potential carcinogenic risk to adults of 2.21E-03, and for children a risk of 8.84E-04. Vinyl chloride, tetrachloroethene, arsenic, and beryllium contribute the majority of this risk to adults. Those chemicals are also major factors in children's carcinogenic risk. There are potential noncarcinogenic effects based on the reasonable maximum exposure, as calculated hazard indices are greater than 1.0. The greatest HI of 1.02E+01 was calculated for children, and the adult index was 4.89E+00, as shown in Table C-1.

As summarized in Table C-2, the reasonable maximum groundwater inhalation exposures to adult residents in the future use scenario result in a potential carcinogenic risk of 5.06E-04. Vinyl chloride contributes the majority of this risk. No potential noncarcinogenic effects were evident, as calculated noncarcinogen hazard indices are 5.83E-02.

Carcinogenic inhalation risks to children residing off-site were calculated as 1.09E-04. A Hazard Index value of 1.25E-01 was derived for reasonable maximum exposure to children.

Analysis of groundwater dermal contact exposure to residents (both adults and children) resulted in a potential carcinogenic risk to adults of 1.12E-04, and to children of 1.34E-05. Arsenic, beryllium, tetrachloroethene, vinyl chloride and bis(2-ethylhexyl)phthalate are the major contributors to these risks. No noncarcinogenic effects are predicted, as the hazard indices are 2.01E-01 and 1.22E-01, respectively. See Table C-3.

7.9.2 Surface Water Pathways

On-Site Workers During Routine Maintenance (Adults Only - Present and Future Use)

The results calculated for dermal contact reasonable maximum case exposure to sump surface water were 1.05E-04 for carcinogenic risks, and 7.3E-03 for noncarcinogenic risks. The carcinogenic risks result from the presence of PCBs and arsenic.

Trespasser Recreational Use of Sumps (Children Only - Present and Future Use)

Table C-5 illustrates the calculated results of the risk analysis for those children who may trespass and make recreational use of the site. Modeling was done to determine potential inhalation exposure, and estimates made of dermal contact in order to calculate potential carcinogenic risk and noncarcinogenic effects. These calculations resulted in a potential carcinogenic risk of 9.05E-05. PCBs and beryllium contribute the majority of this risk. The hazard index is below 1.0 at 2.08E-02.

7.9.3 Sediment Pathways

On-Site Workers During Routine Maintenance (Adults Only - Present and Future Use Scenario)

The site worker sediment exposure pathway scenarios were developed to assess the potential risks from sediment via ingestion, inhalation and dermal contact. The calculated potential ingestion and inhalation risks are shown on Tables C-6 and C-7, respectively. Ingestion carcinogenic risk was 2.78E-06, with noncarcinogenic index of 6.43E-03. The total inhalation risk was 1.23E-09 and the hazard index was 1.39E-11.

Table C-8 illustrates the calculated risks results via dermal contact with sediment. The carcinogenic risk is 2.42E-06. The noncarcinogenic risk result is 2.64E-04.

Trespasser Recreational Use of Sumps (Children Only - Present and Future Use Scenario).

Potential child trespasser risks from ingestion, inhalation, and dermal contact were assessed. The calculated results are presented in Tables C-9, C-10 and C-11, respectively. Ingestion resulted in a potential carcinogenic risk of 6.11E-06 and noncarcinogenic index of 3.34E-02. The carcinogenic dermal contact risk was 2.56E-06. The carcinogenic inhalation risk was calculated as 8.48E-11, and the hazard index for inhalation was 4.16E-12.

7.9.4 Surface Soil Pathways

On-Site Workers

Table C-12 illustrates the potential carcinogenic risks from soil ingestion to workers. The calculated carcinogenic risk for ingestion was 4.93E-05. The majority of this risk is due to the presence of carcinogenic PAHs and PCBs in the surface soil. The calculated noncarcinogenic hazard index to workers through ingestion is 5.83E-03.

The potential carcinogenic risk to site workers via inhalation was 4.23E-09. The noncarcinogenic hazard index was 1.30E-09. See Table C-13.

The potential carcinogenic risk to site workers via dermal contact was calculated as 4.52E-05, which was solely from total PCBs. The noncarcinogenic hazard index was 5.46E-07. See Table C-14.

Construction Workers for Proposed Wastewater Treatment Plant (Adults Only - Future Use Scenario)

Table C-15 to Table C-17 in Appendix C illustrate the potential carcinogenic risks and subchronic noncarcinogenic effects to construction workers. The carcinogenic risk via surface soil ingestion by construction workers was 2.11E-06. The ingestion noncarcinogenic hazard index was 2.71E-03. Potential surface soil inhalation carcinogenic risk was derived as 1.69E-10. The inhalation hazard index was 1.91E-09. Carcinogenic risk via dermal contact with surface soil by construction workers was 1.81E-06.

Site Trespassers (Children Only - Present and Future Use Scenario)

Child trespasser present and future use exposure pathways were developed using carcinogenic and noncarcinogenic toxicity data for the contaminants of concern. The potential carcinogenic ingestion risk to child trespassers was calculated as 1.12E-05 (Table C-18). The majority of the risk came from carcinogenic PAHs and total PCBs. No potential noncarcinogenic ingestion effects were evident, as calculated hazard indices were 2.38E-03.

The potential carcinogenic inhalation risk to child trespassers was calculated as 2.79E-10. The noncarcinogenic hazard index was 5.25E-10. (Table C-19). The carcinogenic dermal contact risk to child trespassers was evaluated based only on total PCBs, in accordance with EPA guidance. The calculated result (Table C-20) was 1.40E-06.

Off-site and Fenceline Residents (Adults and Children - Present and Future Use Scenario).

Residential inhalation scenarios for both adults and children were developed to assess the potential risk from soil dust. The calculated result for adults was 6.40E-09, and for children it was 2.56E-09. The noncarcinogenic potential risks were calculated as 1.64E-09 for adults and 3.28E-09 for children, respectively. (See Tables C-21 and C-22).

7.9.5 Subsurface Soil Pathways

Construction Workers for Proposed On-Site Wastewater Treatment Plant (Adults Only - Future Use Scenario)

Construction worker future use scenarios were used to calculate subsurface soil exposure carcinogenic risks and the potential for noncarcinogenic effects. Reasonable maximum exposures to workers via incidental ingestion yielded carcinogenic risks of 3.19E-06. Inhalation and dermal contact carcinogenic risks were 5.57E-10 and 4.98E-06, respectively. Carcinogenic PAHs, PCBs and beryllium contributed most of this risk for the ingestion pathways; PAHs for inhalation; and PCBs for dermal contact.

Noncarcinogenic effect hazard indices for all exposure pathways were below 1.0. The calculated HI for inhalation was 7.53E-10, and for ingestion it was 1.35E-02. (See Tables C-23 through C-25).

7.10 COMBINING RISK LEVELS AND HAZARD INDEX VALUES ACROSS PATHWAYS

Tables 7-15 through 7-19 present reasonable maximum exposure pathway combinations for present and future use scenarios at the Hooker/Ruco site. Adult and child residents off-site and at the fenceline, site workers, construction workers and child trespassers are considered to be the populations with potential multiple pathways of exposure.

The present and future off-site resident exposures were assessed for the soil ingestion and inhalation scenarios. The future fenceline use residential exposure scenarios were evaluated for all pathways, including groundwater via the ingestion, inhalation, and dermal contact routes, and inhalation and ingestion of airborne soil dust. For carcinogens, the combined reasonable maximum exposure to all adult (off-site and fenceline) residents yielded a potential carcinogenic risk of 2.83E-03. Potential noncarcinogenic health effects were exhibited, with a hazard index of 5.15E+00 (Table 7-15). Similar results (Table 7-16) were obtained for child off-site resident exposures. Carcinogenic risk for combined exposures was 1.01E-03, and the noncarcinogenic Hazard Index was 1.04E+01.

It should be noted that future fenceline resident adult potential carcinogenic risks were calculated at 2.21E-03, 5.06E-04, and 1.12E-04 for the groundwater ingestion, inhalation, and dermal contact pathways, respectively. The child risks are similar. These future, not current, scenarios constitute the majority of risks to residents.

Site workers are potentially exposed to surface soil via ingestion, inhalation and dermal contact; surface water via dermal contact; and sediment via ingestion, inhalation and dermal contact exposure pathways. The combined carcinogenic risk is 2.05E-04. The noncarcinogenic hazard index was 1.98E-02, which is less than 1.0. See Table 7-18.

The future use scenario for wastewater plant construction workers was evaluated for surface and subsurface soil via the incidental ingestion, inhalation, and dermal contact pathways (Table 7-19). The potential combined reasonable maximum exposure carcinogenic risk is 1.21E-05. Noncarcinogens pose no evident potential health effects, at 1.62E-02.

Present and future use exposure for child trespassers on-site is through the inhalation, ingestion and dermal contact pathway for soils and sediment, and inhalation and dermal contact for sump surface water. The attendant calculated risk is 1.12E-04. The noncarcinogenic health effect Hazard Index of 5.66E-02 is less than 1.0. See Table 7-17.

7.11 QUALITATIVE DISCUSSION OF RISKS NOT QUANTITATIVELY EVALUATED IN THE RISK ASSESSMENT

The quantitative risk assessment of site matrices does not include several compounds detected in the RI sampling for several reasons. Some compounds did not meet the frequency of detection criterion, or were not potential carcinogens detected above 1 ug/L or 1 ug/kg, while others lacked sufficient toxicological data. Several compounds were eliminated because they did not contribute at least 0.1% of the total risk. Based on the low concentrations and frequency of occurrence, the compounds not quantitatively evaluated probably do not pose any greater risk than those quantified in this report.

The organic compounds chloroethane, 2-hexanone, 4-chloro-3-methylphenol, 2-chlorophenol, 1,2-dichlorobenzene, 1,3-dichlorobenzene, 2-methylnaphthalene, dibenzofuran, 1,2- and 1,3-dichlorobenzene, 4,4'-methylene bis(2-chloraniline), 2-methylnaphthalene, 2-methylphenol, 4-nitroaniline, 2,2,4-trichlorobenzene, dibenzo(a,h)anthracene, acenaphthylene, benzo(g,h,i)pyrene, phenanthrene, alpha BHC, delta-BHC, endosulfan sulfate, endrin ketone, gamma-BHC, and inorganics aluminum, calcium, cobalt, copper, iron, lead , magnesium, potassium, and sodium could not be quantitatively evaluated due to a lack of EPA toxicity factors. The known toxicological effects of these compounds are presented in Appendix B.

The quantitative risk assessment excludes certain potential pathways of exposure, for a variety of reasons. Off-site groundwater use will be addressed in a separate operable unit, and potential risks associated with its use are excluded from this report. Risks from groundwater use at the fenceline indicate potential health effects from this pathway. Air contaminants are not addressed,

likely mask any air quality concerns solely from past disposal practices. Air and soil gas monitoring also showed minimal levels of contamination on the days sampling took place.

7.12 POTENTIAL PUBLIC WELFARE IMPACTS

Contamination has been detected in on-site and off-site groundwater, site sump surface water and sediment, and surface and subsurface soil.

The groundwater contamination may preclude its future use as a drinking water or industrial supply, or require treatment, with its associated costs. Some wells in the area have already been taken out of service as a result of industrial contamination.

This, and contamination of site soils may limit redevelopment and the value of the site and surrounding properties for residential, or other commercial or industrial use.

While not included in this assessment, it should be noted that air emissions from the site's active operations are a source of complaints from local residents. As indicated above, 45 air emissions are permitted at this site, and fugitive emissions are not fully under control, according to Ruco staff. This "nuisance factor", and any potential health risk from these emissions may be the most significant public welfare impact.

HKR 001 1537

FIGURE 7-1

SUMMARY OF RISK CALCULATION FORMULAE

HOOKER/RUCO SITE

CARCINOGENS - REASONABLE MAXIMUM SOIL INGESTION EXPOSURE

Chronic Daily Intake = (mg/kg-day) = Soil Concentration X Soil Intake X Bioavail. Factor X 1 / Body Wt. X Days Exposed/Year / Days/Year X Years Exposed / Years Lifetime X 1kg / 10^6 mg

NONCARCINOGENS - REASONABLE MAXIMUM SOIL INGESTION EXPOSURE

Chronic Daily Intake = (mg/kg-day) = Soil Concentration X Soil Intake X Bioavail. Factor X 1 / Body Wt. X Days Exposed/Year / Days/Year X 1kg / 10^6 mg

CARCINOGENS - REASONABLE MAXIMUM SOIL DERMAL CONTACT EXPOSURE

Chronic Daily Intake = (mg/kg-day) = Soil Concentration X Absorption Factor X Skin Surface Area X Adherence Factor X 1 / Body Wt X Events/Year / Days/Year X Years Exposed / Years Lifetime X 1 kg / 10^6 mg

NONCARCINOGENS - REASONABLE MAXIMUM SOIL DERMAL CONTACT EXPOSURE

Chronic Daily Intake = (mg/kg-day) = Soil Concentration X Absorption Factor X Skin Surface Area X Adherence Factor X 1 / Body Wt X Events/Year / Days/Year X 1 kg / 10^6 mg

CARCINOGENS - REASONABLE MAXIMUM SOIL INHALATION EXPOSURE

Chronic Daily Intake = (mg/kg-day) = Soil Concentration X Susp Soil* Concentration X Length of Exposure X Inhalation Rate X Bioavail. Factor X 1 / Body Wt X Days Exposed/Year / Days/Year X Years Exposed / Years Lifetime X 1 kg / 10^6 mg

NONCARCINOGENS - REASONABLE MAXIMUM SOIL INHALATION EXPOSURE

Chronic Daily Intake = (mg/kg-day) = Soil Concentration X Susp Soil* Concentration X Length of Exposure X Inhalation Rate X Bioavail. Factor X 1 / Body Wt X Days Exposed/Year / Days/Year X 1 kg / 10^6 mg

Susp Soil* = Suspended Soil

FIGURE 7-1

SUMMARY OF RISK CALCULATION FORMULAE

HOOKER/RUCO SITE

CARCINOGENS - REASONABLE MAXIMUM SURFACE WATER/GROUNDWATER INGESTION EXPOSURE:

Chronic Daily Intake = (mg/kg-day) Water Concentration X Intake X Bioavail. Factor X 1 / Body Wt. X Years Exposed / Years Lifetime X Days Exposed/Year / Days/Year

NONCARCINOGENS - REASONABLE MAXIMUM SURFACE WATER/GROUND WATER INGESTION EXPOSURE:

Chronic Daily Intake = (mg/kg-day) Water Concentration X Intake X Bioavail. Factor X 1 / Body Wt. X Days Exposed/Year / Days/Year

CARCINOGENS - REASONABLE MAXIMUM SURFACE WATER/GROUND WATER DERMAL CONTACT EXPOSURE:

Dermal Absorbed Dose = (mg/kg-day) Absorbed dose / Event X Events / Day X Skin Surface Area X 1 / Body Wt. X Years Exposed / Years Lifetime X Days Exposed/Year / Days/Year

NONCARCINOGENS - REASONABLE MAXIMUM SURFACE WATER/GROUND WATER DERMAL CONTACT EXPOSURE:

Dermal Absorbed Dose = (mg/kg-day) Absorbed dose / Event X Events / Day X Skin Surface Area X 1 / Body Wt. X Days Exposed/Year / Days/Year

CARCINOGENS - REASONABLE MAXIMUM SURFACE WATER/GROUND WATER INHALATION EXPOSURE WHILE SHOWERING :

Chronic Daily Intake = (mg/kg-day) Contaminant Intake X 1 / Body Wt. X Bioavail. Factor X Days Exposed / Days/Year X Years Exposed / Years Lifetime

NONCARCINOGENS - REASONABLE MAXIMUM SURFACE WATER/GROUNDWATER INHALATION EXPOSURE WHILE SHOWERING:

Chronic Daily Intake = (mg/kg-day) Contaminant Intake X 1 / Body Wt. X Bioavail. Factor X Days Exposed / Days/Year

FIGURE 7-1

SUMMARY OF RISK CALCULATION FORMULAE

HOOKER/RUCO SITE

CARCINOGENS - REASONABLE MAXIMUM SEDIMENT INGESTION EXPOSURE

Chronic Daily Intake = (mg/kg-day) Sediment Concentration X Sediment Intake X Bioavail. Factor X 1 / Body Wt. X Days Exposed/Year / Days/Year X Years Exposed / Years Lifetime X 1kg / 10^6 mg

NONCARCINOGENS - REASONABLE MAXIMUM SEDIMENT INGESTION EXPOSURE

Chronic Daily Intake = (mg/kg-day) Sediment Concentration X Sediment Intake X Bioavail. Factor X 1 / Body Wt. X Days Exposed/Year / Days/Year X 1kg / 10^6 mg

CARCINOGENS - REASONABLE MAXIMUM SEDIMENT DERMAL CONTACT EXPOSURE

Chronic Daily Intake = (mg/kg-day) Sediment Concentration X Absorption Factor X Skin Surface Area X Adherence Factor X 1 / Body Wt X Events/Year / Days/Year X Years Exposed / Years Lifetime X 1 kg / 10^6 mg

NONCARCINOGENS - REASONABLE MAXIMUM SEDIMENT DERMAL CONTACT EXPOSURE

Chronic Daily Intake = (mg/kg-day) Sediment Concentration X Absorption Factor X Skin Surface Area X Adherence Factor X 1 / Body Wt X Events/Year / Days/Year X 1 kg / 10^6 mg

CARCINOGENS - REASONABLE MAXIMUM SEDIMENT INHALATION EXPOSURE

Chronic Daily Intake = (mg/kg-day) Sediment Concentration X Sediment Concentration X Length of Exp X Inhalation Rate X Bioavail. Factor X 1 / Body Wt X Days Exposed/Year / Days/Year X Years Exposed / Years Lifetime X 1 kg / 10^6 mg

NONCARCINOGENS - REASONABLE MAXIMUM SEDIMENT INHALATION EXPOSURE

Chronic Daily Intake = (mg/kg-day) Sediment Concentration X Sediment Concentration X Length of Exp X Inhalation Rate X Bioavail. Factor X 1 / Body Wt X Days Exposed/Year / Days/Year X 1 kg / 10^6 mg

FIGURE 7-2
SUMMARY OF CARCINOGENIC TOTAL RISK RESULTS BY EXPOSURE PATHWAY

Matrix	Receptor	Exposure Pathway	Carcinogenic Risk	Major Contributor(s) to Risk
Surface Water	Child Trespasser	Dermal Contact	9.05E-05	Beryllium, PCBs
Surface Water	Site Worker	Dermal Contact	1.05E-04	Beryllium, PCBs
Ground Water	Child Resident	Inhalation	1.09E-04	Vinyl Chloride
Ground Water	Adult Resident	Inhalation	5.06E-04	Vinyl Chloride
Ground Water	Child Resident	Ingestion	8.84E-04	Vinyl Chloride, Arsenic, Beryllium, Tetrachloroethene
Ground Water	Adult Resident	Ingestion	2.21E-03	Vinyl Chloride, Arsenic, Beryllium, Tetrachloroethene
Ground Water	Child Resident	Dermal Contact	1.34E-05	Vinyl Chloride, Arsenic, Tetrachloroethene
Ground Water	Adult Resident	Dermal Contact	1.12E-04	Vinyl Chloride, Arsenic, Tetrachloroethene
Sediment	Site Worker	Ingestion	2.78E-06	PCBs
Sediment	Site Worker	Inhalation	1.23E-09	Cadmium
Sediment	Site Worker	Dermal Contact	2.42E-06	PCBs
Sediment	Child Trespasser	Ingestion	6.11E-06	PCBs
Sediment	Child Trespasser	Inhalation	8.48E-11	Cadmium
Sediment	Child Trespasser	Dermal Contact	2.56E-06	PCBs

HKR 001 1541

FIGURE 7-2
SUMMARY OF CARCINOGENIC TOTAL RISK RESULTS BY EXPOSURE PATHWAY

Matrix	Receptor	Exposure Pathway	Carcinogenic Risk	Major Contributor(s) to Risk
Surface Soil	Adult Resident	Inhalation	6.40E-09	PAHs, Arsenic, Hexachlorobenzene, Heptachlor Epoxide
Surface Soil	Child Resident	Inhalation	2.56E-09	PAHs, Arsenic, Hexachlorobenzene, Heptachlor Epoxide
Surface Soil	Construction Worker	Ingestion	2.11E-06	PAHs, Hexachlorobenzene, PCBs
Surface Soil	Construction Worker	Inhalation	1.69E-10	PAHs, Hexachlorobenzene
Surface Soil	Construction Worker	Dermal Contact	1.81E-06	PCBs
Surface Soil	Site Worker	Ingestion	4.93E-05	PCBs, PAHs
Surface Soil	Site Worker	Inhalation	4.23E-09	Hexachlorobenzene, PAHs
Surface Soil	Site Worker	Dermal Contact	4.52E-05	PCBs
Surface Soil	Child Trespasser	Ingestion	1.12E-05	PCBs, PAHs
Surface Soil	Child Trespasser	Inhalation	2.79E-10	PAHs
Surface Soil	Child Trespasser	Dermal Contact	1.40E-06	PCBs
Subsurface Soil	Construction Worker	Ingestion	3.19E-06	PCBs, PAHs, Arsenic, Bis(2-ethylhxyl)phthalate
Subsurface Soil	Construction Worker	Inhalation	5.57E-10	PAHs
Subsurface Soil	Construction Worker	Dermal Contact	4.98E-06	PCBs, Arsenic

HKR 001 1542

FIGURE 7-3
SUMMARY OF NONCARCINOGENIC HAZARD INDEX RESULTS BY EXPOSURE PATHWAY

Matrix	Receptor	Exposure Pathway	Nonarcinogenic Hazard Index	Major Contributor(s) to Risk
Surface Water	Child Trespasser	Dermal Contact	2.08E-02	Antimony, Arsenic, Barium, Maganese, Vanadium,
Surface Water	Site Worker	Dermal Contact	1.79E-02	Bis (2-ethylhexyl) phthalate
Ground Water	Child Resident	Inhalation	1.25E-01	Carbon Disulfide, 4-methyl-2-Pentanone
Ground Water	Adult Resident	Inhalation	5.82E-02	
Ground Water	Child Resident	Ingestion	1.02E+01	Antimony, Arsenic
Ground Water	Adult Resident	Ingestion	4.89E+00	
Ground Water	Child Resident	Dermal Contact	1.22E-01	Antimony, Arsenic, Tetrachloroethene,
Ground Water	Adult Resident	Dermal Contact	2.00E-01	Bis (2-ethyl hexyl) phthalate
Sediment	Site Worker	Inhalation	1.39E-11	Ethylbenzene
Sediment	Site Worker	Ingestion	6.43E-03	Antimony, Cadmium
Sediment	Site Worker	Dermal Contact	2.64E-04	Cadmium
Sediment	Child Trespasser	Inhalation	4.16E-12	Ethylbenzene
Sediment	Child Trespasser	Ingestion	3.34E-02	Antimony, Vanadium

HKR 001 1543

FIGURE 7-3
SUMMARY OF NONCARCINOGENIC HAZARD INDEX RESULTS BY EXPOSURE PATHWAY

Matrix	Receptor	Exposure Pathway	Nonarcinogenic Hazard Index	Major Contributor(s) to Risk
Subsurface Soil	Construction Worker	Inhalation	7.53E-10	Toluene
Subsurface Soil	Construction Worker	Ingestion	1.35E-02	Arsenic, Bis (2-ethylhexyl) phthalate, Vanadium
Surface Soil	Adult Resident	Inhalation	1.64E-09	Mercury, Toluene
Surface Soil	Child Resident	Inhalation	3.28E-09	Mercury, Toluene
Surface Soil	Construction Worker	Inhalation	1.91E-09	Toluene
Surface Soil	Construction Worker	Ingestion	2.71E-03	Bis (2-ethylhxyl) phthalate, 4,4-DDT, Hexachlorobenzene
Surface Soil	Site Worker	Inhalation	1.30E-09	Mercury, Toluene
Surface Soil	Site Worker	Ingestion	5.83E-03	Bis (2-ethylhxyl) phthalate, Heptachlor Epoxide
Surface Soil	Site Worker	Dermal Contact	5.46E-07	Cadmium
Surface Soil	Child Trespasser	Inhalation	5.25E-10	Mercury, Toluene
Surface Soil	Child Trespasser	Ingestion	2.38E-03	Bis (2-ethylhxyl) phthalate, 4,4-DDT, Hexachlorobenzene

TABLE 7-1

HOOKER RUCO SITE

CHEMICAL - SPECIFIC ARARS

CHEMICAL	SDWA(1) MCLs mg/l	SDWA(1) MCLGs mg/l	N Y (2) MCLs mg/l	N.Y. GROUND WATER(3) QUALITY CRITERIA ug/l	N Y. SURFACE WATER(3) QUALITY CRITERIA ug/l	N Y. AQUATIC SEDIMENT(4) CLEANUP CRITERIA ug/kg
Volatiles:						
Acetone	-	-	0.005	-	-	-
Benzene	0.005	-	0.05	-	-	-
2-Butanone	-	-	0.005	-	-	-
Chlorobenzene	-	-	0.05	-	5	-
Dibromochloromethane	-	-	0.005	-	-	-
1,2-Dichloroethane	0.005	-	0.005	-	-	-
1,1-Dichloroethene	0.007	-	0.005	-	-	-
trans-1,2-Dichloroethene	0.1	0.1	0.05	-	-	2
trans-1,3-Dichloroethene	-	-	0.005	-	-	-
Ethylbenzene	0.7	0.7	0.005	-	-	-
Methylene Chloride	0	0	0.05	-	-	-
4-Methyl-2-Pentanone	-	-	0.005	-	-	-
Tetrachloroethene	0	0	0.005	-	-	0.8
Toluene	-	-	0.005	-	-	-
Total Xylenes	10	10	0.005	-	-	-
Trichloroethene	-	-	0.005	-	-	2
Vinyl Chloride	-	-	0.002	-	-	-
Semi-Volatiles:	-	-	-	-	-	-
Benzoic Acid	-	-	0.05	-	-	-
Bis(2-ethylhexyl)phthalate	-	-	0.05	0.6	0.6	-
Butyl benzyl phthalate	-	-	0.05	-	-	-
1,4-Dichlorobenzene	0.0075	-	0.05	-	5	-
Diethylphthalate	-	-	0.05	-	-	-
2,4-Dimethylphenol	-	-	0.05	-	-	-
Dimethylphthalate	-	-	0.05	-	-	-
Di-n-butyl phthalate	-	-	0.05	-	-	-
Hexachloroethane	-	-	0.05	-	-	-
4-Methylphenol	-	-	0.05	-	-	-
3-Nitroaniline	-	-	0.05	-	-	-
Phenol	-	-	0.05	-	5	-
Carcinogenic PAHs	-	0	0.05	-	-	-
Anthracene	-	-	0.05	-	-	-

NOTE: (1) FEDERAL SAFE DRINKING WATER ACT, MAXIMUM CONTAMINANT LEVELS, 40 CFR 141.
(2) NEW YORK SAFE DRINKING WATER ACT, MAXIMUM CONTAMINANT LEVELS, 10NYCRR PART 5.
(3) NEW YORK SURFACE WATER AND GROUND WATER QUALITY CRITERIA, 6 NYCRR 703.
(4) NEW YORK STATE CLEANUP CRITERIA FOR AQUATIC SEDIMENTS, TOGS

TABLE 7-1

HOOKER RUCO SITE
CHEMICAL - SPECIFIC ARARS

CHEMICAL	SDWA(1) MCLs mg/l	SDWA(1) MCLGs mg/l	N.Y.(2) MCLs mg/l	N.Y. GROUND WATER(3) QUALITY CRITERIA ug/l	N.Y. SURFACE WATER(3) QUALITY CRITERIA ug/l	N.Y. AQUATIC SEDIMENT(4) CLEANUP CRITERIA ug/kg
PCBs And Pesticide:	-	-	-	-	-	-
Aldrin	-	-	-	-	-	-
Chlordane	-	-	-	-	-	-
4,4'-DDE	-	-	-	-	-	-
Dieldrin	-	-	-	-	-	-
Endosulfan	-	-	-	-	0.001	-
Endrin	0.0002	0.002	-	-	-	-
Heptachlor	0.0004	0	-	-	0.001	-
Heptachlor Epoxide	0.0002	0	-	-	0.001	-
Total PCBs	0.0005	0	-	-	0.001	0.008
Inorganics:	-	-	-	-	-	-
Aluminum					100	-
Arsenic	-	0.003	0.05	-	360	-
Barium			1			-
Beryllium			-			-
Cadmium	0.005	0.005	0.01	-	exp(1.126[ln ppm hardness])-3.828	-
Copper			1		exp(0.9422[lnppm hardness])-1.464	-
Chromium	0.1	0.1	0.05	-	exp(0.819[lnppm hardness])+3.688	-
Lead			0.05		exp(1.266[lnppm hardness])-1.416	-
Manganese	0.05*	-	1.7	-	-	-
Mercury	0.002	0.002	0.002	-	0.2	-
Nickel	-	0.1	-	-	exp(0.76[lnppm hardness])+4.02	-
Selenium			0.002			-
Silver	0.05	-	0.05	-	exp(1.72[lnppm hardness])-6.52	-
Vanadium			-		190	-
Zinc			5		exp(0.83[lnppm hardness])+1.95	-

NOTE:
(1) FEDERAL SAFE DRINKING WATER ACT, MAXIMUM CONTAMINANT LEVELS, 40 CFR 141.
(2) NEW YORK SAFE DRINKING WATER ACT, MAXIMUM CONTAMINANT LEVELS, 10NYCRR PART 5.
(3) NEW YORK SURFACE WATER AND GROUND WATER QUALITY CRITERIA, 6 NYCRR 703.
*. EXP(0.76(LN(PPM HARDNESS))+1.06
**. APPLIES TO IONIC SILVER.
(4) NEW YORK STATE CLEANUP CRITERIA FOR AQUATIC SEDIMENTS, TOGS

TABLE 7-2
HOOKER/RUCO SITE
EXPOSURE PATHWAY - PRESENT AND FUTURE USE SCENARIOS

TIME FRAME AND MATRIX	RECEPTORS		EXPOSURE ROUTE
Ground Water			
Future Use	Residents	Children	Ingestion/Inhalation/Dermal Contact
	(at fenceline)	Adults	Ingestion/Inhalation/Dermal Contact
Surface Water			
Present And	Site Workers	Adults	Dermal Contact
Future Use	Trespassers	Children	Dermal Contact
Sediment			
Present And	Site Workers	Adults	Ingestion/Inhalation/Dermal Contact
Future Use	Trespassers	Children	Ingestion/Inhalation/Dermal Contact
Surface Soil			
Present And	Site Workers	Adults	Ingestion/Inhalation/Dermal Contact
Future Use	Trespassers	Children	Ingestion/Inhalation/Dermal Contact
	Off-site Residents	Children	Inhalation
		Adults	Inhalation
Future Use	Construction Workers	Adults	Ingestion/Inhalation/Dermal Contact
Subsurface Soil			
Future Use	Construction Workers	Adults	Ingestion/Inhalation/Dermal Contact
Air			
Present And	Site Workers	Adults	Inhalation
Future Use	Trespasser	Children	Inhalation
	Off-site Residents	Children	Inhalation
		Adults	Inhalation
Future Use	Construction Workers	Adults	Inhalation

TABLE 7-3
PARAMETERS AND ASSUMPTIONS TO CALCULATE
GROUND WATER EXPOSURE PATHWAYS
FUTURE USE SCENARIO
HOOKER/RUCO SITE

Receptor: Residents--Adults

Exposure Route	Ingestion	Dermal Contact	Inhalation
Exposure Frequency *days/year*	350	350	350
Exposure Duration *years/life time*	30	30	30
Body Weight *kg*	70	70	70
Bioavailability Factor	1	-	1
Ingestion Rate *L/day*	2	-	-
Skin Surface Area *cm2*	-	20000	-
Exposure Time *hours/day*	-	0.25	0.33
Inhalation Rate *M3/Hr*	-	-	1.4

Parameters for Shower

Shower Frequency=1/day
Shower Room Vol.(m^3)=12.0
Droplet Diam.(mm)=1.0
Shower Water Flow Rate (l/min.)=10.0
Bathroom Air Exchange Rate (exch/hr)=1.0

Shower Water Temperature (C)=45.0
Droplet Drop Time (sec.)=2.000
Shower Duration (min.) =15.0
Time in Room After Shower (min.) =5.0
Viscosity of Shower Water (cp) = 0.601

TABLE 7-4
PARAMETERS AND ASSUMPTIONS TO CALCULATE
GROUND WATER EXPOSURE PATHWAYS
FUTURE USE SCENARIO
HOOKER/RUCO SITE

Receptor: Residents–Children

Exposure Route	Ingestion	Dermal Contact	Inhalation
Exposure Frequency *days/year*	350	350	350
Exposure Duration *years/life time*	6	6	6
Body Weight *kg*	35	35	35
Bioavailability Factor	1	-	1
Ingestion Rate *L/day*	2	-	-
Skin Surface Area *cm2*	-	12000	-
Exposure Time *hours/day*	-	0.25	0.33
Inhalation Rate *M3/Hr*	-	-	1.5

Parameters for Shower

Shower Frequency=1/day
Shower Room Vol.(m^3)=12.0
Droplet Diam.(mm)=1.0
Shower Water Flow Rate (l/min.)=10.0
Bathroom Air Exchange Rate (exch/hr)=1.0

Shower Water Temperature (C)=45.0
Droplet Drop Time (sec.)=2.000
Shower Duration (min.) =15.0
Time in Room After Shower (min.) =5.0
Viscosity of Shower Water (cp) = 0.601

TABLE 7-5
PARAMETERS AND ASSUMPTIONS TO CALCULATE
SURFACE WATER EXPOSURE PATHWAYS
PRESENT AND FUTURE USE SCENARIO
HOOKER/RUCO SITE

Receptor: Site Workers

Exposure Route	**Dermal Contact**
Exposure Frequency *days/year*	24
Exposure Duration *years/lifetime*	25
Exposure Time *hours/event*	8
Body Weight *kg*	70
Bioavailability Factor	1
Skin Surface Area *cm2*	3120

TABLE 7-6
PARAMETERS AND ASSUMPTIONS TO CALCULATE
SURFACE WATER EXPOSURE PATHWAYS
FUTURE USE SCENARIO
HOOKER/RUCO SITE

Trespassers- Children

Exposure Route	Dermal Contact
Exposure Frequency *days/year*	55
Exposure Duration *years/lifetime*	6
Exposure Time *hours/event*	5
Body Weight *kg*	35
Bioavailability Factor	1
Skin Surface Area *cm2*	3000

TABLE 7-7
PARAMETERS AND ASSUMPTIONS TO CALCULATE
SEDIMENT EXPOSURE PATHWAYS
PRESENT AND FUTURE USE SCENARIO
HOOKER/RUCO SITE

Receptor: Site Workers

Exposure Route	Ingestion	Dermal Contact	Inhalation
Exposure Frequency *days/year*	24	24	24
Exposure Duration *years/life time*	25	25	25
Body Weight *kg*	70	70	70
Bioavailability Factor	1	-	1
Skin Surface Area *cm2*	-	3120	-
Sediment Deposition Rate *mg/cm2*	-	1	-
Exposure Time *hours/day*	8	8	8
Inhalation Rate *m3/hour*	-	-	3
Absorption Factors %	-	0.5-PCBs 3-Cadmium	-
Ingestion Rate *mg/day*	100	-	-

TABLE 7-8
PARAMETERS AND ASSUMPTIONS TO CALCULATE
SEDIMENT EXPOSURE PATHWAYS
PRESENT AND FUTURE USE SCENARIO
HOOKER/RUCO SITE

Receptor: Trespassers-Children

Exposure Route	Ingestion	Dermal Contact	Inhalation
Exposure Frequency *days/year*	55	55	55
Exposure Duration *years/life time*	6	6	6
Body Weight *kg*	35	35	35
Bioavailability Factor	1	-	1
Skin Surface Area *cm2*	-	3000	-
Sediment Deposition Rate *mg/cm2*	-	1	-
Exposure Time *hours/day*	5	5	5
Inhalation Rate *m3/hour*	-	-	3
Absorption Factors %	-	0.5-PCBs 3-Cadmium	-
Ingestion Rate *mg/day*	100	-	-

TABLE 7-9
PARAMETERS AND ASSUMPTIONS TO CALCULATE
SURFACE SOIL EXPOSURE PATHWAYS
PRESENT AND FUTURE USE SCENARIO
HOOKER/RUCO SITE

Receptor: Site Workers

Exposure Route	Ingestion	Dermal Contact	Inhalation
Exposure Frequency *days/year*	250	250	250
Exposure Duration *years/life time*	25	25	25
Body Weight *kg*	70	70	70
Bioavailability Factor	1	0.5	1
Ingestion Rate *mg/day*	100	-	-
Skin Surface Area *cm2*	-	5000	-
Soil Deposition Rate *mg/cm2*	-	1	-
Exposure Time *hours/day*	8	8	8
Inhalation Rate *m3/hour*	-	-	3
Absorption Factors %	-	0.5-PCBs 3-Cadmium	-

TABLE 7-10
PARAMETERS AND ASSUMPTIONS TO CALCULATE
SURFACE SOIL EXPOSURE PATHWAYS
PRESENT AND FUTURE USE SCENARIO
HOOKER/RUCO SITE

Receptor: Trespassers - Children

Exposure Route	Ingestion	Dermal Contact	Inhalation
Exposure Frequency *days/year*	55	55	55
Exposure Duration *years/life time*	6	6	6
Body Weight *kg*	35	35	35
Bioavailability Factor	1	-	1
Ingestion Rate *mg/day*	200	-	-
Skin Surface Area *cm2*	-	3000	-
Soil Deposition Rate *mg/cm2*	-	1	-
Exposure Time *hours/day*	5	5	5
Inhalation Rate *m3/hour*	-	-	3
Absorption Factors %	-	0.5-PCBs 3-Cadmium	-

TABLE 7-11
PARAMETERS AND ASSUMPTIONS TO CALCULATE
SURFACE SOIL EXPOSURE PATHWAYS
FUTURE USE SCENARIO
HOOKER/RUCO SITE

Receptor: Construction Workers

Exposure Route	Ingestion	Dermal Contact	Inhalation
Exposure Frequency *days/year*	250	250	250
Exposure Duration *years/life time*	1	1	1
Body Weight *kg*	70	70	70
Bioavailability Factor	1	0.5	1
Ingestion Rate *mg/day*	100	-	-
Skin Surface Area *cm2*	-	5000	-
Soil Deposition Rate *mg/cm2*	-	1	-
Exposure Time *hours/day*	8	8	8
Inhalation Rate *m3/hr*	-	-	3
Absorption Factors %	-	0.5-PCBs 3-Cadmium	-

HKR 001 1556

TABLE 7-12
PARAMETERS AND ASSUMPTIONS TO CALCULATE
SURFACE SOIL EXPOSURE PATHWAYS
PRESENT AND FUTURE USE SCENARIO
HOOKER/RUCO SITE

Receptor: Off-Site Residents - Adults

Exposure Route	**Inhalation**
Exposure Frequency *days/year*	350
Exposure Duration *years/life time*	30
Body Weight *kg*	70
Bioavailability Factor	1
Inhalation Rate *m3/hour*	0.90
Exposure Time *hours/day*	24

TABLE 7-13
PARAMETERS AND ASSUMPTIONS TO CALCULATE
SURFACE SOIL EXPOSURE PATHWAYS
PRESENT AND FUTURE USE SCENARIO
HOOKER/RUCO SITE

Receptor: Off-Site Residents - Children

Exposure Route	Inhalation
Exposure Frequency *days/year*	350
Exposure Duration *years/life time*	6
Body Weight *kg*	35
Bioavailability Factor	1
Inhalation Rate *m3/hour*	0.90
Exposure Time *hours/day*	24

TABLE 7-14
PARAMETERS AND ASSUMPTIONS TO CALCULATE
SUBSURFACE SOIL EXPOSURE PATHWAYS
FUTURE USE SCENARIO
HOOKER/RUCO SITE

Receptor: Construction Workers

Exposure Route	Ingestion	Dermal Contact	Inhalation
Exposure Frequency *days/year*	250	250	250
Exposure Duration *years/life time*	1	1	1
Body Weight *kg*	70	70	70
Bioavailability Factor	1	0.5	1
Ingestion Rate *mg/day*	100	-	-
Skin Surface Area *cm2*	-	5000	-
Soil Deposition Rate *mg/cm2*	-	1	-
Exposure Time *hours/day*	8	8	8
Inhalation Rate *m3/hr*	-	-	3
Absorption Factors %	-	0.5-PCBs 3-Cadmium	-

TABLE 7-15
HOOKER/RUCO SITE
SUMMARY ACROSS EXPOSURE PATHWAYS
PRESENT/FUTURE USE SCENARIOS-RESIDENTS ADULTS

Present/Future Use Scenarios: Off-Site Adult Residents	Carcinogenic Risk Levels Reasonable Maximum Exposure	Noncarcinogenic Hazard Index Values Reasonable Maximum Exposure
1) Exposure to Surface Soil		
Inhalation	6.40E-09	1.64E-09

Total Health Risk = Surface soil inhalation

SUMMATION RESULTS

Carcinogens

Reasonable Maximum Exposure= 6.40E-09

Noncarcinogens

Reasonable Maximum Exposure= 1.64E-09

TABLE 7-15
HOOKER/RUCO SITE
SUMMARY ACROSS EXPOSURE PATHWAYS
PRESENT/FUTURE USE SCENARIOS-RESIDENTS ADULTS

Future Use Scenarios: Fence-Line Adult Residents	Carcinogenic Risk Levels Reasonable Maximum Exposure	Noncarcinogenic Hazard Index Values Reasonable Maximum Exposure
1) Exposure to Ground Water		
Ingestion	2.21E-03	4.89E+00
Inhalation	5.06E-04	5.82E-02
Dermal Contact	1.12E-04	2.01E-01
2) Exposure to Surface Soil		
Inhalation	6.40E-09	1.64E-09

Total Health Risk = Ground water ingestion + Ground water inhalation + Ground water dermal contact + Surface soil inhalation

SUMMATION RESULTS

Carcinogens

Reasonable Maximum Exposure= 2.83E-03

Noncarcinogens

Reasonable Maximum Exposure= 5.15E+00

TABLE 7-16
HOOKER/RUCO SITE
SUMMARY ACROSS EXPOSURE PATHWAYS
PRESENT/FUTURE USE SCENARIOS-RESIDENT CHILDREN

Present/Future Use Scenarios: Off-Site Child Residents	Carcinogenic Risk Levels Reasonable Maximum Exposure	Noncarcinogenic Hazard Index Values Reasonable Maximum Exposure
1) Exposure to Surface Soil		
Inhalation	2.56E-09	3.28E-09

Total Health Risk = Surface soil inhalation

SUMMATION RESULTS

Carcinogens

Reasonable Maximum Exposure= 2.56E-09

Noncarcinogens

Reasonable Maximum Exposure= 3.28E-09

TABLE 7-16
HOOKER/RUCO SITE
SUMMARY ACROSS EXPOSURE PATHWAYS
PRESENT/FUTURE USE SCENARIOS-RESIDENT CHILDREN

Future Use Scenarios: Off-Site Child Residents	Carcinogenic Risk Levels Reasonable Maximum Exposure	Noncarcinogenic Hazard Index Values Reasonable Maximum Exposure
1) Exposure to Ground Water		
Ingestion	8.84E-04	1.02E+01
Inhalation	1.09E-04	1.25E-01
Dermal Contact	1.34E-05	1.22E-01
2) Exposure to Surface Soil		
Inhalation	2.56E-09	3.28E-09

Total Health Risk = Ground water ingestion + Ground water inhalation + Ground water dermal contact + Surface soil inhalation

SUMMATION RESULTS

Carcinogens

Reasonable Maximum Exposure= 1.01E-03

Noncarcinogens

Reasonable Maximum Exposure= 1.04E+01

TABLE 7-17
HOOKER/RUCO SITE
SUMMARY ACROSS EXPOSURE PATHWAYS
PRESENT/FUTURE USE SCENARIOS-CHILD TRESPASSERS

Present/Future Use Scenarios: Child Trespassers	Carcinogenic Risk Levels Reasonable Maximum Exposure	Noncarcinogenic Hazard Index Values Reasonable Maximum Exposure
1) Exposure to Surface Water		
Dermal Contact	9.05E-05	2.08E-02
2) Exposure to Sediment		
Ingestion	6.11E-06	3.34E-02
Inhalation	8.48E-11	4.16E-12
Dermal Contact	2.56E-06	
3) Exposure to Surface Soil		
Ingestion	1.12E-05	2.38E-03
Inhalation	2.79E-10	5.25E-10
Dermal Contact	1.40E-06	

Total Health Risk = Surface water dermal contact + Sediment Ingestion + Sediment dermal contact + Sediment inhalation + Surface soil ingestion + Surface soil inhalation + Surface soil dermal contact

SUMMATION RESULTS

Carcinogens

Reasonable Maximum Exposure= 1.12E-04

Noncarcinogens

Reasonable Maximum Exposure= 5.66E-02

TABLE 7-18
HOOKER/RUCO SITE
SUMMARY ACROSS EXPOSURE PATHWAYS
PRESENT/FUTURE USE SCENARIOS- SITE WORKERS

Present/Future Use Scenarios: Site Workers	Carcinogenic Risk Levels Reasonable Maximum Exposure	Noncarcinogenic Hazard Index Values Reasonable Maximum Exposure
1) Exposure to Surface Water		
Dermal Contact	1.05E-04	7.30E-03
2) Exposure to Sediment		
Ingestion	2.78E-06	6.43E-03
Inhalation	1.23E-09	1.39E-11
Dermal Contact	2.42E-06	2.64E-04
3) Exposure to Surface Soil		
Ingestion	4.93E-05	5.83E-03
Inhalation	4.23E-09	1.30E-09
Dermal Contact	4.52E-05	5.46E-07

Total Health Risk = Surface water dermal contact + Sediment ingestion + Sediment dermal contact + Sediment inhalation + Surface soil ingestion + Surface soil inhalation + Surface soil dermal contact

SUMMATION RESULTS

Carcinogens

Reasonable Maximum Exposure= 2.05E-04

Noncarcinogens

Reasonable Maximum Exposure= 1.98E-02

TABLE 7-19
HOOKER/RUCO SITE
SUMMARY ACROSS EXPOSURE PATHWAYS
FUTURE USE SCENARIOS-CONSTRUCTION WORKERS

Present/Future Use Scenarios: Construction Workers	Carcinogenic Risk Levels Reasonable Maximum Exposure	Noncarcinogenic Hazard Index Values Reasonable Maximum Exposure
1) Exposure to Surface Soil		
Ingestion	2.11E-06	2.71E-03
Inhalation	1.69E-10	1.91E-09
Dermal Contact	1.81E-06	
2) Exposure to Subsurface Soil		
Ingestion	3.19E-06	1.35E-02
Inhalation	5.57E-10	7.53E-10
Dermal Contact	4.98E-06	

Total Health Risk = Surface soil ingestion + Surface soil inhalation + Surface soil dermal contact + Subsurface soil Ingestion + Subsurface soil inhalation + Subsurface soil dermal contact

SUMMATION RESULTS

Carcinogens

Reasonable Maximum Exposure= 1.21E-05

Noncarcinogens

Reasonable Maximum Exposure= 1.62E-02

SECTION 8.0

HKR 001 1567

8.0 UNCERTAINTY IN THE RISK ASSESSMENT

The quantitative assessment of health effects at hazardous waste sites is inherently uncertain. This uncertainty arises from the need to predict potential future health impacts (often quite subtle or infrequent events) in the absence of observed health effects, and on the basis of limited data concerning contaminant levels, transport mechanisms, receptor behavior and the toxicologic behavior of the chemicals present. In the face of this unavoidable uncertainty, the general approach that has been employed in this assessment is to first develop conservative estimates of contaminant exposures, doses and health risks for each medium, exposure routes and exposed populations, in an effort to screen out combinations (scenarios) that do not pose potential risks even under very conservative assumptions. For maximum case exposure, scenarios are defined to provide additional information as to whether the specific contaminant / pathway / receptor scenario is, in fact, likely to be associated with adverse health effects. These reasonable maximum case exposure scenarios, while providing a much more likely assessment of contaminant exposure and health risks, are still uncertain, and contain a number of inherently conservative assumptions which provide an additional "margin of error" for interpreting the quantitative risk estimates. The major sources of uncertainty in the risk estimates, which are summarized in Table 8-1, are discussed below.

8.1 UNCERTAINTIES ASSOCIATED WITH SAMPLING AND ANALYTICAL PROCEDURES

A major group of factors contributing to uncertainty in the risk analysis are the uncertainties in exposure point concentration estimates associated with the sampling and analytical procedures used to define contaminant levels in contaminated media. In this assessment, available data from the RI, largely generated by LBG, were used to assess contaminant levels. Limited sampling of surface waters and air contribute to uncertainty. All off-site groundwater samples were not used in the data base for this risk assessment, which may impact the analysis as well. These risks will be addressed in a separate operable unit.

The determination of the contaminant concentration to input into the models also provides some uncertainty. Pursuant to EPA directives, (Ebasco's March 7, 1990 meeting regarding guidance issues from the Risk Assessment Guidance for Superfund (RAGS, 1989), it was determined that the contaminant concentration used for the quantification of risk should be the 95 percent UCL on the geometric mean. This value provides a reasonable, conservative estimate of the reasonable maximum risks when coupled with the use of conservative exposure parameters. This method, however, assumes that the data have a geometric distribution, which contributes further to uncertainty if this is not the case for a given compound. Under these conditions, the method

recommended to calculate the UCL results in inflated and probably incorrect, relative to the maximum value in the untransformed data.

Incorporation of these UCLs into the risk calculations would result in overly conservative, unrealistic levels which are not representative of the actual site data. Therefore, when the 95 percent UCLs on the geometric mean exceeded the actual maximum contaminant concentrations detected, the maximum contaminant concentrations were used for the risk calculations.

8.2 UNCERTAINTIES ASSOCIATED WITH EXPOSURE AND INTAKE ASSESSMENT METHODS

This is an active manufacturing facility, with potential for exposure to toxic chemicals from both historical and current operations. This adds uncertainty to the risk analysis because we have discounted some pathways of exposure due to potential interference from the current operations. The air pathways are not evaluated, because of the current permitted and fugitive emissions at the plant. Most occupational exposures are not assessed, as we have no data from inside the plants, and it is not within the scope of the Superfund program to address such exposures. However, it is the plant workers who are most likely to be at risk. We have addressed occupational exposures that may result from historical practices and the resulting site contamination.

An additional source of uncertainty in exposure and dose estimates is defining future exposure given potential changes in site circumstances. This also applies the present use exposure scenarios because carcinogenic risk assessment includes a full 70-year lifetime exposure. Estimating exposures for future land use scenarios, where pathways are not yet complete is highly speculative. Assumptions must be made regarding future site activities, development patterns, and receptor behavior. In this assessment, this factor contributes most uncertainty in future use scenarios including exposures during wastewater treatment plant construction and for fenceline residents.

Input parameters for models are defined conservatively, but realistically, so that if a pathway or scenario shows calculated risk levels below levels of concern, there can be a substantial degree of certainty that risks are not actually above that calculated level. Additionally, the use of default values to estimate exposure may impact the results of the risk analysis. The use of the benzo(a)pyrene slope factor to represent all carcinogenic PAHs in the risk analysis also adds to uncertainty. In this risk assessment, benzo(a)pyrene concentrations are a small part of the total concentration for carcinogenic PAHs, but use of its high slope factor in the total PAH calculations, in accordance with EPA guidance, magnifies the potential risk from this class of compounds. A similar issue arises in calculating the risk from nickel detected at the site. The

assumption is made that all nickel detected is a Class A carcinogen nickel soluble salt, which tends to exaggerate the risk from this constituent, as well. Inclusion of arsenic, which is assumed as having been used or disposed of on-site, because it was not detected at upgradient sampling points, also tends to overestimate risk.

The added uncertainty to the risk assessment is especially significant for the reasonable maximum case scenario, which uses more conservative exposure assumptions, as is the case for this risk assessment. In several scenarios, particularly those for site workers and child trespassers, worst case parameters are used. It is assumed, for example, that maintenance of the sumps occurs on a regular schedule and takes eight hours to perform. Children are assumed to spend five hours playing on-site, which is the assumed total average play time for a day in RAGS.

In accordance with recent Superfund guidance, average case scenarios were developed for the significant contaminants in the pathways that drive risks. In this risk assessment, those pathways included residential groundwater ingestion, site worker contact with surface water and site worker incidental soil ingestion. The carcinogenic total risk for adult residents via groundwater ingestion is 8.14E-05 for the average case scenario. The potential carcinogenic total risk for child residents 1.08E-04. The noncarcinogenic Hazard Index for the adult resident groundwater ingestion pathway is 9.12E-01, which is less than the Hazard Index of 1. The Hazard Index for the child resident groundwater ingestion pathway is exceeded, at 1.91. The potential carcinogenic total risk to site workers through dermal contact with surface water is 1.40E-04. The carcinogenic total risk to site workers via soil ingestion is 2.05E-06. The noncarcinogenic results for site workers through dermal contact with surface water and ingestion soil dust are 2.06E-03 and 5.88E-03, respectively. These are below the Hazard Index of 1.0. The calculations are shown in table C-26 to C-28.

These results indicate that the potential noncarcinogenic risks to child residents from ingesting groundwater remain at levels exceeding the Hazard Index of 1.0 in the average case scenarios.

8.3 UNCERTAINTIES ASSOCIATED WITH TOXICOLOGIC MODELS AND PARAMETER ESTIMATES

In accordance with EPA guidance (USEPA, 1986 and RAGS, 1989), the magnitude of carcinogenic risks and noncarcinogenic effects were calculated using the simple toxicologic models described in Section 6.6, and toxicological parameters (reference doses and slope factors) derived by EPA for specific site indicator compounds contained in EPA's IRIS data base or HEAST. As stated previously, there are several chemicals for which no toxicological criteria are available. This may cause an underestimation of the risk from all media in which it is present.

Also in accordance with EPA guidance (USEPA, 1989), risks for multiple contaminant exposures were assumed to be additive for carcinogens. The use of these simple toxicologic models, and their application to several specific indicator compounds at the site, introduce a substantial degree of uncertainty into the site-related risk estimates.

Slope factors (SFs) are usually derived from the application of complex dose-response models in a multi-stage model for cancer induction to animal bioassay data. The assessment of dose-response parameters from bioassay data involves using technical judgements which complicate the analysis. In addition, the quality of the studies upon which the derivation of SFs is based may be quite variable. Among the judgements which can strongly affect the value of the SF are the selection of an appropriate study (where more than one is available), difficulties recognizing and classifying tumors in experimental animals, whether to pool tumors from different organs, how to extrapolate relatively high doses from animal studies to human exposures and whether to discard data for certain dosage groups if doing so yields substantially better agreement with the expected response dictated by the multistage model. Dose-response parameters derived using this method are inherently quite unstable. Therefore, EPA uses the 95 percent UCL of the slope for Q_1* (the linear parameter in the multistage dose-response model) which is more stable, as the basis for their SF derivation. This may reduce the overall uncertainty in the parameter value somewhat, but it introduces yet another layer of conservatism into the risk assessment. At the Hooker/Ruco site, these considerations apply to many of the organic and some of the inorganic compounds whose SFs were derived from animal bioassay data.

Reference Doses (RfDs) are also generally derived from animal studies of chemical exposure (as described in Section 5.3). Their development involves the use of "uncertainty factors", the values of which depend upon the type of study used (animal or human, and chronic, subchronic or acute dosing) and the endpoints observed (NOAELs - no observed adverse effect level or LOAELs - lowest observed adverse effect level). These factors range from 1 to 10,000 depending upon the judgement of the individuals evaluating the data. There is only a very limited theoretical basis for this approach to defining acceptable chemical intakes. In particular, for the RfDs derived from acute animal studies, or LOAELs (which have very high uncertainty factors), the derived RfD values must be interpreted very cautiously in the calculation of noncarcinogenic effects. It is generally agreed that the high uncertainty factors used in these cases are meant to provide a very high level of assurance that the RfD level will not result in adverse impacts to humans.

TABLE 8-1

Hooker/Ruco Site
Sources of Uncertainty in the Risk Assessment

Source of Uncertainty	*Likely Magnitude of Uncertainty*	*Level of Bias Introduced*
1. Sampling/Analytical Procedures		
Reasonable maximum case exposure point concentrations calculated using 95% UCLs on the geometric mean of all analyses.	Low to moderate	Slight downward bias.
Highest contaminant levels used to develop reasonable maximum case exposure estimates when exceeded by 95% UCL.	Low	Gives realistic contaminant level for calculation of reasonable maximum risk.
Contaminant levels from borings into sumps used to develop subsurface soil pathways.	Moderate	Moderate upward bias of exposure estimates.
2. Exposure/Intake Assessment Methods		
Potential for varying future land use.	Moderate	Moderate upward bias, construction of residences at fenceline is unlikely.
Particulate generation and transport	Moderate to high; estimates of hard to quantify conditions, processes and parameters are required.	Moderate upward bias of exposure estimates.

TABLE 8-1

Hooker/Ruco Site
Sources of Uncertainty in the Risk Assessment

Exposure estimates assume contaminants are conservative over time	Moderate for future use scenario exposures	Slight to moderate upward bias for future scenarios.
Estimates of physiological, behavioral parameters for receptors	Low - parameters are defined for special populations	Slight, if any.
Estimates of exposure frequency/duration	Low to moderate - scenarios incorporate ranges of uncertainties concerning likely exposures	Slight to moderate upward bias.
Estimates of contaminant contact rates, intake factors.	Moderate	Moderate upward bias .
3. Toxicologic/Risk Characterization Methods		
RfD/CDI ratios to characterize non-cancer health effects.	Moderate to high - data supporting RfD developments are highly variable; uncertainty factors vary by orders of magnitude.	RfDs are likely to be defined conservatively for most pollutants.
Lack of toxicity criteria for certain chemicals.	Low to moderate; concentrations and distribution of chemicals in site matrices vary; potential health effects vary.	Calculated risks for media may be understated.

TABLE 8-1

Hooker/Ruco Site
Sources of Uncertainty in the Risk Assessment

Speciation of Chromium - 7:1 Ratio of Cr III to Cr VI.	Moderate	Unknown - inadequate data on speciation of chromium on-site.
SFs, linear low-dose model to assess cancer risks.	Moderate to high - most SFs are derived from animal bioassay data.	Likely upward bias; SFs are 95% UCLs of cancer risk slopes.
Assumption that effects of multiple contaminant exposures are additive.	Low to moderate.	Unknown if synergies or antagonisms exist among contaminants.

SECTION 9.0

HKR 001 1575

9.0 ECOLOGICAL ASSESSMENT

9.1 BACKGROUND

Ecological assessments of the effects of xenobiotic chemicals on ecosystems are conducted utilizing exposure and toxicity data to generate an estimate of potential impacts. In this regard, the procedures followed are not unlike those of a human health risk assessment. However, ecological impacts or "risks" are typically evaluated for a variety of receptors due to the diversity of organisms which comprise a community. In a human health risk assessment, potential impacts to individuals and populations are evaluated. Ecological assessments are typically performed at the population and community levels, and subsequent inferences drawn at the ecosystem level. The exceptions are threatened and endangered species which are assessed on an individual level, since protection of each individual is important to the survival of the species, and possibly to the integrity of the biotic community. There were no endangered or threatened species identified in the RI for this site.

Information required to establish a causal relationship between contaminants and adverse ecological effects include: 1) chemical analyses of all potentially contaminated site media both on-site and at reference background locations to establish the presence, concentrations, and distributions of specific elements or compounds, 2) site-specific ecological surveys to evaluate the biotic community structure and morphological/physiological condition of representative organisms from various habitats with reference to regional background locations, and 3) toxicity ecological impacts and site contaminants. Due to the relative cost involved, the latter are rarely performed at USEPA CERCLA sites. Rather, ecological "benchmarks" derived from literature values for similar ecosystems are utilized to assess potential risks associated with contaminant levels attributed to the site (USEPA, 1989a,b).

9.2 IMPACT CHARACTERIZATION

Exposure Pathways

Numerous direct and indirect pathways exist through which biota may be exposed to contaminants at hazardous waste sites. Exposure routes and media may differ between various populations and communities due to physiological and behavioral differences as well as zonation of various habitat types.

However, the Hooker/Ruco site is fully developed as an industrial facility, and is surrounded by similar types of land use. There are no natural surface water bodies or wetlands within the site vicinity. The only observed animal life on-site were Canadian geese, that are nesting in known

contaminated areas. However, they are not expected to be part of a higher food chain, and therefore any impacts to the geese on site are not expected to affect the area wildlife population.

9.3 EXTENT OF CONTAMINATION

This Risk Assessment includes only those risks posed by on-site contamination. The only surface water samples are from the site sumps, as are the sediment samples. There is contaminated soil on site, but it is not a habitat for any wildlife that may impact the food chain or that are threatened or endangered species.

HKR 001 1577

10.0 RISK ASSESSMENT SUMMARY

10.1 HUMAN HEALTH RISK ASSESSMENT SUMMARY

The approach taken to this risk assessment was to employ simple EPA-approved exposure models, coupled with conservative assumptions about exposure conditions, to generate screening-level reasonable maximum case estimates of the baseline (assuming no further remedial action) health risks associated with chemical contamination of environmental media.

Indicator chemicals (compounds and chemical classes for which a quantitative risk assessment was performed) were identified for each medium on the basis of their frequency of occurrence, levels of occurrence, demonstrated relationship to site activities, local and regional background levels, toxicity concentration screen and availability of toxicological parameters for risk assessment.

Reasonable maximum case exposure scenarios were developed using the 95th percent UCL contaminant concentrations, or the maximum concentration if the UCL value exceeded the maximum concentration, combined with conservative but realistic pathways of exposure. Exposure pathways chosen for quantitative analysis at this site, which were included in the scope of work and/or for which there is available data, include ingestion, inhalation, and dermal contact with groundwater by child and adult residents at the fenceline in a future use scenario; inhalation of surface water contaminants from the sumps by adult site workers and child trespassers; direct contact with sump sediment during recreational use and maintenance of the sumps; and ingestion, inhalation, and direct contact with surface and subsurface soil by site and future construction workers. Pathways evaluated on a qualitative basis include off-site groundwater and air emissions.

Results of this reasonable maximum exposure scenario risk assessment indicate the potential for future carcinogenic health risks to fenceline resident adults and children from exposure to contaminated groundwater via ingestion, and to adults only via inhalation. The noncarcinogenic risks to future resident adults and children via groundwater ingestion are also of concern.

These results indicate that future adult residential groundwater use and exposure via inhalation and ingestion are the major pathways of exposure with potential health effects from carcinogens and noncarcinogens.

Average case scenarios were also developed for those pathways found to be driving site risks in the reasonable maximum case analysis. Results of the average case quantitative assessment

indicate that only future child residents ingesting groundwater have a potential noncarcinogenic risk which exceeds the Hazard Index of 1.0.

There is no indication of potential carcinogenic or noncarcinogenic risk to site workers.

10.2 CONCLUSIONS OF ECOLOGICAL ASSESSMENT

There are no natural surface water bodies on or in proximity to the site. The RI sampling program included analysis of materials from the discharge sumps, and associated bottom sediments. The site and its surroundings are fully developed as industrial/commercial/residential areas. There are no significant ecological resources in the area of the site, and no evident pathways by which site contaminants could migrate and create ecological risk concerns.

HKR 001 1580

REFERENCES

HKR 001 1581

REFERENCES AND BIBLIOGRAPHY

RISK ASSESSMENT

Barnthouse, L.W., D.L. De Angelis, R.H. Gardner, R.V. O'Neil, C.D. Powers, G.W. Suter, and D.S. Vaughn, 1982. Methodology for environmental risk analysis. Environ. Sci. Div. Pub. No. 2023. Oak Ridge National Laboratory, Oak Ridge, TN.

Clayton, G. and Clayton, F. 1981-1982. Patty's Industrial Hygiene and Toxicology: Volumes 2A, 2B, 2C: Toxicology. 3rd ed. New York: John Wiley & Sons.

Clement Associates, 1985. Chemical Physical and Biological Properties of Compounds Presented at Hazardous Waste Sites: Final Report. Prepared for U.S. Environmental Protection Agency.

Cowherd, C., Jr., Muleski, G.E., Englehart, P.J., and Gillette, D.A., 1985. "Rapid Assessment of Exposure to Particulate Emissions from Surface Contamination Sites," USEPA Publication Number 600/8-85/002.

Ebasco Services, Inc., Draft Endangerment Assessment RI/FS Oversight Report, Hooker/Ruco Site, Hicksville, New York, June 1990. Prepared for USEPA, New York, NY.

Ebasco Services, Inc., Draft Field Operations Plan, Operable Unit 2 RD/RA Oversight Report, Hooker/Ruco Site, Hicksville, New York, March 1992. Prepared for USEPA, New York, NY.

Ebasco Services, Inc., Draft Remedial Investigation Oversight Report, Hooker/Ruco Site, Hicksville, New York, March 1991. Prepared for USEPA, New York, NY.

Eisler, R. 1987. Polycyclic aromatic hydrocarbon hazards to fish, wildlife and invertebrates: a synoptic review. USFWS Biol. Rep. 85 (1.11). 81 pp.

Eisler, R., 1985. Cadmium hazards to fish, wildlife and invertebrates: a synoptic review. USFWS Biol. Rep. 85 (1.2). 46 pp.

Feldmann, R.J. and Maibach, H. I., 1970. "Absorption of Some Organic Compounds Through the Skin in Man," Journal of Investigative Dermatology, 54 (5):399-404.

Foster, S.A. and Chrostowski, P.C., 1987. "Inhalation Exposures to Volatile Organic Contaminants in the Shower," presentation at the 80th Annual Meeting of APCA, New York, NY.

Haley, T. and Berndt, W., 1987. Handbook of Toxicology. Hemisphere Publishing Corporation, New York. p. 533.

Hawley, J.K., 1985. Assessment of Health Risk from Exposure to Contaminated Soil. Risk Analysis, 5:289-302.

Integrated Risk Information System (IRIS), 1992. See USEPA, 1992.

International Agency for Research on Cancer (IARC), 1982, "IARC Monographs on the Evaluation of the Carcinogenic Risk of Chemicals to Humans."

ICRP, 1980. Annals of the ICRP, Publication 30, Pergamen Press, Elmsford, N.Y.

Klaassen, C.D., Amdur, Mo.O., and Doull, J. (eds.), 1986. Casarett and Doull's Toxicology: The Basic Science of Poisons. Third Edition, Macmillan Publishing Co., New York.

Leggette, Brashears, and Graham, Draft Remediation Investigation Report, Hooker/Ruco Site, Hicksville, New York, April 1990. Prepared for Occidental Chemical Corporation, Niagara Falls, New York.

Leggette, Brashears, and Graham, Remedial Investigation/Feasibility Study Report Outline and Supplemental Data Collection Work Plan, Ruco Polymer Corporation Site, Hicksville, New York, October 13, 1987. Prepared for Occidental Chemical Corporation, Niagara Falls, New York.

Long, E.R. and L.G. Morgan, 1990. The potential for biological effects of sediment-sorbed contaminants tested in the National Status and Trends Program. NOAA Technical Memorandum NOS OMA 52.

Pasquill, F., "The dispersion of material in the atmospheric boundary layer - the basis for generalization," In: Future on Air Pollution and Environmental Analysis. Boston, MA, American Meteorologic Society.

RAGS, 1989. "Risk Assessment Guidance for Superfund," Interim Final, September, 1989, OSWER Directive 9285.7-01a.

Schaum, J., 1985. Risk Analysis of TCDD Contaminated Soil, USEPA Office of Health and Environmental Assessment, Office of Research and Development, Washington, D.C. USEPA600/8-84-031.

Sittig, M. 1985. Handbook of Toxic and Hazardous Chemicals and Carcinogens, 2nd ed. Noyes Publications, Park Ridge, New Jersey.

USEPA, 1979. Water-related fate of 129 priority pollutants. Vol. I. EPA 440/4-79-029.

USEPA, 1980. Ambient water quality criteria for endrin, Office of Water Regulations and Standards, Criteria and Standards Division - Washington, DC.

USEPA, 1980a. Ambient water quality criteria for phthalate esters. Office of Water Regulations and Standards, Criteria and Standards Division, Washington, D.C. October.

USEPA, 1980b. Ambient water quality criteria for polynuclear aromatic hydrocarbons. OWRS. EPA 440/5-80-069.

USEPA, 1980c. Ambient water quality criteria for antimony. OWRS. EPA 440/5-80-020.

USEPA, 1980d. Ambient water quality criteria for cadmium. OWRS. EPA 440/5-80-025.

USEPA, 1985. "Health Advisory for trans-1,2-Dichloroethene," Office of Drinking Water, Washington, D.C., September 1985.

USEPA, 1986. Quality criteria for water, 1988. OWRS. EPA/540/G-88/003.

USEPA, 1986a. "Guidelines for Carcinogenic Risk Assessment," Fed. Reg. 33992-34002, September 24, 1986.

USEPA, 1986b. "Guidelines for the Health Risk Assessment of Chemical Mixtures," Reg. 51:34014-34023, September 24, 1986.

USEPA, 1987. Interim Guidance on Compliance with Applicable or Relevant and Appropriate Requirements. Memorandum.

USEPA, 1988. "Superfund Exposure Assessment Manual," Publication Number 540/1-88/001, OSWER Directive 9285.5-1.

USEPA, 1988a. "Guidance for Conducting Remedial Investigation and Feasibility Studies Under CERCLA," Interim Final, October 1988, OSWER Directive 9335.3-01.

USEPA, 1988b. Interim sediment criteria values for nonpolar hydrophobic organic compounds. OWRS. SCD 17.

USEPA, 1989a. "Exposure Factors Handbook" Exposure Assessment Group, Office of Health & Environmental Assessment, USEPA, Washington, DC., USEPA/600/8-89/043.

USEPA, 1989b. Ecological assessment of hazardous waste sites: a field and laboratory reference. EPA 600/3-89/013.

USEPA, 1989c. Risk assessment guidance for Superfund. Vol. II. Environmental evaluation manual. Interim Final. EPA 540/1-89/001.

USEPA, 1990. "Role of the Baseline Risk Assessment in Superfund Remedy Selection Decisions," OSWER Directive 9355.0-30.

USEPA, 1991. "Integrated Risk Information System (IRIS)," Environmental Criteria and Assessment Office, Cincinnati, Ohio, June 1992-On Line Sessions.

USEPA, 1991. Health Effects Assessment Summary Tables, Fourth Quarter FY-1990, OSWER (OS-230).

USEPA, December 11, 1991. Comments on Remedial Investigation Report for Hooker/Ruco Site, Hicksville, New York.

USEPA, 1992. Dermal Exposure Assessment: Principles and Applications (DEAPA). Office of Health and Environmental Assessment, Washington, DC 20460, EPA/600/8-91/011B.

Yang, J.J., Roy, T.A. and Mackerer, C.R. 1986a. "Percutaneous Absorption of Anthracene in the Rat: Comparison of in Vivo and in Vitro Results," Toxicol. Ind. Hlth, 2(1):79-84.

Yang, J.J., Roy, T.A. and Mackerer, C.R., 1986b. "Percutaneous Absorption of Benzo(a)pyrene in the Rat: Comparison of in Vivo and in Vitro Results," Toxicol. Ind. Hlth., 2(4):409-416.

CONTAMINANT FATE AND TRANSPORT

Baes, C.F., R.D. Sharp, A.L. Sjoreen, and R.W. Sor, 1984. A review and analysis of parameters for assessing transport of environmentally released radionuclides through agriculture. Oak Ridge National Laboratory, ORNL-DWG81-15953.

Clement Associates, Inc., 1985. Chemical, Physical, and Biological Properties of Compounds Present at Hazardous Waste Sites. Arlington, Virginia, Report Prepared for USEPA.

Dragun, J., 1988. The Soil Chemistry of Hazardous Materials. Hazardous Materials Control Research Institute, Silver Spring, Maryland, 458 pp.

Edwards, N.T., 1983. Polycyclic Aromatic Hydrocarbons (PAHs) in the Terrestrial Environment - A Review. J. Environ. Qual. 12:427-441.

Hem, J.D., 1970. Study and Interpretation of the Chemical Characteristics of Natural Water. U.S. Geological Survey Water Supply Paper 1473.

Hoffman, S.J., 1986. Soil Sampling in Fletcher, W.K. et al., eds., Exploration Geochemistry: Design and Interpretation of Soil Surveys Soc. Econ. Geol., Reviews in Econ. Geol. Vol. 3, p. 39-77.

Karickhoff, S.W. et al., 1979. Sorption of hydrophobic pollutants on natural sediments. Water Res. 13:24-248.

Levinson, A.A., 1980. Introduction to Exploration Geochemistry, Second Edition. Applied Publishing, 924 pp.

Lyman, W.J., W.G. Reehl, and D.H. Rosenblatt, 1982. Handbook of Chemical Property Estimation Methods: Environmental Behavior of Organic Compounds. McGraw-Hill, New York.

Merck, 1990. The Merck Index, 11th Edition. Merck & Co., Inc., Rahway, New Jersey.

U.S. Environmental Protection Agency (USEPA), 1979. Water-related environmental fate of 129 priority pollutants. Volumes I and II. USEPA, Washington, D.C., Research Report EPA-440/4-79-029.

U.S. Environmental Protection Agency (USEPA), 1986. Superfund Public Health Evaluation Manual. USEPA Office of Emergency and Remedial Response, Washington, D.C. Publication EPA 540/1-86/060.

Verschueren, K., 1983. Handbook of Environmental Data of Organic Chemicals. New York, Van Nostrand Rheinhold Co.

APPENDIX A

APPENDIX A
CHEMICAL SUMMARY

HKR 001 1588

WOOKER CHEMICAL/RUCO POLYMER SITE
SUMMARY OF CHEMICAL COMPOUNDS (DETECTS + UNDETECTS/2)
SEDIMENT INSIDE & OUTSIDE SPILL AREA

COMPOUND	VALID	OCCUR	UN-DETECT	EST	REJECT	FREQ DETECT	MINIMUM DETECTED CONCENTRATION	SAMPLE ID	MAXIMUM DETECTED CONCENTRATION	SAMPLE ID	MEDIAN CONCENTRATION	GEOMETRIC MEAN	MEAN CONCENTRATION	LOWER QUARTILE	UPPER QUARTILE	STNDRD. DEV.	95% CI UPPER LIMIT
[] Volatile (VOA) ug/Kg																	
(Halogenated Volatiles)																	
TETRACHLOROETHENE	10	2	8	2	2	0.20	0.300	TB 29 8 10	0.600	TB 29 6 8D	1.000	0.842	0.890	1.000	1.000	1.487	1.201 X
TRANS-1,2-DICHLOROETHENE	12	2	10	2	0	0.17	34.000	TB 28 8 10	76.000	TB 28 6 8	1.000	1.925	10.000	1.000	1.000	4.659	48.925
TRICHLOROETHENE	12	2	10	2	0	0.17	1.000	TB 28 8 10	2.000	TB 28 6 8	1.000	0.944	1.000	1.000	1.000	1.429	1.251
					TOTAL	====>	35.300		78.600								
(Non-Halogenated Volatiles)																	
ETHYLBENZENE	12	7	5	6	0	0.58	0.900	TB 29 6 8D	120.000	TB 28 8 10	3.500	4.127	21.367	1.000	19.000	5.876	280.033 X
STYRENE	8	1	7	1	4	0.13	0.600	TB 29 8 10	0.600	TB 29 8 10	1.000	0.938	0.950	1.000	1.000	1.198	1.092 X
TOLUENE	4	2	2	2	8	0.50	1.000	TB 29 6 8	9.000	TB 29 0 2	6.000	2.280	3.500	1.000	9.000	2.863	80341.332 X
					TOTAL	====>	2.500		129.600								
[] Pesticide/Polychlorinated Biphenyl (PEST/PCB) ug/Kg																	
(PCBs)																	
AROCLOR 1248	12	7	5	0	0	0.58	1400.000	TB 29 8 10	10000.000	TB 30 0 2	2100.000	781.224	2704.583	95.000	5400.000	7.229	106606.002 X
					TOTAL	====>	1400.000		10000.000								
[] Inorganic (INORG) mg/Kg																	
ALUMINUM	12	6	6	6	0	0.50	1000.000	TB 28 6 8	3000.000	TB 29 8 10	1500.000	1234.067	1400.000	950.000	1700.000	1.700	2042.967
ANTIMONY	12	4	8	1	0	0.33	8.000	TB 28 6 8	13.000	TB 28 8 10	8.000	5.339	6.958	3.000	11.000	2.250	14.490 X

NOTE: (X), IN 95% CI COLUMN, INDICATES VALUE IS GREATER THAN MAXIMUM CONCENTRATION; (*), ASTERISKS, INDICATE THAT THE NUMBER OF OCCURRENCES IS TOO SMALL TO ALLOW CALCULATION

HOOKER CHEMICAL/RUCO POLYMER SITE
SUMMARY OF CHEMICAL COMPOUNDS (DETECTS + UNDETECTS/2)
SEDIMENT INSIDE & OUTSIDE SPILL AREA

COMPOUND	VALID	OCCUR	UN-DETECT	EST	REJECT	FREQ DETECT	MINIMUM DETECTED CONCENTRATION	SAMPLE ID	MAXIMUM DETECTED CONCENTRATION	SAMPLE ID	MEDIAN CONCENTRATION	GEOMETRIC MEAN	MEAN CONCENTRATION	LOWER QUARTILE	UPPER QUARTILE	STNDRD. DEV.	95% CI UPPER LIMIT
ARSENIC	12	6	6	0	0	0.50	1.100	TB 28 8 10	7.100	TB 29 0 2	1.250	1.298	1.800	0.900	2.300	2.221	3.312
BARIUM	12	6	6	0	0	0.50	7.800	TB 29 6 8D	16.000	TB 29 0 2	10.400	8.206	9.513	4.900	15.000	1.830	15.289
CADMIUM	12	6	6	6	0	0.50	1.900	TB 29 0 2	9.000	TB 29 6 8	2.750	0.858	2.919	0.085	6.600	7.289	120.511 X
CALCIUM	12	6	6	0	0	0.50	170.000	TB 29 6 8D	700.000	TB 29 0 2	295.000	200.450	265.833	85.000	380.000	2.308	567.160
CHROMIUM	12	6	6	0	0	0.50	18.000	TB 28 6 8	63.000	TB 29 0 2	31.750	26.604	31.333	16.500	54.000	1.828	49.499
COBALT	12	5	7	0	0	0.42	0.260	TB 28 6 8	2.500	TB 29 8 10	0.900	0.576	0.902	0.285	1.200	2.989	3.212 X
COPPER	12	6	6	0	0	0.50	5.400	TB 29 6 8D	80.000	TB 29 0 2	14.500	11.225	19.646	5.400	38.000	3.038	64.797
IRON	12	6	6	6	0	0.50	1400.000	TB 28 6 8	6900.000	TB 29 8 10	2425.000	1793.697	2645.833	800.000	5100.000	2.609	6597.382
LEAD	12	6	6	6	0	0.50	2.600	TB 29 6 8	59.000	TB 29 0 2	10.250	7.819	14.737	3.100	25.500	3.150	48.772
MAGNESIUM	12	6	6	6	0	0.50	190.000	TB 28 6 8	790.000	TB 29 0 2	275.000	234.399	297.500	190.000	385.000	2.084	541.995
MANGANESE	12	6	6	1	0	0.50	8.500	TB 28 6 8	42.000	TB 29 8 10	9.600	9.890	14.258	6.000	21.000	2.388	29.633
NICKEL	12	6	6	0	0	0.50	1.300	TB 28 6 8	6.500	TB 29 8 10	1.700	1.238	2.063	0.455	3.200	3.195	7.969 X
POTASSIUM	12	5	7	0	0	0.42	71.000	TB 29 6 8	270.000	TB 29 8 10	110.000	89.766	109.417	71.000	150.000	2.039	200.882
SODIUM	12	6	6	6	0	0.50	130.000	TB 29 8 10	230.000	TB 29 6 8	170.000	164.610	168.750	135.000	210.000	1.260	193.404
THALLIUM	12	2	10	2	0	0.17	0.400	TB 28 6 8	0.600	TB 28 8 10	0.275	0.234	0.262	0.160	0.350	1.618	0.358
VANADIUM	12	6	6	0	0	0.50	2.000	TB 28 6 8	42.000	TB 28 8 10	3.775	3.936	6.804	2.300	6.500	2.453	12.348
ZINC	12	6	6	0	0	0.50	23.000	TB 29 6 8D	150.000	TB 29 0 2	39.500	27.148	43.458	10.500	55.000	2.912	143.233
					TOTAL	====>	3041.260		12380.700								

EBASCO F-III
08/26/92

HOOKER CHEMICAL/RUCO POLYMER SITE
SUMMARY OF CHEMICAL COMPOUNDS (DETECTS ONLY)
SEDIMENT INSIDE & OUTSIDE SPILL AREA

COMPOUND	VALID	OCCUR	UN-DETECT	EST	REJECT	FREQ DETECT	MINIMUM DETECTED CONCENTRATION	SAMPLE ID	MAXIMUM DETECTED CONCENTRATION	SAMPLE ID	MEDIAN CONCENTRATION	GEOMETRIC MEAN	MEAN CONCENTRATION	LOWER QUARTILE	UPPER QUARTILE	STNDRD. DEV.	95% CI UPPER LIMIT
[] Pesticide/Polychlorinated Biphenyl (PEST/PCB) ug/Kg																	
(PCBs)																	
AROCLOR 1248	12	7	5	0	0	0.58	1400.000	TB 29 8 10	10000.000	TB 30 0 2	5400.000	3635.570	4571.429	2100.000	4350.000	2.098	12424.624 K
					TOTAL	=====>	1400.000		10000.000								

HOOKER CHEMICAL/RUCO POLYMER SITE

SUMMARY OF CHEMICAL COMPOUNDS (DETECTS + UNDETECTS/2)

SUBSURFACE SOIL INSIDE & OUTSIDE SPILL AREA

COMPOUND	VALID	OCCUR	UN-DETECT	EST	REJECT	FREQ DETECT	MINIMUM DETECTED CONCENTRATION	SAMPLE ID	MAXIMUM DETECTED CONCENTRATION	SAMPLE ID	MEDIAN CONCENTRATION	GEOMETRIC MEAN	MEAN CONCENTRATION	LOWER QUARTILE	UPPER QUARTILE	STNDRD. DEV.	95% CI UPPER LIMIT
[] Volatile (VOA) ug/Kg																	
(Halogenated Volatiles)																	
1,1,1-TRICHLOROETHANE	63	3	60	3	0	0.05	0.800	TB 10 3 5	2.000	TB 08 3 5D	1.000	1.202	1.862	1.000	1.000	1.897	1.740
1,1,2,2-TETRACHLOROETHANE	63	1	62	1	0	0.02	13.000	TB 10 3 5	13.000	TB 10 3 5	1.000	1.230	2.024	1.000	1.000	2.015	1.897
1,1-DICHLOROETHENE	63	2	61	2	0	0.03	3.000	TB 11 3 5	15.000	TB 05 9 11	1.000	1.200	1.929	1.000	1.000	1.942	1.774
BROMODICHLOROMETHANE	61	1	60	1	2	0.02	3.000	TB 08 3 5	3.000	TB 08 3 5	1.000	1.208	1.893	1.000	1.000	1.921	1.774
CARBON TETRACHLORIDE	63	14	49	14	0	0.22	0.600	R1 10 12	40.000	TB 21 14 16	1.000	1.370	3.140	1.000	1.000	2.590	2.848
CHLOROBENZENE	63	2	61	2	0	0.03	0.300	TB 25 3 5	11.000	TB 05 9 11	1.000	1.159	1.830	1.000	1.000	1.931	1.705
CHLOROFORM	52	7	45	7	11	0.13	1.000	Q1 10 12	24.000	TB 08 3 5	1.000	1.428	3.027	1.000	1.000	2.597	3.064
TETRACHLOROETHENE	58	36	22	36	5	0.62	0.300	TB 39 3 5	830.000	TB 05 9 11	2.500	4.169	42.990	1.000	11.000	7.003	68.897
TRANS-1,2-DICHLOROETHENE	61	7	54	7	2	0.11	2.000	TB 39 3 5	720.000	TB 18 10 12	1.000	1.521	15.311	1.000	1.000	3.245	4.499
TRICHLOROETHENE	63	18	45	17	0	0.29	0.400	TB 33 8 10	7600.000	TB 18 10 12	1.000	1.856	129.171	1.000	1.250	4.835	12.193
					TOTAL	====>	24.400		9258.000								
(Non-Halogenated Volatiles)																	
BENZENE	63	3	60	3	0	0.05	0.500	TB 10 3 5	1.000	TB 08 3 5D	1.000	1.163	1.822	1.000	1.000	1.902	1.688 X
CARBON DISULFIDE	60	1	59	0	3	0.02	7.000	TB 20 10 12	7.000	TB 20 10 12	1.000	1.230	1.975	1.000	1.000	1.986	1.864
ETHYLBENZENE	63	2	61	2	0	0.03	2.000	TB 08 3 5	2.000	TB 08 3 5D	1.000	1.252	2.008	1.000	1.000	1.996	1.899
STYRENE	62	2	60	2	1	0.03	0.500	TB 19 6 8	9.000	TB 18 10 12	1.000	1.199	1.806	1.000	1.000	1.924	1.761
TOLUENE	44	19	25	18	19	0.43	0.500	Q1 10 12	1400.000	TB 08 3 5D	1.000	5.255	122.487	1.000	26.000	11.630	593.360
TOTAL XYLENES	60	5	55	5	3	0.08	0.800	TB 22 10 12	28.000	TB 05 9 11	1.000	1.361	2.713	1.000	1.000	2.384	2.547
					TOTAL	====>	11.300		1447.000								

NOTE: (X), IN 95% CI COLUMN, INDICATES VALUE IS GREATER THAN MAXIMUM CONCENTRATION; (*), ASTERISKS, INDICATE THAT THE NUMBER OF OCCURRENCES IS TOO SMALL TO ALLOW CALCULATION

HOOKER CHEMICAL/RUCO POLYMER SITE
SUMMARY OF CHEMICAL COMPOUNDS (DETECTS + UNDETECTS/2)
SUBSURFACE SOIL INSIDE & OUTSIDE SPILL AREA

COMPOUND	VALID	OCCUR	UN-DETECT	EST	REJECT	FREQ DETECT	MINIMUM DETECTED CONCENTRATION	SAMPLE ID	MAXIMUM DETECTED CONCENTRATION	SAMPLE ID	MEDIAN CONCENTRATION	GEOMETRIC MEAN	MEAN CONCENTRATION	LOWER QUARTILE	UPPER QUARTILE	STNDRD. DEV.	95% CL UPPER LIMIT
[] Base Neutral Acid (BNA) ug/Kg																	
(Polycyclic Aromatic Hydrocarbons)																	
2-METHYLNAPHTHALENE	63	1	62	1	0	0.02	40.000	TB 22 10 12	40.000	TB 22 10 12	175.000	220.844	843.968	170.000	185.000	2.830	533.469 X
ACENAPHTHENE	63	1	62	1	0	0.02	110.000	TB 40 3 5	110.000	TB 40 3 5	175.000	227.347	846.984	170.000	185.000	2.760	530.816 X
ANTHRACENE	63	2	61	2	0	0.03	68.000	TB 05 9 11	110.000	TB 40 3 5	175.000	224.065	845.365	170.000	185.000	2.790	530.781 X
BENZO[a]ANTHRACENE	63	2	61	2	0	0.03	160.000	TB 05 9 11	330.000	TB 40 3 5	175.000	231.124	850.317	170.000	185.000	2.752	537.528 X
BENZO[a]PYRENE	63	2	61	2	0	0.03	140.000	TB 40 3 5	240.000	TB 20 10 12	175.000	229.164	848.333	170.000	185.000	2.753	533.146 X
BENZO[b]FLUORANTHENE	63	5	58	3	0	0.08	120.000	TB 16 3 5	450.000	TB 40 3 5	175.000	234.306	855.476	170.000	185.000	2.773	550.592 X
BENZO[k]FLUORANTHENE	63	1	62	1	0	0.02	330.000	TB 40 3 5	330.000	TB 40 3 5	175.000	231.347	850.476	170.000	185.000	2.751	537.811 X
CHRYSENE	63	6	57	6	0	0.10	70.000	TB 16 3 5	310.000	TB 20 10 12	175.000	228.743	850.159	170.000	185.000	2.789	541.812 X
FLUORANTHRENE	62	12	50	9	1	0.19	43.000	TB 12 3 5	670.000	TB 20 10 12	172.500	227.902	869.177	170.000	185.000	2.938	581.459
NAPHTHALENE	63	1	62	1	0	0.02	18.000	TB 22 10 12	18.000	TB 22 10 12	175.000	217.314	843.325	170.000	185.000	2.913	546.238 X
PHENANTHRENE	62	11	51	10	1	0.18	45.000	TB 12 3 5	590.000	TB 20 10 12	170.000	220.255	861.081	170.000	185.000	2.950	565.137
PYRENE	62	14	48	12	1	0.23	59.000	TB 12 3 5	600.000	TB 40 3 5	170.000	219.171	861.758	170.000	185.000	2.970	567.998
					TOTAL	====>	1203.000		3798.000								
(Phthalate Esters)																	
BENZOIC ACID	63	3	60	2	0	0.05	840.000	TB 35 3 5	7100.000	TB 19 6 8	850.000	1152.346	4238.730	800.000	900.000	2.828	2780.921
BIS[2-ETHYLHEXYL]PHTHALATE	16	13	3	6	47	0.81	480.000	TB 20 10 12	88000.000	M1 10 12	4500.000	3111.421	13705.625	750.000	9200.000	5.983	126880.874 X
DI-n-BUTYLPHTHALATE	35	3	32	2	28	0.09	1700.000	TB 23 12 14	3000.000	TB 05 9 11	170.000	274.363	969.714	170.000	185.000	3.219	940.633
DI-n-OCTYL PHTHALATE	62	1	61	0	1	0.02	1400.000	TB 05 9 11	1400.000	TB 05 9 11	175.000	250.331	955.081	170.000	185.000	3.042	671.266
DIMETHYL PHTHALATE	63	1	62	1	0	0.02	74.000	TB 22 10 12	74.000	TB 22 10 12	175.000	225.921	846.413	170.000	185.000	2.776	531.609 X
					TOTAL	====>	4494.000		99574.000								

HOOKER CHEMICAL/RUCO POLYMER SITE
SUMMARY OF CHEMICAL COMPOUNDS (DETECTS + UNDETECTS/2)
SUBSURFACE SOIL INSIDE & OUTSIDE SPILL AREA

COMPOUND	VALID	OCCUR	UN-DETECT	EST	REJECT	FREQ DETECT	MINIMUM DETECTED CONCENTRATION	SAMPLE ID	MAXIMUM DETECTED CONCENTRATION	SAMPLE ID	MEDIAN CONCENTRATION	GEOMETRIC MEAN	MEAN CONCENTRATION	LOWER QUARTILE	UPPER QUARTILE	STNDRD. DEV.	95% CI UPPER LIMIT
(Others)																	
N-NITROSODIPHENYLAMINE	63	1	62	1	0	0.02	71.000	TB 12 3 5	71.000	TB 12 3 5	175.000	225.773	846.365	170.000	185.000	2.778	531.792 X
					TOTAL	====>	71.000		71.000								
[] Pesticide/Polychlorinated Biphenyl (PEST/PCB) ug/Kg																	
(Pesticides)																	
4-4-DDD	62	1	61	0	0	0.02	350.000	TB 20 10 12	350.000	TB 20 10 12	17.000	20.832	92.790	16.000	18.000	2.391	38.959
4-4-DDE	62	1	61	0	0	0.02	43.000	TB 07 9 11	43.000	TB 07 9 11	17.000	20.139	87.839	16.000	18.000	2.221	34.355
4-4-DDT	62	3	59	2	0	0.05	24.000	TB 04 13 15	160.000	TB 20 10 12	17.000	20.830	89.992	16.000	18.000	2.305	37.379
ALPHA CHLORDANE	62	1	61	1	0	0.02	39.000	TB 20 10 12	39.000	TB 20 10 12	85.000	97.579	432.056	80.000	90.000	2.227	168.601 X
BETA-BHC	62	3	59	0	0	0.05	170.000	TB 06 9 11	230.000	TB 06 13 15	8.500	11.537	52.877	8.000	9.000	2.793	27.448
HEPTACHLOR EPOXIDE	62	1	61	1	0	0.02	12.000	TB 20 10 12	12.000	TB 20 10 12	8.500	9.936	43.336	8.000	9.000	2.209	16.852 X
					TOTAL	====>	638.000		834.000								
(PCBs)																	
AROCLOR 1248	62	14	48	0	0	0.23	440.000	PN J 10 12	24000.000	TB 22 10 12	85.000	190.116	1270.435	80.000	180.000	4.783	1228.536
AROCLOR 1254	62	4	58	0	0	0.06	490.000	TB 16 3 5	3900.000	TB 12 3 50	170.000	222.020	979.839	160.000	180.000	2.576	459.251
					TOTAL	====>	930.000		27900.000								
[] Inorganic (INORG) mg/Kg																	
ALUMINUM	61	53	8	18	0	0.87	600.000	R1 10 12	15000.000	TB 17 3 5	2700.000	2544.337	3621.803	1450.000	5050.000	2.364	4707.160
ANTIMONY	57	12	45	6	4	0.21	3.000	TB 16 3 5	9.000	TB 26 3 5	4.000	2.953	3.570	1.500	5.000	1.884	4.283

HOOKER CHEMICAL/RUCO POLYMER SITE
SUMMARY OF CHEMICAL COMPOUNDS (DETECTS + UNDETECTS/2)
SUBSURFACE SOIL INSIDE & OUTSIDE SPILL AREA

COMPOUND	VALID	OCCUR	UN-DETECT	EST	REJECT	FREQ DETECT	MINIMUM DETECTED CONCENTRATION	SAMPLE ID	MAXIMUM DETECTED CONCENTRATION	SAMPLE ID	MEDIAN CONCENTRATION	GEOMETRIC MEAN	MEAN CONCENTRATION	LOWER QUARTILE	UPPER QUARTILE	STNDRD. DEV.	95% CI UPPER LIMIT
ARSENIC	53	45	8	11	8	0.85	0.700	HP 10 12	19.000	TB 14 3 5	4.400	3.407	4.955	1.500	7.100	2.515	7.001
BARIUM	61	53	8	3	0	0.87	2.800	PH K 10 12	70.000	TB 24 3 5	8.600	9.689	13.949	5.500	21.500	2.387	18.123
BERYLLIUM	61	21	40	0	0	0.34	0.170	HP 10 12	0.700	TB 27 3 5	0.165	0.215	0.245	0.158	0.300	1.609	0.270
CADMIUM	59	20	39	16	2	0.34	0.190	O1 10 12	3.200	TB 18 10 12	0.220	0.209	0.375	0.080	0.355	2.781	0.498
CALCIUM	61	53	8	24	0	0.87	61.000	LP 10 12	19000.000	TB 20 10 12	630.000	656.077	1935.738	257.500	1700.000	4.257	3210.740
CHROMIUM	56	48	8	24	5	0.86	1.900	TB 06 13 15	120.000	M1 10 12D	7.350	7.820	15.421	3.000	16.000	3.103	22.016
COBALT	61	51	10	6	0	0.84	0.470	TB 07 13 15	11.000	TB 17 3 5	2.200	1.900	2.688	1.175	3.250	2.474	3.750
COPPER	61	53	8	24	0	0.87	1.800	TB 06 13 15	49.000	TB 13 3 5	6.700	5.694	8.669	2.800	9.950	2.514	11.457
IRON	61	53	8	7	0	0.87	2100.000	TB 06 13 15	20000.000	TB 17 3 5	5500.000	5234.503	6290.164	3950.000	7600.000	1.843	7402.219
LEAD	61	53	8	33	0	0.87	1.200	LP 10 12	45.000	TB 20 10 12	6.500	5.070	8.071	2.300	11.000	2.775	11.991
MAGNESIUM	61	53	8	17	0	0.87	84.000	TB 18 10 12	8400.000	TB 04 7 9	550.000	567.402	1214.328	235.000	1400.000	3.376	1783.798
MANGANESE	58	50	8	22	3	0.86	5.600	TB 18 10 12	370.000	PH I 10 12	63.000	50.041	73.538	22.500	90.000	2.519	101.688
MERCURY	61	3	58	1	0	0.05	0.110	TB 04 7 9D	0.160	TB 22 10 12	0.055	0.056	0.059	0.050	0.055	1.292	0.062
NICKEL	55	44	11	9	6	0.80	0.420	TB 32 4 6	33.000	TB 13 3 5	3.600	2.578	4.737	1.700	5.500	3.634	9.829
POTASSIUM	61	53	8	23	0	0.87	36.000	PH K 10 12	3501.000	TB 04 7 9	190.000	160.598	259.459	65.000	285.000	2.469	316.252
SELENIUM	61	3	58	3	0	0.05	0.400	TB 18 10 12	0.600	TB 17 3 5	0.165	0.245	0.405	0.155	0.193	2.367	0.454
SILVER	61	14	47	13	0	0.23	0.530	HP 10 12	2.300	TB 13 3 5	0.080	0.146	0.326	0.080	0.117	3.046	0.394
SODIUM	61	52	9	26	0	0.85	120.000	TB 16 3 5	490.000	TB 24 3 5	220.000	191.217	219.434	160.000	265.000	2.327	347.403
THALLIUM	61	1	60	1	0	0.02	0.500	PH I 10 12	0.500	PH I 10 12	0.160	0.164	0.167	0.155	0.168	1.184	0.173
VANADIUM	58	49	9	23	3	0.84	0.170	O1 10 12D	21.000	TB 14 3 5	4.700	3.730	6.198	1.700	10.000	3.289	11.382
ZINC	58	50	8	29	3	0.86	3.400	HP 10 12	250.000	TB 13 3 5	15.500	14.280	27.658	5.900	34.000	3.247	42.732
					TOTAL	====>	3024.360		67395.460								

HOOKER CHEMICAL/RUCO POLYMER SITE
SUMMARY OF CHEMICAL COMPOUNDS (DETECTS ONLY)
SUBSURFACE SOIL INSIDE & OUTSIDE SPILL AREA

HKR 001 1596

COMPOUND	VALID	OCCUR	UN-DETECT	EST	REJECT	FREQ DETECT	MINIMUM DETECTED CONCENTRATION	SAMPLE ID	MAXIMUM DETECTED CONCENTRATION	SAMPLE ID	MEDIAN CONCENTRATION	GEOMETRIC MEAN	MEAN CONCENTRATION	LOWER QUARTILE	UPPER QUARTILE	STNDRD. DEV.	95% CI UPPER LIMIT
1) Base Neutral Acid (BNA) ug/Kg																	
(Polycyclic Aromatic Hydrocarbons)																	
2-METHYLNAPHTHALENE	63	1	62	1	0	0.02	40.000	TB 22 10 12	40.000	TB 22 10 12	0.000	40.000	40.000	0.000	0.000	1.000	********** X
ACENAPHTHENE	63	1	62	1	0	0.02	110.000	TB 40 3 5	110.000	TB 40 3 5	0.000	110.000	110.000	0.000	0.000	1.000	********** X
ANTHRACENE	63	2	61	2	0	0.03	60.000	TB 05 9 11	110.000	TB 40 3 5	110.000	86.487	89.000	0.000	0.000	1.405	165.210 X
BENZO(a)ANTHRACENE	63	2	61	2	0	0.03	160.000	TB 05 9 11	330.000	TB 40 3 5	330.000	229.783	245.000	0.000	0.000	1.668	668.411 X
BENZO(a)PYRENE	63	2	61	2	0	0.03	140.000	TB 40 3 5	240.000	TB 20 10 12	240.000	183.303	190.000	0.000	0.000	1.464	381.559 X
BENZO(b)FLUORANTHENE	63	5	58	3	0	0.08	120.000	TB 16 3 5	450.000	TB 40 3 5	420.000	237.045	272.000	185.000	435.000	1.813	752.442 X
BENZO(k)FLUORANTHENE	63	1	62	1	0	0.02	330.000	TB 40 3 5	330.000	TB 40 3 5	0.000	330.000	330.000	0.000	0.000	1.000	********** X
CHRYSENE	63	6	57	6	0	0.10	70.000	TB 16 3 5	310.000	TB 20 10 12	200.000	176.728	201.667	120.000	300.000	1.816	507.478 X
FLUORANTHENE	62	12	50	9	1	0.19	43.000	TB 12 3 5	670.000	TB 20 10 12	155.000	168.295	229.917	120.000	360.000	2.241	453.834
NAPHTHALENE	63	1	62	1	0	0.02	18.000	TB 22 10 12	18.000	TB 22 10 12	0.000	18.000	18.000	0.000	0.000	1.000	********** X
PHENANTHRENE	62	11	51	10	1	0.18	45.000	TB 12 3 5	590.000	TB 20 10 12	120.000	139.094	190.182	91.000	120.000	2.181	367.874
PYRENE	62	14	48	12	1	0.23	59.000	TB 12 3 5	600.000	TB 40 3 5	140.000	145.487	195.143	79.000	240.000	2.083	321.342
					TOTAL	=====>	1203.000		3798.000								
(Phthalate Esters)																	
BENZOIC ACID	63	3	60	2	0	0.05	840.000	TB 35 3 5	7100.000	TB 19 6 8	7100.000	1979.218	3080.000	0.000	0.000	3.088	1687723057.31 X
BIS(2-ETHYLHEXYL)PHTHALATE	16	13	3	6	47	0.81	480.000	TB 20 10 12	88000.000	R1 10 12	4800.000	3703.961	15913.077	775.000	8300.000	5.837	219743.007 X
DI-n-BUTYLPHTHALATE	35	3	32	2	28	0.09	1700.000	TB 23 12 14	3000.000	TB 05 9 11	3000.000	2168.703	2233.333	0.000	0.000	1.340	5295.418 X
DI-n-OCTYL PHTHALATE	62	1	61	0	1	0.02	1400.000	TB 05 9 11	1400.000	TB 05 9 11	0.000	1400.000	1400.000	0.000	0.000	1.000	********** X
DIMETHYL PHTHALATE	63	1	62	1	0	0.02	74.000	TB 22 10 12	74.000	TB 22 10 12	0.000	74.000	74.000	0.000	0.000	1.000	********** X
					TOTAL	=====>	4494.000		99574.000								

NOTE: (X), IN 95% CI COLUMN, INDICATES VALUE IS GREATER THAN MAXIMUM CONCEN (*), ASTERISKS, INDICATE THAT THE NUMBER OF OCCURRENCES IS TOO SMALL TO ALLOW CALCULATION

HOOKER CHEMICAL/RICO POLYMER SITE
SUMMARY OF CHEMICAL COMPOUNDS (DETECTS ONLY)
SUBSURFACE SOIL INSIDE & OUTSIDE SPILL AREA

COMPOUND	VALID	OCCUR	UN-DETECT	EST	REJECT	FREQ DETECT	MINIMUM DETECTED CONCENTRATION	SAMPLE ID	MAXIMUM DETECTED CONCENTRATION	SAMPLE ID	MEDIAN CONCENTRATION	GEOMETRIC MEAN	MEAN CONCENTRATION	LOWER QUARTILE	UPPER QUARTILE	STNDRD. DEV.	95% CI UPPER LIMIT	
(Others)																		
N-NITROSODIPHENYLAMINE	63	1	62	1	0	0.02	71.000	TB 12 3 5	71.000	TB 12 3 5	0.000	71.000	71.000	0.000	0.000	1.000	**********	X
					TOTAL	====>	71.000		71.000									
I) Pesticide/Polychlorinated Biphenyl (PEST/PCB) ug/Kg																		
(Pesticides)																		
4-4-DDD	62	1	61	0	0	0.02	350.000	TB 20 10 12	350.000	TB 20 10 12	0.000	350.000	350.000	0.000	0.000	1.000	**********	X
4-4-DDE	62	1	61	0	0	0.02	43.000	TB 07 9 11	43.000	TB 07 9 11	0.000	43.000	43.000	0.000	0.000	1.000	**********	X
4-4-DDT	62	3	59	2	0	0.05	24.000	TB 04 13 15	160.000	TB 20 10 12	160.000	46.978	70.333	0.000	0.000	2.895	17687405.746	X
ALPHA CHLORDANE	62	1	61	1	0	0.02	39.000	TB 20 10 12	39.000	TB 20 10 12	0.000	39.000	39.000	0.000	0.000	1.000	**********	X
BETA-BHC	62	3	59	0	0	0.05	170.000	TB 06 9 11	230.000	TB 06 13 15	230.000	204.896	206.667	0.000	0.000	1.177	303.714	X
HEPTACHLOR EPOXIDE	62	1	61	1	0	0.02	12.000	TB 20 10 12	12.000	TB 20 10 12	0.000	12.000	12.000	0.000	0.000	1.000	**********	X
					TOTAL	====>	638.000		834.000									
(PCBs)																		
AROCLOR 1248	62	14	48	0	0	0.23	440.000	PH J 10 12	24000.000	TB 22 10 12	2100.000	2538.048	5272.143	840.000	10000.000	3.580	22702.185	
AROCLOR 1254	62	4	58	0	0	0.06	490.000	TB 16 3 5	3900.000	TB 12 3 50	3150.000	1384.014	1897.500	800.000	3900.000	2.607	2993544.709	X
					TOTAL	====>	930.000		27900.000									

HOOKER CHEMICAL/RUCO POLYMER SITE
SUMMARY OF CHEMICAL COMPOUNDS (DETECTS + UNDETECTS/2)
GROUNDWATER

COMPOUND	VALID	OCCUR	UN-DETECT	EST	REJECT	REQ DETECT	MINIMUM DETECTED CONCENTRATION	SAMPLE ID	MAXIMUM DETECTED CONCENTRATION	SAMPLE ID	MEDIAN CONCENTRATION	GEOMETRIC MEAN	MEAN CONCENTRATION	LOWER QUARTILE	UPPER QUARTILE	STNDRD. DEV.	95% CI UPPER LIMIT
[] Low Detection Limit Volatile (LDL VOA) ug/L																	
(Halogenated Volatiles)																	
Chlorobenzene	36	3	33	0	0	0.08	2.000	E1	6.000	P1	0.020	0.027	0.241	0.020	0.020	3.335	0.100
Chloromethane	36	3	33	1	0	0.08	9.000	N 1059 3	10.000	N1 D	0.065	0.086	0.589	0.065	0.065	3.183	0.290
Tetrachloroethene	34	14	20	6	2	0.41	0.800	S2	98.000	D1	0.070	0.507	11.979	0.070	5.000	15.382	275.570 X
trans-1,2-Dichloroethene	36	16	20	13	0	0.44	1.000	B2	54.000	D1	0.050	0.358	4.863	0.050	3.000	12.117	55.590 X
Trichloroehtene	36	11	25	1	0	0.31	2.000	C2	18.000	D1	0.095	0.297	2.096	0.095	2.000	6.694	6.150
Vinyl Chloride	36	8	28	3	0	0.22	7.000	D2	560.000	N 1059 3	0.085	0.278	22.180	0.085	0.085	12.565	68.530
					TOTAL	====>	21.800		746.000								
(Non-Halogenated Volatiles)																	
2-Butanone	36	2	34	1	0	0.06	3.000	J2	3.000	J2	5.000	4.930	4.944	5.000	5.000	1.089	5.070 X
4-Methyl-2-Pentanone	36	4	32	2	0	0.11	11.000	J1	320.000	P1	5.000	5.953	14.306	5.000	5.000	2.073	10.190
Acetone	35	35	0	0	1	1.00	10.000	A1	10.000	S2	10.000	10.000	10.000	10.000	10.000	1.000	10.000
Benzene	36	2	34	0	0	0.06	10.000	N 1059 3	10.000	N 1059 3	0.020	0.024	0.297	0.020	0.020	2.817	0.070
Carbon Disulfide	33	6	27	4	3	0.18	1.000	D2	4.000	F1	2.500	2.367	2.455	2.500	2.500	1.349	2.720
Ethylbenzene	36	4	32	1	0	0.11	3.000	E1	8.000	P1	0.030	0.046	0.528	0.030	0.030	4.337	0.290
Xylene (total)	36	7	29	3	0	0.19	1.000	F1	15.000	P1	0.050	0.100	0.903	0.050	0.050	5.088	0.970
					TOTAL	====>	39.000		370.000								

NOTE: (X), IN 95% CI COLUMN, INDICATES VALUE IS GREATER THAN MAXIMUM CONCENTRATION; (*), ASTERISKS, INDICATE THAT THE NUMBER OF OCCURRENCES IS TOO SMALL TO ALLOW CALCULATION

EBASCO F-III
06/03/92

HOOKER CHEMICAL/RUCO POLYMER SITE
SUMMARY OF CHEMICAL COMPOUNDS (DETECTS + UNDETECTS/2)
GROUNDWATER

COMPOUND	VALID	OCCUR	UN-DETECT	EST	REJECT	FREQ DETECT	MINIMUM DETECTED CONCENTRATION	SAMPLE ID	MAXIMUM DETECTED CONCENTRATION	SAMPLE ID	MEDIAN CONCENTRATION	GEOMETRIC MEAN	MEAN CONCENTRATION	LOWER QUARTILE	UPPER QUARTILE	STNDRD. DEV.	95% CI UPPER LIMIT
[] Base Neutral Acid (BNA) ug/L																	
(Polycyclic Aromatic Hydrocarbons)																	
NAPHTHALENE	34	1	33	1	0	0.03	2.000	E1	2.000	E1	5.000	4.867	4.912	5.000	5.000	1.170	5.168 X
					TOTAL	=====>	2.000		2.000								
(Phthalate Esters)																	
BIS(2-ETHYLHEXYL)PHTHALATE	29	16	13	16	5	0.55	1.000	H1 D	6.000	I2	5.000	3.557	3.897	2.000	5.000	1.603	4.747
DI-n-BUTYLPHTHALATE	34	1	33	0	0	0.03	45.000	P1	45.000	P1	5.000	5.334	6.176	5.000	5.000	1.458	6.468
DI-n-OCTYL PHTHALATE	34	1	33	1	0	0.03	2.000	D1	2.000	D1	5.000	4.867	4.912	5.000	5.000	1.170	5.168 X
					TOTAL	=====>	48.000		53.000								
[] Pesticide/Polychlorinated Biphenyl (PEST/PCB) ug/L																	
(Pesticides)																	
DIELDRIN	35	1	34	1	0	0.03	0.004	G2	0.004	G2	0.050	0.050	0.062	0.050	0.050	1.799	0.073 X
HEPTACHLOR EPOXIDE	35	2	33	2	0	0.06	0.003	G2	0.015	L1	0.025	0.025	0.031	0.025	0.025	1.724	0.035 X
						=====>	0.007		0.019								
[] Inorganic (INORG) ug/L																	
ALUMINUM	31	31	0	20	4	1.00	12.000	A2	1200.000	S2	230.000	198.558	345.194	160.000	380.000	3.446	791.917
ANTIMONY	35	3	32	1	0	0.09	22.000	F1	66.000	F2	17.000	15.363	17.286	10.000	17.000	1.543	19.478
ARSENIC	35	13	22	7	0	0.37	2.000	I2	68.000	J1	1.000	2.999	11.314	1.000	8.000	4.882	26.844

NOTE: (X), IN 95% CI COLUMN, INDICATES VALUE IS GREATER THAN MAXIMUM CONCENTRATION; (*), ASTERISKS, INDICATE THAT THE NUMBER OF OCCURRENCES IS TOO SMALL TO ALLOW CALCULATION

EBASCO F-111
06/03/92

HOOKER CHEMICAL/RUCO POLYMER SITE
SUMMARY OF CHEMICAL COMPOUNDS (DETECTS + UNDETECTS/2)
GROUNDWATER

COMPOUND	VALID	OCCUR	UN-DETECT	EST	REJECT	FREQ DETECT	MINIMUM DETECTED CONCENTRATION	SAMPLE ID	MAXIMUM DETECTED CONCENTRATION	SAMPLE ID	MEDIAN CONCENTRATION	GEOMETRIC MEAN	MEAN CONCENTRATION	LOWER QUARTILE	UPPER QUARTILE	STNDRD. DEV.	95% CI UPPER LIMIT
BARIUM	35	35	0	2	0	1.00	8.000	S2	140.000	I1 D	39.000	36.233	51.314	19.000	74.000	2.402	75.258
BERYLLIUM	35	8	27	0	0	0.23	0.210	G2	2.000	A1	1.000	0.611	0.799	0.585	1.000	2.480	1.346
CADMIUM	35	14	21	1	0	0.40	1.000	D2	130.000	C1	1.000	1.329	5.129	1.000	1.500	2.789	3.640
CALCIUM	35	35	0	29	0	1.00	2400.000	A2	150000.000	S1 D	15000.000	14381.603	23140.000	8650.000	21000.000	2.465	31423.703
CHROMIUM	30	17	13	2	5	0.57	1.000	F1	160.000	D1	2.000	1.788	8.383	0.500	4.000	4.066	11.326
COBALT	35	19	16	1	0	0.54	2.000	E1	49.000	I1	3.000	3.025	7.143	1.500	6.000	3.631	13.720
COPPER	33	17	16	2	2	0.52	0.340	F2	16.000	A1	2.000	1.123	3.230	0.150	4.300	5.253	12.181
IRON	34	34	0	26	1	1.00	49.000	H1 D	84000.000	F1	3900.000	2206.835	15496.971	370.000	23000.000	11.469	303657.356 X
LEAD	31	13	18	13	4	0.42	2.000	D2	44.000	N 1059 3	1.000	1.790	3.290	1.000	3.000	2.300	3.596
MAGNESIUM	35	35	0	4	0	1.00	360.000	S1 D	6400.000	G1	2600.000	1977.031	2457.429	1250.000	3150.000	2.076	3401.812
MANGANESE	33	33	0	25	2	1.00	4.000	B1	1700.000	N 1059 3	120.000	88.625	276.121	23.000	460.000	5.990	1469.572
MERCURY	35	1	34	0	0	0.03	0.200	B1	0.200	B1	0.100	0.102	0.103	0.100	0.100	1.124	0.106
NICKEL	22	7	15	1	13	0.32	3.000	D1	150.000	H2	3.000	4.079	11.318	3.000	7.000	2.999	15.020
POTASSIUM	34	34	0	5	1	1.00	660.000	A2	22000.000	S2	1600.000	2074.450	3169.706	1100.000	3600.000	2.294	4089.514
SELENIUM	35	1	34	1	0	0.03	4.000	L1	4.000	L1	1.000	1.354	2.114	1.000	1.000	2.150	2.422
SILVER	33	7	26	6	2	0.21	1.000	D1	6.000	A1	1.000	0.954	1.182	0.500	1.000	1.812	1.406
SODIUM	35	35	0	30	0	1.00	1200.000	K1	54000.000	A1	17000.000	11648.655	15551.429	6200.000	20500.000	2.338	23383.772
VANADIUM	28	6	22	2	7	0.21	4.000	H1 D	16.000	S2	2.000	1.720	2.679	0.500	2.000	2.567	4.270
ZINC	22	11	11	6	13	0.50	3.000	K1	100.000	L1	4.000	5.209	13.273	3.000	10.000	3.663	30.911
					TOTAL	====>	4738.750		320251.200								

HKR 001 1600

EBASCO F-111
08/25/92

HOOKER CHEMICAL/RUCO POLYMER SITE
SUMMARY OF CHEMICAL COMPOUNDS (DETECTS ONLY)
GROUNDWATER

COMPOUND	VALID	OCCUR	UN-DETECT	EST	REJECT	FREQ DETECT	MINIMUM DETECTED CONCENTRATION	SAMPLE ID	MAXIMUM DETECTED CONCENTRATION	SAMPLE ID	MEDIAN CONCENTRATION	GEOMETRIC MEAN	MEAN CONCENTRATION	LOWER QUARTILE	UPPER QUARTILE	STNDRD. DEV.	95% CI UPPER LIMIT
[] Base Neutral Acid (BNA) ug/L																	
(Polycyclic Aromatic Hydrocarbons)																	
NAPHTHALENE	34	1	33	1	0	0.03	2.000	E1	2.000	E1	0.000	2.000	2.000	0.000	0.000	1.000	********** X
					TOTAL	=====>	2.000		2.000								
(Phthalate Esters)																	
BIS(2-ETHYLHEXYL)PHTHALATE	29	16	13	16	5	0.55	1.000	H1 D	6.000	I2	3.000	2.698	3.000	2.000	4.000	1.621	3.922
DI-n-BUTYLPHTHALATE	34	1	33	0	0	0.03	45.000	P1	45.000	P1	0.000	45.000	45.000	0.000	0.000	1.000	********** X
DI-n-OCTYL PHTHALATE	34	1	33	1	0	0.03	2.000	D1	2.000	D1	0.000	2.000	2.000	0.000	0.000	1.000	********** X
					TOTAL	=====>	48.000		53.000								
[] Pesticide/Polychlorinated Biphenyl (PEST/PCB) ug/L																	
(Pesticides)																	
DIELDRIN	35	1	34	1	0	0.03	0.004	G2	0.004	G2	0.000	0.004	0.004	0.000	0.000	1.000	********** X
HEPTACHLOR EPOXIDE	35	2	33	2	0	0.06	0.003	G2	0.015	L1	0.015	0.007	0.009	0.000	0.000	3.121	0.158 X
					TOTAL	=====>	0.007		0.019								

HKR 001 1601

NOTE: (X) IN 95% CI COLUMN INDICATES VALUE IS GREATER THAN MAXIMUM CONCENTRATION. (*) ASTERISKS INDICATE THAT THE NUMBER OF OCCURRENCES IS TOO SMALL TO ALLOW CALCULATION

HOOKER CHEMICAL/RUCO POLYMER SITE

SUMMARY OF CHEMICAL COMPOUNDS (DETECTS + UNDETECTS/2)

SURFACE WATER

COMPOUND	VALID	OCCUR	UN-DETECT	EST	REJECT	FREQ DETECT	MINIMUM DETECTED CONCENTRATION	SAMPLE ID	MAXIMUM DETECTED CONCENTRATION	SAMPLE ID	MEDIAN CONCENTRATION	GEOMETRIC MEAN	MEAN CONCENTRATION	LOWER QUARTILE	UPPER QUARTILE	STNDRD. DEV.	95% CI UPPER LIMIT
[] Base Neutral Acid (BNA) ug/L																	
(Phthalate Esters)																	
BIS(2-ETHYLHEXYL)PHTHALATE	2	2	0	1	1	1.00	3.000	SW 1	31.000	SW 3	31.000	9.644	17.000	0.000	0.000	5.214	3327.351 X
					TOTAL	====>	3.000		31.000								
[] Pesticide/Polychlorinated Biphenyl (PEST/PCB) ug/L																	
(PCBs)																	
AROCLOR 1248	3	1	2	0	0	0.33	1.500	SW 1	1.500	SW 1	1.500	0.098	0.517	0.000	0.000	10.632	********** X
					TOTAL	====>	1.500		1.500								
[] Inorganic (INORG) ug/L																	
ALUMINUM	3	3	0	3	0	1.00	3000.000	SW 2	9900.000	SW 3	9900.000	5595.894	6266.667	0.000	0.000	1.820	182439.062 X
ARSENIC	3	3	0	3	0	1.00	4.000	SW 2	15.000	SW 3	15.000	9.205	10.667	0.000	0.000	2.065	2520.793 X
BARIUM	3	3	0	0	0	1.00	19.000	SW 2	140.000	SW 3	140.000	43.526	63.333	0.000	0.000	2.832	12423401.450 X
BERYLLIUM	3	3	0	0	0	1.00	0.320	SW 2	0.960	SW 3	0.960	0.610	0.673	0.000	0.000	1.776	17.119 X
CADMIUM	3	3	0	2	0	1.00	3.000	SW 2	7.000	SW 3	7.000	4.718	5.000	0.000	0.000	1.532	36.660 X
CALCIUM	3	3	0	3	0	1.00	6700.000	SW 2	22000.000	SW 3	22000.000	10520.625	12200.000	0.000	0.000	1.904	824583.455 X
CHROMIUM	3	3	0	2	0	1.00	8.000	SW 1	34.000	SW 3	34.000	18.155	21.333	0.000	0.000	2.101	5706.337 X
COBALT	3	1	2	0	0	0.33	4.000	SW 3	4.000	SW 3	4.000	2.080	2.333	0.000	0.000	1.762	55.636 X
COPPER	3	3	0	3	0	1.00	39.000	SW 1	95.000	SW 3	95.000	61.243	65.333	0.000	0.000	1.561	522.715 X
IRON	3	3	0	3	0	1.00	3000.000	SW 2	14000.000	SW 3	14000.000	6385.776	7733.333	0.000	0.000	2.161	2526617.147 X
LEAD	3	3	0	3	0	1.00	21.000	SW 2	270.000	SW 3	270.000	55.407	107.000	0.000	0.000	3.987	30458702185.7 X
MAGNESIUM	3	3	0	1	0	1.00	2300.000	SW 2	9300.000	SW 3	9300.000	3865.374	4766.667	0.000	0.000	2.148	1455282.047 X

NOTE: (X), IN 95% CI COLUMN, INDICATES VALUE IS GREATER THAN MAXIMUM CONCENTRATION; (*), ASTERISKS, INDICATE THAT THE NUMBER OF OCCURRENCES IS TOO SMALL TO ALLOW CALCULATION

HOOKER CHEMICAL/RUCO POLYMER SITE
SUMMARY OF CHEMICAL COMPOUNDS (DETECTS + UNDETECTS/2)
SURFACE WATER

COMPOUND	VALID	OCCUR	UN-DETECT	EST	REJECT	FREQ DETECT	MINIMUM DETECTED CONCENTRATION	SAMPLE ID	MAXIMUM DETECTED CONCENTRATION	SAMPLE ID	MEDIAN CONCENTRATION	GEOMETRIC MEAN	MEAN CONCENTRATION	LOWER QUARTILE	UPPER QUARTILE	STNDRD. DEV.	95% CI UPPER LIMIT
MANGANESE	3	3	0	3	0	1.00	41.000	SW 2	200.000	SW 3	200.000	87.250	107.333	0.000	0.000	2.214	42103.137 X
MERCURY	3	1	2	0	0	0.33	0.240	SW 3	0.240	SW 3	0.240	0.134	0.147	0.000	0.000	1.658	2.478 X
NICKEL	3	3	0	0	0	1.00	14.000	SW 2	25.000	SW 3	25.000	18.805	19.333	0.000	0.000	1.336	45.555 X
POTASSIUM	3	3	0	0	0	1.00	740.000	SW 1	2300.000	SW 3	2300.000	1165.416	1323.333	0.000	0.000	1.822	38233.052 X
SILVER	3	2	1	2	0	0.67	2.000	SW 1	2.000	SW 2	2.000	1.587	1.667	0.000	0.000	1.492	10.806 X
SODIUM	3	3	0	3	0	1.00	5600.000	SW 3	13000.000	SW 2	13000.000	7670.806	8266.667	0.000	0.000	1.584	70401.764 X
VANADIUM	3	3	0	0	0	1.00	9.000	SW 2	33.000	SW 3	33.000	14.374	17.333	0.000	0.000	2.058	3820.364 X
ZINC	3	3	0	0	0	1.00	200.000	SW 1	480.000	SW 3	480.000	267.773	293.333	0.000	0.000	1.658	4955.088 X
					TOTAL	====>	21704.560		71806.200								

EBASCO F-111
08/25/92

HOOKER CHEMICAL/RUCO POLYMER SITE
SUMMARY OF CHEMICAL COMPOUNDS (DETECTS ONLY)
SURFACE WATER

COMPOUND	VALID	OCCUR	UN-DETECT	EST	REJECT	FREQ DETECT	MINIMUM DETECTED CONCENTRATION	SAMPLE ID	MAXIMUM DETECTED CONCENTRATION	SAMPLE ID	MEDIAN CONCENTRATION	GEOMETRIC MEAN	MEAN CONCENTRATION	LOWER QUARTILE	UPPER QUARTILE	STNDRD. DEV.	95% CI UPPER LIMIT
I) Base Neutral Acid (BNA) ug/L																	
(Phthalate Esters)																	
BIS(2-ETHYLHEXYL)PHTHALATE	2	2	0	1	1	1.00	3.000	SW 1	31.000	SW 3	31.000	9.644	17.000	0.000	0.000	5.214	3327.351 X
					TOTAL	====>	3.000		31.000								
I) Pesticide/Polychlorinated Biphenyl (PEST/PCB) ug/L																	
(PCBs)																	
AROCLOR 1248	3	1	2	0	0	0.33	1.500	SW 1	1.500	SW 1	0.000	1.500	1.500	0.000	0.000	1.000	********** X
					TOTAL	====>	1.500		1.500								

HKR 001 1604

NOTE: (X), IN 95% CI COLUMN, INDICATES VALUE IS GREATER THAN MAXIMUM CONCENTI . *), ASTERISKS, INDICATE THAT THE NUMBER OF OCCURRENCES IS TOO SMALL TO ALLOW CALCULATION

HOOKER CHEMICAL/RUCO POLYMER SITE
SUMMARY OF CHEMICAL COMPOUNDS (DETECTS + UNDETECTS/2)
SURFACE SOIL INSIDE & OUTSIDE SPILL AREA

COMPOUND	VALID	OCCUR	UN-DETECT	EST	REJECT	FREQ DETECT	MINIMUM DETECTED CONCENTRATION	SAMPLE ID	MAXIMUM DETECTED CONCENTRATION	SAMPLE ID	MEDIAN CONCENTRATION	GEOMETRIC MEAN	MEAN CONCENTRATION	LOWER QUARTILE	UPPER QUARTILE	STNDRD. DEV.	95% CI UPPER LIMIT
I) Volatile (VOA) ug/Kg																	
(Halogenated Volatiles)																	
1,1,1-TRICHLOROETHANE	42	2	40	2	0	0.05	0.300	PH J 0 2	2.000	TB 10 0 2	1.000	1.023	1.090	1.000	1.000	1.408	1.198
1,1-DICHLOROETHENE	42	1	41	1	0	0.02	8.000	TB 11 0 2	8.000	TB 11 0 2	1.000	1.074	1.202	1.000	1.000	1.415	1.262
CARBON TETRACHLORIDE	41	4	37	4	1	0.10	1.000	TB 17 1 3	680.000	HP 0 2	1.000	1.276	17.951	1.000	1.000	3.000	3.752
CHLOROBENZENE	42	3	39	3	0	0.07	0.400	PH J 0 2	0.500	TB 27 0 2	1.000	0.997	1.057	1.000	1.000	1.378	1.151 x
CHLOROFORM	33	8	25	8	9	0.24	0.900	M1 0 2	9.000	TB 10 0 2	1.000	1.162	1.505	1.000	1.000	1.826	1.742
TETRACHLOROETHENE	37	21	16	21	5	0.57	0.300	Q1 0 2	710.000	TB 10 0 2	2.000	3.289	37.149	1.000	5.250	6.261	56.741
TRANS-1,2-DICHLOROETHENE	40	7	33	7	2	0.17	1.000	TB 39 0 20	11.000	M1 0 2	1.000	1.448	2.250	1.000	1.000	2.202	2.611
TRICHLOROETHENE	42	16	26	16	0	0.38	0.400	PH J 0 2	720.000	M1 0 2	1.000	1.501	19.035	1.000	2.000	3.473	5.548
					TOTAL	====>	12.300		2140.500								
(Non-Halogenated Volatiles)																	
BENZENE	42	2	40	2	0	0.05	1.000	TB 01 0 2	1.000	TB 10 0 2	1.000	1.053	1.095	1.000	1.000	1.267	1.157 x
ETHYLBENZENE	42	2	40	2	0	0.05	2.000	TB 10 0 2	39.000	TB 01 0 2	1.000	1.168	2.024	1.000	1.000	1.842	1.720
STYRENE	41	1	40	1	1	0.02	0.400	TB 27 0 2	0.400	TB 27 0 2	1.000	1.014	1.071	1.000	1.000	1.357	1.161 x
TOLUENE	23	11	12	11	19	0.48	0.500	PH J 0 2	1800.000	TB 10 0 2	1.000	3.469	138.161	1.000	1.500	11.637	971.028
TOTAL XYLENES	38	6	32	6	4	0.16	0.300	Q1 0 2	310.000	TB 01 0 2	1.000	1.293	9.532	1.000	1.000	2.862	3.609
					TOTAL	====>	4.200		2150.400								
II) Base Neutral Acid (BNA) ug/Kg																	
(Phenols)																	
4-METHYLPHENOL	41	1	40	1	0	0.02	220.000	TB 01 0 2	220.000	TB 01 0 2	185.000	251.454	1002.073	180.000	195.000	2.958	724.004 x

NOTE: (X), IN 95% CI COLUMN, INDICATES VALUE IS GREATER THAN MAXIMUM CONCENTRATION; (*), ASTERISKS, INDICATE THAT THE NUMBER OF OCCURRENCES IS TOO SMALL TO ALLOW CALCULATION

HOOKER CHEMICAL/RUCO POLYMER SITE
SUMMARY OF CHEMICAL COMPOUNDS (DETECTS + UNDETECTS/2)
SURFACE SOIL INSIDE & OUTSIDE SPILL AREA

COMPOUND	VALID	OCCUR	UN-DETECT	EST	REJECT	FREQ DETECT	MINIMUM DETECTED CONCENTRATION	SAMPLE ID	MAXIMUM DETECTED CONCENTRATION	SAMPLE ID	MEDIAN CONCENTRATION	GEOMETRIC MEAN	MEAN CONCENTRATION	LOWER QUARTILE	UPPER QUARTILE	STNDRD. DEV.	95% CI UPPER LIMIT
PHENOL	41	1	40	1	0	0.02	290.000	TB 14 1 3	290.000	TB 14 1 3	185.000	229.160	728.049	180.000	195.000	2.452	475.351 X
					TOTAL	====>	510.000		510.000								
(Polycyclic Aromatic Hydrocarbons)																	
2-METHYLNAPHTHALENE	41	1	40	1	0	0.02	390.000	TB 01 0 2	390.000	TB 01 0 2	185.000	254.990	1006.220	180.000	195.000	2.964	736.329 X
ACENAPHTHENE	41	1	40	1	0	0.02	210.000	TB 40 0 2	210.000	TB 40 0 2	185.000	227.672	726.341	180.000	195.000	2.449	471.628 X
ANTHRACENE	41	3	38	3	0	0.07	60.000	R1 0 2	230.000	TB 40 0 2	185.000	243.909	998.537	180.000	195.000	3.027	727.527 X
BENZO[a]ANTHRACENE	41	9	32	7	0	0.22	85.000	TB 20 0 2	810.000	TB 40 0 2	190.000	268.543	1033.902	180.000	200.000	3.092	827.541 X
BENZO[a]PYRENE	41	3	38	1	0	0.07	270.000	TB 40 0 2	410.000	PH K 0 2	190.000	263.239	1014.390	180.000	200.000	2.961	758.871 X
BENZO[b]FLUORANTHENE	41	9	32	5	0	0.22	100.000	TB 20 0 2	1900.000	TB 40 0 2	190.000	292.168	1085.854	180.000	200.000	3.209	954.938
BENZO[G,H,I]PERYLENE	41	3	38	1	0	0.07	240.000	TB 25 0 2	500.000	TB 01 0 2	190.000	263.063	1015.610	180.000	200.000	2.973	763.269 X
BENZO[k]FLUORANTHENE	41	3	38	2	0	0.07	140.000	TB 40 0 2	630.000	TB 01 0 2	185.000	259.250	1013.659	180.000	197.500	2.990	758.816 X
CHRYSENE	41	11	30	7	0	0.27	95.000	TB 20 0 2	1400.000	TB 01 0 2	185.000	278.632	1061.341	180.000	200.000	3.189	901.540
DIBENZOFURAN	41	1	40	1	0	0.02	250.000	TB 01 0 2	250.000	TB 01 0 2	185.000	252.239	1002.805	180.000	195.000	2.958	726.034 X
FLUORANTHRENE	41	17	24	11	0	0.41	70.000	TB 27 0 2	2400.000	TB 01 0 2	190.000	293.176	1123.488	175.000	285.000	3.459	1083.590
FLUORENE	41	2	39	2	0	0.05	100.000	TB 40 0 2	320.000	TB 01 0 2	185.000	250.323	1002.683	180.000	195.000	2.984	730.356 X
INDENO[1,2,3-CD]PYRENE	41	4	37	2	0	0.10	130.000	TB 40 0 2	790.000	TB 25 0 2	190.000	265.972	1024.024	180.000	200.000	3.016	788.817
NAPHTHALENE	41	1	40	1	0	0.02	270.000	TB 01 0 2	270.000	TB 01 0 2	185.000	252.713	1003.293	180.000	195.000	2.958	727.454 X
PHENANTHRENE	41	13	28	11	0	0.32	32.000	R1 0 2D	1200.000	TB 01 0 2	185.000	231.811	1031.488	172.500	197.500	3.540	953.113
PYRENE	41	17	24	14	0	0.41	73.000	TB 12 0 2	1600.000	TB 40 0 2	190.000	270.319	1074.024	172.500	215.000	3.359	951.519
					TOTAL	====>	2515.000		13310.000								
(Benzenes)																	
HEXACHLOROBENZENE	41	2	39	1	0	0.05	270.000	TB 20 0 2	580.000	TB 21 0 2	190.000	261.035	1013.780	182.500	200.000	2.973	757.218 X
					TOTAL	====>	270.000		580.000								

HOOKER CHEMICAL/RUCO POLYMER SITE
SUMMARY OF CHEMICAL COMPOUNDS (DETECTS + UNDETECTS/2)
SURFACE SOIL INSIDE & OUTSIDE SPILL AREA

COMPOUND	VALID	OCCUR	UN-DETECT	EST	REJECT	FREQ DETECT	MINIMUM DETECTED CONCENTRATION	SAMPLE ID	MAXIMUM DETECTED CONCENTRATION	SAMPLE ID	MEDIAN CONCENTRATION	GEOMETRIC MEAN	MEAN CONCENTRATION	LOWER QUARTILE	UPPER QUARTILE	STNDRD. DEV.	95% CI UPPER LIMIT
(Phthalate Esters)																	
BIS[2-ETHYLHEXYL]PHTHALATE	12	9	3	4	29	0.75	500.000	TB 20 0 2	34000.000	TB 01 0 2	4100.000	2848.984	8164.583	780.000	16000.000	5.459	115617.320 X
BUTYL BENZYL PHTHALATE	41	1	40	0	0	0.02	800.000	TB 01 0 2	800.000	TB 01 0 2	185.000	259.498	1016.220	180.000	195.000	3.002	764.057
DI-n-BUTYLPHTHALATE	25	1	24	0	16	0.04	7200.000	TB 01 0 2	7200.000	TB 01 0 2	190.000	348.666	1802.400	177.500	197.500	4.495	3376.859
DI-n-OCTYL PHTHALATE	41	1	40	0	0	0.02	4200.000	TB 01 0 2	4200.000	TB 01 0 2	185.000	263.377	924.756	180.000	195.000	2.992	771.564
					TOTAL	====>	12700.000		46200.000								
[] Pesticide/Polychlorinated Biphenyl (PEST/PCB) ug/Kg																	
(Pesticides)																	
4-4-DDD	42	1	41	0	0	0.02	1400.000	TB 20 0 2	1400.000	TB 20 0 2	18.250	27.596	279.452	17.000	19.500	3.575	114.570
4-4-DDT	41	1	40	0	1	0.02	1900.000	TB 20 0 2	1900.000	TB 20 0 2	18.500	28.113	298.037	17.250	19.500	3.712	125.753
HEPTACHLOR EPOXIDE	42	1	41	0	0	0.02	58.000	TB 20 0 2	58.000	TB 20 0 2	9.000	13.032	126.726	8.500	9.500	3.118	40.453
					TOTAL	====>	3358.000		3358.000								
(PCBs)																	
AROCLOR 1248	42	14	28	0	0	0.33	620.000	TB 27 0 2	10000.000	TB 36 1 3	95.000	278.179	1446.429	90.000	770.000	5.380	2827.696
AROCLOR 1254	42	2	40	0	0	0.05	580.000	TB 12 0 2	1200.000	TB 13 0 2	185.000	271.809	2503.214	170.000	200.000	3.134	850.518
					TOTAL	====>	1200.000		11200.000								
[] Inorganic (INORG) mg/Kg																	
ALUMINUM	41	36	5	14	0	0.88	1800.000	TB 33 0 2	18000.000	TB 26 0 2	8600.000	6812.857	8465.854	4700.000	12000.000	2.099	11610.917
ANTIMONY	38	12	26	8	3	0.32	3.000	PN 1 0 2	33.000	TB 25 0 2	5.000	4.277	6.474	2.000	8.000	2.463	9.196

HOOKER CHEMICAL/RUCO POLYMER SITE
SUMMARY OF CHEMICAL COMPOUNDS (DETECTS + UNDETECTS/2)
SURFACE SOIL INSIDE & OUTSIDE SPILL AREA

COMPOUND	VALID	OCCUR	UN-DETECT	EST	REJECT	FREQ DETECT	MINIMUM DETECTED CONCENTRATION	SAMPLE ID	MAXIMUM DETECTED CONCENTRATION	SAMPLE ID	MEDIAN CONCENTRATION	GEOMETRIC MEAN	MEAN CONCENTRATION	LOWER QUARTILE	UPPER QUARTILE	STNDRD. DEV.	95% CI UPPER LIMIT
ARSENIC	38	33	5	7	3	0.87	1.500	TB 32 0 2	26.000	R1 0 2	11.000	8.800	11.107	6.100	16.000	2.163	15.665
BARIUM	41	36	5	1	0	0.88	6.300	TB 32 0 2	150.000	TB 25 0 2	26.000	22.150	27.400	16.500	31.500	1.921	34.054
BERYLLIUM	41	23	18	0	0	0.56	0.290	TB 11 0 2	11.000	TB 25 0 2	0.370	0.350	0.648	0.170	0.575	2.298	0.671
CADMIUM	41	18	23	14	0	0.44	0.170	Q1 0 2	2.300	R1 0 2D	0.390	0.313	0.619	0.085	0.965	3.384	1.116
CALCIUM	41	35	6	12	0	0.85	200.000	TB 32 0 2	33000.000	TB 01 0 2	950.000	1047.820	3246.488	475.000	2500.000	5.459	11127.565
CHROMIUM	37	32	5	14	4	0.86	6.200	PH I 0 2	89.000	TB 25 0 2	15.000	14.553	19.968	9.800	19.000	2.151	25.852
COBALT	41	36	5	6	0	0.88	0.390	TB 32 0 2	30.000	TB 25 0 2	5.200	4.527	5.755	3.200	7.250	2.090	7.680
COPPER	41	36	5	16	0	0.88	4.700	PH I 0 2	740.000	TB 25 0 2	11.000	13.026	31.961	8.750	20.000	2.403	26.353
IRON	41	36	5	3	0	0.88	1700.000	TB 32 0 2	30000.000	TB 25 0 2	11000.000	9159.145	10800.000	7050.000	15000.000	1.878	13775.306
LEAD	41	36	5	26	0	0.88	3.500	PH I 0 2	900.000	TB 25 0 2	15.000	21.206	58.295	9.500	42.000	3.395	75.952
MAGNESIUM	41	36	5	8	0	0.88	220.000	TB 32 0 2	19000.000	TB 01 0 2	1600.000	1446.510	2450.488	965.000	2075.000	2.644	3368.662
MANGANESE	39	34	5	15	2	0.87	9.000	TB 32 0 2	320.000	TB 25 0 2	120.000	102.504	123.385	83.000	145.000	2.005	165.502
MERCURY	41	8	33	1	0	0.20	0.130	R1 0 2	1.800	TB 11 0 2	0.055	0.088	0.154	0.055	0.135	2.332	0.171
NICKEL	36	31	5	8	5	0.86	2.800	TB 27 0 2	430.000	TB 25 0 2	8.900	8.526	21.156	5.100	11.000	2.591	19.810
POTASSIUM	41	36	5	10	0	0.88	51.000	TB 33 0 2	970.000	TB 26 0 2	340.000	296.921	349.171	205.000	485.000	1.866	443.870
SELENIUM	41	8	33	6	0	0.20	0.340	TB 16 1 3	0.800	TB 17 1 3	0.180	0.365	0.594	0.172	1.150	2.630	0.844 X
SILVER	41	7	34	7	0	0.17	0.820	TB 11 0 2	2.500	TB 01 0 2	0.085	0.138	0.372	0.080	0.095	3.195	0.448
SODIUM	41	36	5	15	0	0.88	56.000	TB 26 0 2	820.000	TB 25 0 2	250.000	224.596	256.854	170.000	315.000	1.711	307.664
THALLIUM	41	1	40	1	0	0.02	0.500	PH I 0 2	0.500	PH I 0 2	0.175	0.173	0.177	0.160	0.180	1.214	0.186
VANADIUM	39	34	5	16	2	0.87	1.000	LP 0 2	31.000	TB 09 0 2	15.000	11.585	13.646	8.450	18.500	1.956	18.240
ZINC	39	34	5	15	2	0.87	10.000	PH I 0 2	1900.000	TB 25 0 2	27.000	33.824	88.179	20.500	53.500	2.717	82.573
					TOTAL	====>	4077.640		106457.900								

EBASCO F-III
08/27/92

HOOKER CHEMICAL/RUCO POLYMER SITE
SUMMARY OF CHEMICAL COMPOUNDS (DETECTS ONLY)
SURFACE SOIL INSIDE & OUTSIDE SPILL AREA

COMPOUND	VALID	OCCUR	UN-DETECT	EST	REJECT	FREQ DETECT	MINIMUM DETECTED CONCENTRATION	SAMPLE ID	MAXIMUM DETECTED CONCENTRATION	SAMPLE ID	MEDIAN CONCENTRATION	GEOMETRIC MEAN	MEAN CONCENTRATION	LOWER QUARTILE	UPPER QUARTILE	STNDRD. DEV.	95% CI UPPER LIMIT
I) Base Neutral Acid (BNA) ug/Kg																	
(Phenols)																	
4-METHYLPHENOL	41	1	40	1	0	0.02	220.000	TB 01 0 2	220.000	TB 01 0 2	0.000	220.000	220.000	0.000	0.000	1.000	********** X
PHENOL	41	1	40	1	0	0.02	290.000	TB 14 1 3	290.000	TB 14 1 3	0.000	290.000	290.000	0.000	0.000	1.000	********** X
					TOTAL	====>	510.000		510.000								
(Polycyclic Aromatic Hydrocarbons)																	
2-METHYLNAPHTHALENE	41	1	40	1	0	0.02	390.000	TB 01 0 2	390.000	TB 01 0 2	0.000	390.000	390.000	0.000	0.000	1.000	********** X
ACENAPHTHENE	41	1	40	1	0	0.02	210.000	TB 40 0 2	210.000	TB 40 0 2	0.000	210.000	210.000	0.000	0.000	1.000	********** X
ANTHRACENE	41	3	38	3	0	0.07	60.000	R1 0 2	230.000	TB 40 0 2	230.000	130.217	150.000	0.000	0.000	2.004	14671.538 X
BENZO(a)ANTHRACENE	41	9	32	7	0	0.22	85.000	TB 20 0 2	810.000	TB 40 0 2	330.000	257.209	336.111	175.000	555.000	2.172	825.395 X
BENZO(a)PYRENE	41	3	38	1	0	0.07	270.000	TB 40 0 2	410.000	PW K 0 2	410.000	350.809	356.667	0.000	0.000	1.254	698.505 X
BENZO(b)FLUORANTHENE	41	9	32	5	0	0.22	100.000	TB 20 0 2	1900.000	TB 40 0 2	510.000	374.482	571.111	220.000	870.000	2.650	2151.282 X
BENZO(G,H,I)PERYLENE	41	3	38	1	0	0.07	240.000	TB 25 0 2	500.000	TB 01 0 2	500.000	366.428	383.333	0.000	0.000	1.462	1599.194 X
BENZO(k)FLUORANTHENE	41	3	38	2	0	0.07	140.000	TB 40 0 2	630.000	TB 01 0 2	630.000	294.638	353.333	0.000	0.000	2.122	100300.650 X
CHRYSENE	41	11	30	7	0	0.27	95.000	TB 20 0 2	1400.000	TB 01 0 2	250.000	279.960	412.273	150.000	320.000	2.435	941.273
DIBENZOFURAN	41	1	40	1	0	0.02	250.000	TB 01 0 2	250.000	TB 01 0 2	0.000	250.000	250.000	0.000	0.000	1.000	********** X
FLUORANTHENE	41	17	24	11	0	0.41	70.000	TB 27 0 2	2400.000	TB 01 0 2	250.000	272.123	481.059	135.000	540.000	2.796	1041.098
FLUORENE	41	2	39	2	0	0.05	100.000	TB 40 0 2	320.000	TB 01 0 2	320.000	178.885	210.000	0.000	0.000	2.276	1537.698 X
INDENO(1,2,3-CD)PYRENE	41	4	37	2	0	0.10	130.000	TB 40 0 2	790.000	TB 25 0 2	630.000	340.962	417.500	280.000	790.000	2.159	47258.040 X
NAPHTHALENE	41	1	40	1	0	0.02	270.000	TB 01 0 2	270.000	TB 01 0 2	0.000	270.000	270.000	0.000	0.000	1.000	********** X
PHENANTHRENE	41	13	28	11	0	0.32	32.000	R1 0 2D	1200.000	TB 01 0 2	120.000	145.513	281.231	79.500	290.000	2.989	773.483
PYRENE	41	17	24	14	0	0.41	73.000	TB 12 0 2	1600.000	TB 40 0 2	210.000	223.382	361.471	120.000	355.000	2.477	628.015
					TOTAL	====>	2515.000		13310.000								

'<' GREATER THAN MAXIMUM CONCENTRATION; (*), ASTERISKS, INDICATE THAT THE NUMBER OF OCCURRENCES IS TOO SMALL TO ALLOW CALCULATION

HOOKER CHEMICAL/RUCO POLYMER SITE
SUMMARY OF CHEMICAL COMPOUNDS (DETECTS ONLY)
SURFACE SOIL INSIDE & OUTSIDE SPILL AREA

COMPOUND	VALID	OCCUR	UN-DETECT	EST	REJECT	FREQ DETECT	MINIMUM DETECTED CONCENTRATION	SAMPLE ID	MAXIMUM DETECTED CONCENTRATION	SAMPLE ID	MEDIAN CONCENTRATION	GEOMETRIC MEAN	MEAN CONCENTRATION	LOWER QUARTILE	UPPER QUARTILE	STNDRD. DEV.	95% CI UPPER LIMIT
(Benzenes)																	
HEXACHLOROBENZENE	41	2	39	1	0	0.05	270.000	TB 20 0 2	580.000	TB 21 0 2	580.000	395.727	425.000	0.000	0.000	1.717	1231.866 X
					TOTAL	====>	270.000		580.000								
(Phthalate Esters)																	
BIS(2-ETHYLHEXYL)PHTHALATE	12	9	3	4	29	0.75	500.000	TB 20 0 2	34000.000	TB 01 0 2	4000.000	2634.301	7143.333	880.000	10100.000	4.487	192293.859 X
BUTYL BENZYL PHTHALATE	41	1	40	0	0	0.02	800.000	TB 01 0 2	800.000	TB 01 0 2	0.000	800.000	800.000	0.000	0.000	1.000	********** X
DI-n-BUTYLPHTHALATE	25	1	24	0	16	0.04	7200.000	TB 01 0 2	7200.000	TB 01 0 2	0.000	7200.000	7200.000	0.000	0.000	1.000	********** X
DI-n-OCTYL PHTHALATE	41	1	40	0	0	0.02	4200.000	TB 01 0 2	4200.000	TB 01 0 2	0.000	4200.000	4200.000	0.000	0.000	1.000	********** X
					TOTAL	====>	12700.000		46200.000								
[] Pesticide/Polychlorinated Biphenyl (PEST/PCB) ug/Kg																	
(Pesticides)																	
4-4-DDD	42	1	41	0	0	0.02	1400.000	TB 20 0 2	1400.000	TB 20 0 2	0.000	1400.000	1400.000	0.000	0.000	1.000	********** X
4-4-DDT	41	1	40	0	1	0.02	1900.000	TB 20 0 2	1900.000	TB 20 0 2	0.000	1900.000	1900.000	0.000	0.000	1.000	********** X
HEPTACHLOR EPOXIDE	42	1	41	0	0	0.02	58.000	TB 20 0 2	58.000	TB 20 0 2	0.000	58.000	58.000	0.000	0.000	1.000	********** X
					TOTAL	====>	3358.000		3358.000								
(PCBs)																	
AROCLOR 1248	42	14	28	0	0	0.33	620.000	TB 27 0 2	10000.000	TB 36 1 3	2700.000	2449.469	4149.286	770.000	10000.000	3.040	12927.007 X

HOOKER CHEMICAL/RUCO POLYMER SITE
SUMMARY OF CHEMICAL COMPOUNDS (DETECTS ONLY)
SURFACE SOIL INSIDE & OUTSIDE SPILL AREA

COMPOUND	VALID	OCCUR	UN-DETECT	EST	REJECT	FREQ DETECT	MINIMUM DETECTED CONCENTRATION	SAMPLE ID	MAXIMUM DETECTED CONCENTRATION	SAMPLE ID	MEDIAN CONCENTRATION	GEOMETRIC MEAN	MEAN CONCENTRATION	LOWER QUARTILE	UPPER QUARTILE	STNDRD. DEV.	95% CI UPPER LIMIT
AROCLOR 1254	42	2	40	0	0	0.05	580.000	TB 12 0 2	1200.000	TB 13 0 2	1200.000	834.266	890.000	0.000	0.000	1.672	2439.400 X
					TOTAL	===>	1200.000		11200.000								

APPENDIX B

HKR 001 1612

APPENDIX B

TOXICOLOGICAL PROFILES

HKR 001 1613

Acenaphthene

Acenaphthene is found in coal tar and is a member of the polynuclear aromatic chemical hydrocarbon class od Aiello (1955) noted increases in spontaneous abortions, premature births and gynecological problems among female workers exposed to metallic antimony dusts, antimony trioxide and antimony pentoxide (USEPA 1980).

No increase in the incidence of tumors has been observed in rats orally exposed to antimony (Goyer 1986). However, increased chromosome defects occur when human lymphocytes are incubated with antimony salt (Paton and Allison 1975) and Syrian hamster embryo cells undergo neoplastic transformation when treated with antimony acetate (Casto et al. 1979, Goyer 1986). USEPA (1991) has derived an oral reference dose (RfD) of 4 x 10-4 mg/kg/day for antimony based on a chronic oral study by Schroeder et al. (1970) which resulted in cancer, decreased lifespans and altered blood chemistry in rats exposed to the LOAEL of 0.35 mg/kg/day. An uncertainty factor of 1000 was applied in determining the RfD.

Subchronic oral administration of acenaphthene to lab animals resulted in a loss in body weight, blood changes, changes in blood serum enzymic levels, morphologic changes in liver and kidneys, mild bronchitis and localized inflammation of the bronchial tissue (Knobloch, et al., 1969). Rates exposed to acenaphthene vapors chronically were reported to have altered reflexes, increased liver nucleic acids, pneumonia and hyperplasia and metaplasia of bronchial epithelium. No signs of malignancy were observed (Resntly to bladder, liver and lung cancers (Tseng et al. 1968, Chen et al. 1986).

Acenaphthene has been classified by USEPA (1991a) in Group D, Not Classified, due to inadequate evidence of carcinogenicity in animals. USEPA (1991a) has recommended an oral RfD for acenaphthene of 6.0 x 10-2 mg/kg/day based on a mouse study in which oral gavage of 175 mg/kg/day for 90 days resulted in hepatotoxicity. An uncertainty factor of 3000 was applied in determining the RfD.

Arsenic

Arsenic is readily absorbed via the oral and inhalation routes. Both inorganic and organic forms of arsenic are readily absorbed from the gastrointestinal tract with the more soluble forms being more readily absorbed than the insoluble forms (USEPA, 1984). Approximately 95 percent of soluble inorganic arsenic administered to rats is absorbed from the gastrointestinal tract (Coulson et al. 1935, Ray-Bettley and O'Shea 1975). The USEPA (1984) assumes that, on the average, 70-80 percent of arsenic is absorbed in the respiratory tract. Dermal absorption is not significant (USEPA, 1984).

Acute exposure of humans to high levels (71 mg/kg) of metalloid arsenic has been associated with gastrointestinal effects, hemolysis, and neuropathy. Chronic exposure of humans to arsenic can produce toxic effects on both the peripheral and central nervous systems, keratosis, hyperpigmentation, precancerous dermal lesions and cardiovascular damage (USEPA, 1984). Arsenic is embryotoxic, fetotoxic, and teratogenic in several animal species (USEPA, 1984). Arsenic is a known human carcinogen. Epidemiological studies of workers in smelters and in plants manufacturing arsenical pesticides have shown that inhalation of arsenic is strongly

associated with lung cancer and perhaps with hepatic angiosarcoma (USEPA 1984). Ingestion of arsenic has been linked to a form of skin cancer and more rece respiratory tract tumors developed after continuous exposure to 100-5000 ug/m3 of arsenic (USEPA 1991,1991a). An oral slope factor of 1.75 (mg/kg/day)-1 was calculated from a unit risk of 5 x 10-5/ug/l based on a study by Tseng et al. (1977) which ref compounds (Sax, 1984). Oral and inhalation routes of exposure are important for humans (U.S. EPA, 1987). Acenaphthene is irritating to the skin and mucous membranes and may cause vomiting if swallowed in large quantities (Sax, 1984).

The USEPA has classified arsenic in Group A - Human Carcinogen, and has developed an inhalation slope factor of 15 (mg/kg/day)-1 based on an inhalation unit risk of 4.3 x 10-3/ug/m3 (USEPA, 1991a). This value is based on a human study by Brown and Chu (1983a,b,c) in whichhetyuk, et al, 1970). Pertinent data regarding chronic exposure, teratogenicity and carcinogenicity could not be located in the available literature (U.S. EPA, 1979).

Aldrin

Aldrin is absorbed following inhalation exposure; between 20-50% of the inhaled vapor is absorbed and retained (Beyermann and Eckrich 1973, Bragt et al. 1984, as cited in Shell 1984). Absorption occurs slowly following ingestion (Farb et al. 1973, Heath and Vandekar 1984, Hunter and Robinson 1967, 1969, Iatropoulos et al. 1975) and also during dermal exposure (Feldmann and Maibach 1974, Sundaram et al. 1978a,b). It is metabolically converted to dieldrin in fatty tissues (ACGIH 1987) and these two insecticides are considered to have similar effects.

Acute symptoms of aldrin intoxication in humans and animals following ingestion or inhalation indicate CNS stimulation manifested primarily as hyperexcitability, muscle twitching and cinvulsions (with EEG anomalies in humans) (NCI 1978, Hayes 1982, Hoogendam et al. 1962, Jager 1970). Experimental studies indicate that dogs orally exposed for longer periods of time to levels as low as 0.2 mg/kg aldrin developed hepatic toxicity (Fitzhugh et al. 1964, Treon and Cleveland 1955). Several lifetime studies in rats fed aldrin resulted in histologic liver changes and increased liver-to-body weight ratios at doses as low as 0.5 ppm, (Fitzhugh et al. 1964, Treon and Cleveland 1955, Walker et al. 1969 and Deichmann et al. 1970). Aldrin produced fetotoxic and/or teratogenic effects in hamsters fed a single oral dose of 50 mg/kg and in mice fed a single oral dose of 35 mg/kg (Ottolenghi et al. 1974). Other studies with mice (Good and Ware 1969, Deichmann 1971) have associated reduced fertility, reduced litter and/or postnatal mortality with the administration of aldrin. No compelling evidence for genotoxic effects due to aldrin exist in the literature (ATSDR 1987). Chronic aldrin exposure has produced an increase in hepatocellular tumors in mice, but not in rats (ATSDR 1987). Aldrin has been shown to produce liver tumors in both male and female mice following chronic oral exposure (Davis 1965, Davis and Fitzhugh 1962, Epstein 1975, NCI 1978). In contrast, chronic feeding studies with aldrin in rats indicate that oral exposure at levels of up to 250 ppm was associated with nonneoplastic changes in the liver (NCI 1978, Fitzhugh et al. 1964, Deichmann et al. 1967, 1970, Song and Harville 1964, Treon and Cleveland 1955).

USEPA (1991) has classified aldrin as a Group B2 agent - Probable Human Carcinogen and has developed an oral and inhalation slope factor of 1.7 x 10+1 (mg/kg/day)-1. This value is based on several mouse dietary studies in which liver tumors were the effect of concern. USEPA (1991) has derived an oral reference dose (RfD) for aldrin of 3.0 x 10-5 mg/kg/day based on a

study in which rats fed 0.025 mg/kg/day (LOAEL) aldrin in the diet for 2 years developed liver lesions (Fitzhugh et al. 1964). An uncertainty factor of 1000 was used to derive the RfD.

Antimony

Antimony is a metal which occurs both in the trivalent and pentavalent oxidation states (USEPA 1980). Absorption through the respiratory and gastrointestinal tracts is low and occurs slowly (USEPA 1980, Goyer 1986). Occupational exposure to the trivalent and pentavalent forms through inhalation may produce such acute effects as rhinitis and acute pulmonary edema. Chronic inhalation exposures to other antimony compounds may result in rhinitis, pharyngitis, tracheitis and in time bronchitis and emphysema (Goyer 1986). Antimony does accumulate in lung tissue (Elinder and Friberg 1977). Reports by Belyaeva (1967) anported an increased prevalence of skin cancers in humans from arsenic exposure in drinking water (USEPA 1991). The USEPA (1991a) has derived an oral reference dose of 1.0x10-3 mg/kg/daybased on human exposure to 1 ug/kg/day in which keratosis and hyperpigmentation were observed (Tseng 1977). This value is under review by an RfD Work Group.

Barium

Barium is a relatively abundant naturally occurring metal which accumulates in plants and animals. While no definitive studies have been located in the literature, the absorption of barium in humans has been estimated at approximately 5% in the adult (ICRP 1973). This number may, however, be considerably higher for adults (Harrison et al. 1967) and children (Lengemann 1959). Soluble compounds of barium are known to be absorbed and their toxicity depends on their solubility. Small amounts of barium accumulate in the skeleton; moreover, the lungs have exhibited a mean dry weight concentration of 1 ppm. Mean concentrations in other organs have been reported to be in the range of 0.10 ppm in the kidneys; 0.08 ppm in the spleen; 0.05 ppm in muscle, including cardiac muscle tissues; 0.05 ppm in the brain; and 0.03 ppm in the liver.

Initial symptoms of barium poisoning are gastrointestinal disorders, including nausea, vomiting, colic, and diarrhea, followed by myocardial (heart muscle) stimulation and general muscular stimulation with tingling in the extremities. Severe cases progress to a loss of tendon reflexes, general muscular paralysis, and death from respiratory arrest or ventricular fibrillation (irregular heartbeat). (Proctor et al. 1988). The barium ion is a physical antagonist of potassium in vivo, and symptoms of barium poisoning are attributable to hypokalemia (lack of potassium in the blood). The effect is probably due to a transfer of potassium from extracellular to intracellular compartments rather than to urinary or gastrointestinal losses. Inadequate studies exist to evaluate the potential teratogenic/reproductive or mutagenic effects of barium. (USEPA 1985, Klaassen et al. 1986).

Inadequate studies exist to determine the carcinogenicity of barium. The USEPA (1991) has recommended an oral reference dose (RfD) of 7x10-2 mg/kg/day based on numerous human and rodent studies. According to Wones et al. (1991) a NOAEL of 0.21 mg/kg/day exists for barium with the critical effect being increased blood pressure. A subchronic to chronic human drinking water study by Brenniman and Levy (1984) found no LOAEL. Also recommended by the USEPA (1991a) is an inhalation reference dose of 1x10-4 mg/kg/day based on a rat study in which exposure to 1.15 mg barium carbonate/m3 (0.80 mg Ba/m3) for 4 hours per day for 4

months (0.14 mg Ba/kg/day) resulted in fetotoxicity. Uncertainty factors of 3 and 1000 were used to derive oral and inhalation reference doses, respectively.

Benzene

Benzene is readily absorbed following oral intake and inhalation exposure (USEPA 1985). The toxic effects of benzene in humans and other animals following exposure by inhalation include central nervous system effects, hematological effects and immune system depression.

In humans, acute exposures to high concentrations of benzene vapors have been associated with dizziness, nausea, vomiting, headache, drowsiness, narcosis, coma and death (NAS 1976). Chronic exposure to benzene vapors also can produce reduced leukocyte, platelet and red blood cell counts (USEPA 1985). Benzene induced both solid tumors and leukemias in rats exposed by gavage (Maltoni et al. 1985). Many studies have also described a causal relationship between exposure to benzene by inhalation (either alone or in combination with other chemicals) and leukemia in humans (IARC, 1982).

Applying the USEPA's criteria for evaluating the overall evidence of carcinogenicity to humans, benzene is classified in Group A- Human Carcinogen based on adequate evidence of carcinogenicity from epidemiological studies. The USEPA (1991) has recommended both an oral and inhalation slope factor for benzene of 2.9x10-2 (mg/kg/day)-1. This value was based on several studies in which increased incidences of leukemia were observed in humans occupationally exposed to benzene via inhalation (Rinsky 1981, Ott et al. 1978, Wong 1983).

Benzene Hexachloride (BHC)

Technical-grade benzene hexachloride (also know as BHC or hexachlorocyclohexane) is composed mainly of the alpha (55- 80%), beta (5-14%), gamma (8-15%), delta (2-16%), and epsilon (1-5%) isomers. BHC is absorbed by humans and animals following oral, inhalation, and dermal exposure (EPA, 1985; Hayes, 1982). Absorption of the various isomers of BHC following ingestion is greater than 90% of the administered dose (Albro and Thomas, 1974). The alpha-, beta-, and delta- isomers of BHC primarily act as depressants of the central nervious system producing symptoms of tremors, prostration, and flacidity of the entire musculature. All the isomers induce hepatic enzymes (Hayes, 1982). Various reproductive and developmental effects from exposure to beta- and gamma-BHC have been demonstrated in rodents (Hayes, 1982; EPA, 1985).

Hepatocellular tumors have been observed in mice exposed to alpha-and beta-BHC in the diet (EPA, 1991). The most tumorigenic isomer is alpha-BHC, followed by the gamma-, beta- , delta-, and epsilon-isomers (Hayes, 1982; EPA, 1985; EPA (1991) has classified beta-BHC in Group C-Possible Human Carcinogen due to limited evidence of carcinogenicity in animals in the absence of data on humans. EPA (1991) has estimated an oral and inhalation slope factor for beta-BHC of and 1.8 (mg/kg/day)-1 based on studies by Ito et al. (1973), Munir et al. (1983), and Thorpe and Walker (1973), respectively. These slope factors were derived based on the incidence of hepatic tumors in mice exposed chronically to BHC in the diet (EPA, 1991).

Benzoic Acid

Benzoic acid and sodium benzoate are added to food as preservatives (FASEB 1973). Since both are absorbed rapidly and completely by the gastrointestinal tract, it can be assumed that exposure to sodium benzoate is essentially equivalent to that of benzoic acid. (USEPA 1990).

Early studies on humans indicate that laboratory animals are inappropriate models for the toxicity of benzoic acid in humans. Sodium benzoate appeared to have no maternal or fetal toxicity or teratogenic potency in mice, rats, hamsters or rabbits when administered orally (FDRL 1972). The highest tested dosages were 175, 175, 300 and 250 mg/kg/day in each species, respectively (USEPA 1990). In a chronic dietary study by Shtenberg and Ignat'ev (1970) doses of 40 mg/kg/day for 17 months were associated with decreased resistance to stress in mice and possibly reduced food and water intake in rats after 18 months. Ignat'ev (1965) in another report stated that 80 mg/kg/day exposures for 18 months were not associated with adverse effects on body weight, survival or pathology in rats. In another chronic study, Marquardt (1960) associated decreased food intakes and decreased growth in rats with exposures to 750 mg/kg/day (1.5% in the diet) of benzoic acid for 18 months. However, exposures to 500 mg/kg/day (1% of the diet) for lifetime did not result in any signs of toxicity or adverse reproductive effects over 4 generations. Gerlach (1909) reported no externally visible effects in humans ingesting benzoic acid at 0.5-1.0 g/day for 44 consecutive days or for 82/86 or 88/92 days although Wiley and Bigelow (1908) observed irritation, discomfort, weakness and malaise in humans given oral bolus doses of less than or equal to 1.75 g/day over a 20-day period (25 mg/kg/day).

The USEPA (1991) has derived an oral reference dose of 4.0 mg/kg/day for benzoic acid based on the human per capita daily dietary intake of benzoic acid equivalent to 312 mg/day. An uncertainty factor of 1 was used to determine the RfD.

Beryllium

Occupational exposure to beryllium results in high levels in the lungs and bone and lower levels in the liver and kidney (Tepper et al. 1961 and Meehan and Smyth 1967). Respiratory toxicity is the main effect of inhalation exposure to beryllium. Acute inhalation exposure has been found to result in acute chemical pneumonitis. Chronic beryllium pneumonitis (berylliosis) is characterized by the development of granulomatous lesions of the lung. Dermal exposure to soluble beryllium compounds can cause contact dermatitis (USEPA 1980 as cited in USEPA 1987). Beryllium is carcinogenic via inhalation and intratracheal routes in experimental animals resulting primarily in lung and/or bone tumors (USEPA 1986 as cited in 1987). Several epidemiological studies have suggested that occupational exposure to beryllium may result in an increased risk of lung cancer although the data are inconclusive (USEPA 1987).

USEPA (1991) has classified beryllium as a group B2 Agent - Probable Human Carcinogen based on sufficient evidence of carcinogenicity in animals but inadequate evidence of carcinogenicity in humans. The Carcinogen Assessment Group (CAG) calculated an inhalation slope factor of 8.4 (mg/kg/day)-1 based on an epidemiological occupational exposure study by Wagoner et al. (1980). USEPA (1991, 1991a) has also developed an oral slope factor of 4.3 (mg/kg/day)- 1 based on an oral drinking water study by Schroeder and Mitchner (1975) in which tumors developed in exposed rats. USEPA (1991) has developed an oral reference dose (RfD) for

beryllium of 5x10-3 mg/kg/day based on the study by Schroeder and Mitchner (1975) in which rats exposed to beryllium sulfate in drinking water for lifetime did not exhibit adverse effects given 0.54 mg/kg/day (NOAEL); no LOAEL was determined. An uncertainty factor of 100 was used in calculating the oral RfD.

Bis(2-ethylhexyl)phthalate

Bis(2-ethylhexyl)phthalate (BEHP) also known as diethylhexyl phthalate (DEHP) is readily absorbed following oral or inhalation exposure (USEPA 1980). BEHP is reported to be carcinogenic in rats and mice, causing increased incidences of hepatocellular carcinomas or neoplastic nodules following oral administration (NTP 1982). Chronic exposure to relatively high concentrations of BEHP in the diet can cause retardation of growth and increased liver and kidney weights in laboratory animals (NTP 1982, USEPA 1980). Reduced fetal weight and an increased number of resorptions have been observed in rats exposed orally to BEHP (USEPA 1980). BEHP has previously been classified in Group B2 - Probable Human Carcinogen (USEPA 1991). USEPA (1991) has recommended an oral reference dose (RfD) for BEHP of 2 x 10-2 mg/kg/day based on a subchronic to chronic oral bioassay by Carpenter et al. (1953) in guinea pigs in which increased relative liver weight was observed after exposures of 19 mg/kg/day (LOAEL) (0.04% diet for 1 year). USEPA (1991) has also developed an oral slope factor of 1.4 x 10-2 (mg/kg/day)-1 based on a 103-week mouse dietary study in which hepatocellular carcinomas and adenomas were observed.

2-Butanone (Methyl Ethyl Ketone)

Absorption of methyl ethyl ketone from the gastrointestinal tract and from the lungs has been inferred from systemic toxic effects observed following acute oral exposure and acute and subchronic inhalation exposures (Lande et al. 1976). Schwetz et al. (1974) reported that methyl ethyl ketone caused retarded fetal development and some teratogenic effects (acaudia, imperforate anus, and brachygnathia) in rats at air concentrations of 3,000 ppm (9,000 mg/m3). Hepatotoxicity and neurological effects have also been reported in rats exposed to methyl ethyl ketone by inhalation (Cavender et al. 1983, Takeguchi et al. 1983).

The USEPA (1991, 1991a) has determined oral and inhalation reference doses of 5 x 10-2 mg/kg/day and 9 x 10-2 mg/kg/day, respectively, based on a rat developmental toxicity study in which fetotoxic effects were observed by Schwetz et al. (1974) at LOAELs above the NOAELs determined by LaBelle and Brieger (1955). An uncertainty factor of 1000 was applied to derive the oral RfD.

Butyl Benzyl Phthalate

Limited data exist on the absorption of butyl benzyl phthalate following exposure. A review of the existing literature indicates that butyl benzyl phthalate is not highly toxic. In male rats fed 50,000 or 100,000 mg/kg in their diet, testicular degeneration was observed. Thymic atrophy was also reported in both male and female rats given 100,000 mg/kg. Male rats fed 25,000 mg/kg for 90 days exhibited depressed body weight gain and testicular degeneration. No adverse effects were noted in female rats or mice in either study (National Toxicology Program 1981).

Butyl benzyl phthalate has been tested for carcinogenicity in chronic feeding studies using mice and female rats, and via intraperitoneal injection in male mice (IARC 1982). In female rats, an increased incidence of myelomonocytic leukemia was observed in the high exposure group. No increased tumor incidence was noted for mice (IARC 1982). The USEPA's Health Effects Assessment document (1991) has classified butyl benzyl phthalate in Group C - Possible Human Carcinogen and has recommended an oral reference dose (RfD) of 0.2 mg/kg/day based in a dietary study by the NTP (1985) in which exposed rats showed weight gain as well as testicular, hepatic and kidney effects.

Cadmium

Gastrointestinal absorption of cadmium in humans ranges from 5-6% (USEPA 1985a) Pulmonary absorption of cadmium in humans is reported to range from 10% to 50% (CDHS, 1986). Cadmium bioaccumulates in humans, particularly in the kidney and liver (USEPA 1985a,b). Chronic oral or inhalation exposure of humans to cadmium has been associated with renal dysfunction, itai-itai disease (bone damage), hypertension, anemia, endocrine alternations, and immunosuppression. Renal toxicity occurs in humans at a renal cortex concentration of cadmium of 200 about ug/g (USEPA, 1985b). Epidemiological studies have demonstrated a strong association between inhalation exposure to cadmium and cancers of the lungs, kidneys, and prostate (USEPA, 1985b). In experimental animals, cadmium induces injection-site sarcomas and testicular tumors. When administrated by inhalation, cadmium chloride is a potent pulmonary carcinogen in rats. Cadmium is a well-documented animal teratogen (USEPA, 1985b).

USEPA (1991) classified cadmium as a Group B1 Agent - Probable Human Carcinogen by inhalation. This classification applies to agents for which there is limited evidence of carcinogenicity in humans from epidemiologic studies but significant evidence in animals. USEPA (1991) derived an inhalation slope factor of 6.3 (mg/kg/day)-1 for cadmium based on an epidemiologic study by Thun et al. (1985). USEPA (1991) has derived two separate oral reference doses (RfDs). The RfD associated with oral exposures to drinking water is 5 x 10-4 mg/kg/day based on a NOAEL of 0.005 mg/kg/day with the critical effect being proteinuria (USEPA, 1985). (USEPA, 1991). The RfD associated with exposure to cadmium in food or other nonaqueous oral exposures is 1 x 10-3 mg/kg/day based on a NOAEL of 0.01 mg/kg/day in chronic human exposure studies (USEPA, 1985). (USEPA, 1991). An uncertainty factor of 10 was used to derive these reference doses.

Carbon Disulfide

Carbon disulfide may be absorbed through the skin as a vapor or liquid, inhaled, or ingested. It affects the central nervous system, cardiovascular system, eyes, kidneys, liver and skin. In acute poisoning, early excitation of the central nervous system occurs, followed by depression with stupor, restlessness and unconsciousness. If recovery occurs, the patient usually passes through the after-stage of narcosis with nausea, vomiting and headaches (Sax 1984). Also possible are motor disturbances of the bowel, anemia, disturbances of cardiac rhythm, loss of weight, polyuria and menstrual disorders (USEPA 1989).

Hardin et al. (1981) observed no effects on fetal development at oral dosage equivalents of 5 and 10 mg/kg in rats and 11 and 22 mg/kg in rabbits. Price et al. (1984) observed fetal

resorptions in rabbits at oral doses of 25 mg/kg/day; however, fetotoxicity and fetal malformations did not occur in rats at 100 mg/kg/day. An epidemiological study by Johnson et al. (1983) suggests the possibility of neurotoxicity due to carbon disulfide exposure, but the study is inconclusive.

Carbon disulfide has not been evaluated by the USEPA (1991) for evidence of human carcinogenic potential. The oral reference dose (RfD) for carbon disulfide has been set at 0.1 mg/kg/day by the USEPA (1991) based on a study by Hardin et al. (1981) in which fetal toxicity/malformations were observed in rats and rabbits following inhalation exposure to 20 ppm (62.3 mg/m3 or 11.0 mg/kg/day for 34 weeks prior to breeding and throughout pregnancy. The oral RfD for carbon disulfide may change in the near future pending the outcome of a further review now being conducted by the Oral RfD Work Group (USEPA 1991). USEPA (1991a) has recommended an inhalation reference dose of 2.9x10-3 mg/kg/day based on rat studies by Tabacova et al. (1978, 1983) in which rats inhaling 10 mg/m3 of carbon disulfide 8 hrs/day during gestation developed fetal toxicity.

Chlordane

Chlordane is an organochlorine pesticide which has been used as an agricultural and home insecticide (Clayton and Clayton, 1981). As of 1983, the only use for chlordane in the U.S. is for termite control (USEPA, 1991). Chlordane exposure occurs via inhalation, skin adsorption and ingestion (Sittig, 1985). Symptoms of exposure include increased sensitivity to stimuli, tremors, muscular incoordination and convulsions with or without coma (USEPA, 1991).

The toxic effects in rats resulting from daily gastric intubation of chlordane at various doses for 15 days were histologic changes in the liver at all dose levels, and central nervous system effects at higher dose levels (Ambrose et al., 1953). Liver carcinomas were induced in mice of both sexes in two additional studies. Velsicol (1983) reported a significant increase in aderomas of the liver for male rats receiving 25 ppm in a 130 week study carcinogenesis bioassay.

Chlordane has also induced mutagenic, teratogenic, metabolic and biochemical disorders in mice. Systematically, chlordane may act as a cumulative neurotoxin (USEPA, 1984).

Chlordane has been classified by USEPA (1991) in Group B2- Probable Human Carcinogen and has developed an oral and inhalation slope factor of 1.3 x 10o (mg/kg/day)-1 based on two dietary bioassays on mice which resulted in hepatocellular carcinomas (NCI, 1977; Velsicol, 1983). USEPA (1991) has also recommended an oral RfD of 6.0 x 10-5 mg/kg/day for chlordane. An uncertainty factor of 1000 was applied in determining the RfD.

Chlorobenzene

Evidence from toxicity studies suggests that chlorobenzene is absorbed after oral and inhalation exposure (USEPA 1985). Acute and chronic exposure to chlorobenzene has been associated in humans and experimental animals with central nervous system (CNS) effects, hepatic and renal toxicity and respiratory distress. Results of teratogenic/reproductive studies with rats and rabbits indicate the chlorobenzene induces maternal toxicity but no fetal malformations (USEPA 1985). USEPA (1991) has derived an oral reference dose (RfD) of 2 x 10-2 mg/kg/day based on a study

in which dogs orally administered chlorobenzene for 13 weeks showed histopathologic changes in the liver at a LOAEL of 54.5 mg/kg/day (Monsanto Co. 1967a, Knapp et al. 1971). The USEPA (1991a) has derived an inhalation reference dose (RfD) of 5 x 10-3 mg/kg/day based on a rat study in which the inhalation of 53 mg/kg/day (75 ppm), 7 hours/day, 5 days/week for 120 days resulted in liver and kidney effects (Dilley 1977). Uncertainty factors of 1000 and 10000, respectively, were used in deriving the reference doses.

Chloroform

Chloroform, a trihalomethane, is rapidly absorbed through the respiratory tract and gastrointestinal tract in humans and experimental animals; dermal absorption from contact of the skin with liquid chloroform can also occur (USEPA 1985). Chloroform has been reported to induce renal epithelial tumors in rats and hepatocellular carcinomas in mice. Suggestive evidence from human epidemiological studies indicates that exposure to chloroform and other trihalomethanes in water supplies may be associated with an increased incidence of bladder tumors (USEPA 1985).

In humans, acute exposure to high concentrations of chloroform may result in death caused by ventricular fibrillation. Exposure to chloroform may also cause irritation of the skin, eyes, and gastrointestinal tract (USEPA 1984, 1985). In experimental animals, chronic exposure may lead to hepatic, renal, and cardiac effects and central nervous system depression (USEPA 1985).

Chloroform has been classified by USEPA in Group B2 - Probable Human Carcinogen (USEPA 1991). USEPA (1991) developed an oral slope factor for chloroform of 6.1 x 10-3 (mg/kg/day)-1 based on a study in which a significant increase in kidney tumors was observed in rats exposed to the highest dose of chloroform in drinking water (Jorgenson et al. 1985). USEPA (1991) also developed an inhalation slope factor of 8.1 x 10-2 (mg/kg/day)-1 based on an oral gavage bioassay in which treated mice and rats developed significantly more hepatocellular carcinomas than untreated animals (NCI 1976). USEPA (1991) also derived an oral RfD of 0.01 mg/kg/day for chloroform based on a chronic oral bioassay in dogs in which fatty cyst formation in the liver was observed at the LOAEL of 12.9 mg/kg/day (Heywood et al. 1979). An uncertainty factor of 1000 was used to derive this reference dose.

Chromium (Hexavalent)

Gastrointestinal absorption of chromium VI in humans and animals occurs readily (approximately 2-10%) (USEPA, 1985). Chromium is an essential micronutrient and is not toxic in trace quantities (USEPA, 1980). High levels of soluble chromium (VI) can produce kidney and liver damage following acute oral exposures, but target organs following chronic oral exposures have not been identified (USEPA, 1984). Chronic inhalation exposure may cause respiratory system damage (USEPA, 1984). Further, epidemiological studies of worker populations have clearly established that inhaled chromium (VI) is a human carcinogen, with the respiratory passages and the lungs as the target organs (USEPA, 1984). Ingestion of chromium (VI) has not been associated with carcinogenicity in humans or experimental animals (USEPA, 1984). Certain chromium salts have been shown to be teratogenic and embryotoxic in mice and hamsters following intravenous or intraperitoneal injection (USEPA, 1984).

USEPA (1991) has classified inhaled chromium (VI) in Group A - Probable Human Carcinogen by inhalation. Ingested chromium (VI) has not been classified with respect to carcinogenicity. USEPA (1991) developed an inhalation slope factor of 42 (mg/kg/day)-1 for chromium (VI) based on an increased incidence of lung cancer in workers exposed to chromium over a 6 year period, and followed for approximately 40 years (Mancuso, 1975). USEPA (1991) derived an oral reference dose of 5.0x10-3 mg/kg/day for chromium (VI) based on a study by MacKenzie et al. (1958) in which no observable adverse effects were observed at a dose level of 2.4 mg/kg/day (NOAEL) and no LOAEL was observed in rats exposed to chromium (VI) in drinking water for 1 year. An uncertainty factor of 500 was used in this calculation. USEPA (1991a) has also calculated an inhalation reference dose of 5.71x10-7 mg/kg/day based on an air concentration of 2x10-6 mg/m3.

Chromium (Trivalent)

The trivalent form of chromium is the most common form found in nature. It is an essential nutrient required in trace quantities for normal glucose metabolism. The toxicity of chromium is attributed primarily to the hexavalent form. In humans and experimental animals, gastrointestinal absorption of inorganic salts of chromium III is low (from 0.5% to 3%). However, organic complexes of chromium III are more readily absorbed (approximately 10% to 25%). The spleen and kidneys of rats were shown to have the highest concentration of chromium when chromium chloride intravenous doses (Hopkins, 1965) or chromic chloride in drinking water (Mackenzie et al., 1958) were administered. (USEPA, 1985; Casarett and Doull, 1986).

Doses of 0.5 to 1.5 grams of potassium dichromate have been fatal in humans. The estimated LD50 (the lowest dose other than the LD50 of substance introduced by any route other than inhalation which has been reported to have caused death in animals or humans) in children is 26 mg/kg (NIOSH, 1983). Compounds of chromium III have low toxicity in humans and animals. Rat studies by Mackenzie et al. (1985) and Schroeder et al. (1965) in which exposure occurred in drinking water showed no significant changes in health effects (USEPA, 1985).

The USEPA (1991) has recommended an oral reference dose (RfD) for chromium III (insoluble salt form) of 1x100 mg/kg/day based on a chronic feeding study by Ivankovic and Preussman (1975) in which rats exposed to 5% chromium (III) oxide (Cr2O3) in the diet 5 days/week for 600 feedings (1468 mg Cr/kg/day) showed no toxicity. No LOAEL was determined. An inhalation RfD of 5.71x10-7 mg/kg/day was determined by the USEPA (1991) based on a human inhalation study in which exposure to the LOAEL of 0.002 mg Cr(VI)/m3 as chromic acid resulted in nasal mucosal atrophy (Lindberg and Hedenstierna, 1983). Uncertainty factors of 1000 and 300, respectively, were applied in determining the RfDs.

Copper

Copper is an essential nutrient; however, it is toxic to humans at high levels. Copper usually causes gastrointestinal irritation following acute exposure and anemia following chronic exposures. Exposure to metallic copper dust by inhalation can cause a short-term illness similar to metal fume fever that is characterized by chills, fever, aching muscles, dryness of the mouth and throat, and headache. Exposure to copper fumes can produce upper respiratory tract irritation, a metallic or sweet taste, nausea, metal fume fever and sometimes discoloration of skin and hair.

Individuals exposed to dusts and mists of copper salts may exhibit congestion of nasal mucous membranes, sometimes congestion of the pharynx, and occasionally ulceration with perforation of the nasal septum. If sufficient concentrations of copper salts reach the gastrointestinal tract, they act as irritants and can produce salivation, nausea, vomiting, gastritis and diarrhea. The elimination of ingested ionic copper by vomiting and diarrhea generally protects the patient from more serious systemic toxic effects, which can include hemolysis, hepatic necrosis, gastrointestinal bleeding, oliguria, azotemia, hemoglobinuria, hematuria, proteinuria, hypotension, tachycardia, convulsions and death. Chronic exposure may result in anemia. Copper salts act as skin irritants upon dermal exposure, producing an itching eczema. Conjuctivitis or even ulceration and turbidity of the cornea may result from the direct contact of ionic copper with the eye (Clement Associates, 1985).

Copper appears to increase the mutagenic activity of triose reductase and ascorbic acid in bacterial test systems. However, copper itself does not appear to have mutagenic or teratogenic effects in animals or humans (Clement Associates, 1985). The USEPA (1991) has classified copper in Group D - Not Classified based on inadequate animal data from assays of copper compounds, equivocal mutagenicity data and lack of any human data. The USEPA (1991a) has not recommended an oral reference dose (RfD) for copper based on the Drinking Water Criteria Document conclusion that toxicity data were inadequate for calculation of an RfD.

1,4-Dichlorobenzene

1,3-Dichlorobenzene is a solid used as an air deodorant and as an insecticide. EPA (1987) reports that 100% of an oral dose and 60% of an inhalation dose are absorbed when exposure persists for longer than one to three hours (Astrand 1975, Dallas et al. 1983). The principal toxic effects of this compound on humans and experimental animals from acute and longer-term exposure include central nervous system depression, blood dyscrasias, and lung, kidney, and liver damage (EPA 1985, Riley et al. 1980). In humans, pigmentation and allergic dermatitis have been reported after dermal contact (EPA 1987). Chromosome breaks also have been observed in exposed humans (EPA 1987). 1,4-Dichlorobenzene was found to cause renal adenocarcinomas in male rats and carcinomas and adenocarcinomas of the liver in female mice in a 103-week gavage study (NTP 1986).

EPA classified 1,3-dichlorobenzene in Group B2 - Probable Human Carcinogen based on adequate evidence of carcinogenicity in animals (EPA 1989). An oral cancer potency factor of 2.4×10^{-2} $(mg/kg/day)^{-1}$ has been reported by EPA (1989) based on the development of liver tumors in mice (NTP 1986). EPA (1987) also derived an oral reference dose (RfD) for 1,4-dichlorobenzene of 0.1 mg/kg/day based on the NTP (1986) rat study in which a no-observed-adverse effect level (NOAEL) of 150 mg/kg/day for renal lesions was identified. An uncertainty factor of 1,000 was used to derive the RfD. This RfD was used to develop a lifetime health advisory for 1,4-dichlorobenzene. EPA (1989) developed an inhalation RfD of 7.0×10^{-1} mg/m^3 based on the Riley et al. (1980) study in which rats exposed to 75 ppm (454.6 mg/m^3) for 76 weeks exhibited liver and kidney effects. An uncertainty factor of 100 was used to derive the RfD.

Dichlorodiphenyltrichloroethane (DDT)

DDT, a chlorinated ethane derivative of the organochlorine insecticides, has been widely used in the past for agricultural purposes and in malaria control. DDT, as with other chlorinated insecticides was banned due to its persistence in the environment and tendency to accumulate in biologic and nonbiologic media. DDT is poorly absorbed after dermal exposure especially when applied in the powder or crystalline form and is slowly and incompletely absorbed from the gastrointestinal tract. However, DDT is readily absorbed by the lungs. DDT and its degradation product DDD are lipophilic toxicants which distribute and concentrate in adipose tissue where they may remain for years.

Symptoms of acute and subacute exposures to high doses of DDT in humans and experimental animals included paresthesia of the tongue, lips and face, apprehension, hypersusceptibility to stimuli, irritability, dizziness, disturbed equilibrium, tremor and tonic and clonic convulsions. Motor unrest and fine tremors associated with voluntary movements progress to coarse tremors without interruption in moderate to severe poisoning. Symptoms appear several hours after large doses, and in animals poisoned with fatal doses death occurs in 24 to 72 hours. Chronic oral toxicity exposures to experimental animals resulted in tremors, increased mortality and increased liver, kidney and spleen weights with degenerative changes occurring in the liver. No clinical or laboratory evidence of injury to man from occupational (repeated) exposures to DDT has been reported although the amount stored in body fat was higher than that found in the general population. Although there have been no reports of teratogenic effects from DDT, with the possible exception of ringtail in rats (Ottoboni 1969), DDT has consistently resulted in decreased fertility in mice (Keplingler et al. 1968, McLachlan and Dixon 1972, Schmidt 1973); however, conflicting results have been reported in rats (Fitzhugh and Nelson 1947, Fitzhugh 1948, Treon and Cleveland 1955, Clement and Okey 1974, Jonsson et al. 1975, Ware and Good 1967 and Dubey et al. 1971) and dogs (Deichmann et al. 1971, Deichmann and MacDonald 1971 and Ottoboni et al. 1977). (USEPA 1980, 1984, Klaassen et al. 1986 and Clayton and Clayton 1981).

Although no evidence for the carcinogenicity of DDT exists for humans, extensive accounts of carcinogenicity in a number of experimental animal species have been reported. (USEPA 1980, 1984, Klaassen et al. 1986 and Clayton and Clayton 1981). The USEPA (1991) has recommended an oral reference dose for DDT of 5x10-4 mg/kg/day based on a rat study in which exposure to 1 ppm in the diet for 27 weeks (0.05 mg/kg/day) resulted in liver lesions. Also, DDT has been classified by the USEPA (1991) as a Group B2 Carcinogen and it has recommended an oral and inhalation slope factor of 3.4x10-1 (mg/kg/day)-1 based on several rat and mouse dietary studies in which liver cancers were observed.

Diethyl Phthtalate

Diethyl phthalate is toxic via ingestion and inhalation exposure and is an irritant to the eyes and mucous membranes (Sax and Lewis 1987).

The Carcinogen Assessment Group (CAG) has classified diethyl phthalate in Group D - Not Classified due to inadequate evidence of carcinogenicity in animals (USEPA, 1991). The USEPA (1991) has derived an oral reference dose of 0.8 mg/kg/day for diethyl phthalate based on a

chronic study in which rates exposed to 1% in the diet for 16 weeks (750 mg/kg/day) showed reduced terminal body weight.

Dimethyl Phthalate

Dimethyl phthalate is absorbed into the body via oral and inhalation exposure (Sittig, 1985). Following inhalation exposure, dimethyl phthalate was observed to be irritating to mucous membranes, and may cause central nervous system depression after ingestion (Merck, 1989). If sufficient exposure occurs, dimethyl phthalate may produce vomiting, diarrhea, coughing, conjunctivitis, paralysis and coma (USEPA, 1991).

Dimethyl phthalate has not been classified (Group D) with respect to carcinogenicity by the USEPA (1991) due to inadequate evidence of carcinogenicity in animals. The USEPA (1991a) has recommended an chronic and subchronic oral RfD for dimethyl phthalate of 1.0×10^0 mg/kg/day based on a study in which rats were fed a diet of 1000 mg/kg/day for 23 years resulted in minor effects on growth and some nephritic involvement (USEPA, 1987). An uncertainty factor of 100 was applied in determining the RfD.

Di-n-Butyl Phthalate

Di-n-butyl phthalate is readily absorbed following oral and inhalation exposure (USEPA 1980). Reduced fetal weight, increased numbers of resorptions, and dose-related musculoskeletal abnormalities have been observed among fetuses from rats and mice exposed to very high doses of di-n-butylphthalate during gestation (Shiota and Nishimura 1982).

Di-n-butyl phthalate has not been classified (Group D) with respect to carcinogenicity by the USEPA (1991) due to inadequate evidence of carcinogenicity in animals. The USEPA (1991) has calculated an oral reference dose (RfD) for di-n-butyl phthalate of 1 x 10-1 mg/kg/day based on a subchronic to chronic oral bioassay in rats in which mortality was observed after exposures of 600 mg/kg/day (1.25% of the diet for 52 weeks - LOAEL) (Smith 1953). An uncertainty factor of 1000 was used to derive the RfD.

Di-n-Octyl Phthalate

Di-n-octyl phthalate is not particularly toxic to humans. It is a severe eye and a mild skin irritant in rabbits (NIOSH 1985, NTP/IRLG 1982, USEPA 1980). In a teratogenic study by Singh et al. (1972), rats were administered 5 and 10 ml/kg of di-n-octyl phthalate intraperitoneally on days 5, 10 and 15 of gestation. Such doses for di-n-octyl phthalate were chosen due to its low acute toxicity. Upon examination of the offspring, dose-related developmental abnormalities and fetotoxic effects were observed (USEPA, 1980). USEPA (1991a) has recommended an oral reference dose of 2x10-2 mg/kg/day based on a study by Piekacz (1971) in which rats fed 175 mg/kg/day di-n-octyl phthalate in the diet for 7-12 months developed elevated kidney and liver weights. This value is currently under review by the RfC/RfD Work Group.

1,2-Dichloroethane

Data on the toxicokinetics of 1,2-dichloroethane in humans are limited, but data from animal studies suggest that the chemical is rapidly absorbed following oral and inhalation exposure and after dermal contact with the liquid form of the compound (USEPA 1985).

The effects of acute high-concentration inhalation exposure observed in humans include irritation of mucous membranes, irritation of the respiratory tract and central nervous system depression (USEPA 1985). In some instances, death may occur as a result of respiratory and circulatory failure. Pathological post mortem examinations typically show congestion, degeneration, necrosis, and hemorrhagic lesions of most internal organs, including the liver, kidney, spleen, lungs and respiratory and gastrointestinal tracts (USEPA 1985). Adverse effects caused by lower exposures were generally associated with the gastrointestinal and nervous systems. Available data suggest that 1,2-dichloroethane does not adversely affect reproductive or developmental processes in experimental animals except at maternally toxic levels (USEPA 1985). Repeated exposure to 1,2-dichloroethane vapor in the work place has been reported to result in anorexia, nausea, vomiting, weakness and fatigue, nervousness, epigastric pain, irritation of the respiratory tract and eyes, and gastrointestinal, liver and gallbladder disease (USEPA 1984, 1985). Chronic studies in animals also have revealed toxic effects following inhalation exposure, including degeneration of the liver (USEPA 1985). In long-term oral bioassays sponsored by the National Cancer Institute (NCI 1978), increased incidences of squamous-cell carcinomas of the forestomach, mammary gland adenocarcinomas and hemangiosarcomas have been observed in rats exposed to 1,2-dichloroethane. Pulmonary adenomas, mammary adenocarcinomas, and uterine endometrial tumors have also been observed in mice exposed to this chemical.

The USEPA (1991) has classified 1,2-dichloroethane in Group B2 - Probable Human Carcinogen based on inadequate evidence of carcinogenicity from human studies and sufficient evidence of carcinogenicity from animal studies. The USEPA (1991) has derived an oral slope factor of 9.1x10-2 (mg/kg/day)-1 for 1,2-dichloroethane based on the incidences of hemangiosarcomas in Osborne-Mendel male rats observed in the NCI (1978) gavage study. The USEPA (1991) also has reported an inhalation slope factor of 9.1x10-2 (mg/kg/day)-1 based on oral data from the NCI (1978) bioassay.

1,1-Dichloroethene

1,1-Dichloroethene is a central nervous system depressant. Chronic low-level exposure to this substance may result in neurotoxicity, nephrotoxicity, hepatotoxicity, and cardiac arrhythmia. Inhalation or oral exposure of rats and rabbits has produced fetotoxicity and minor skeletal abnormalities, but one at doses maternally toxic. 1,1-Dichloroethene caused kidney tumors and leukemia in a single study of mice exposed by inhalation, but the results of other studies were equivocal or negative (EPA 1987).

EPA (1988) has classified 1,1-dichloroethene as a Group C agent (Possible Human Carcinogen) and has developed inhalation and oral cancer potency factors of 1.2 $(mg/kg/day)^{-1}$ and 0.6 $(mg/kg/day)^{-1}$, respectively. EPA (1988) has also developed an oral RfD for 1,1-dichloroethene of 9×10^{-3} mg/kg/day.

Dieldrin

Dieldrin is absorbed into the blood from the gastrointestinal tract, through the skin or by inhalation. The percentage of an oral dose absorbed has not been accurately determined because of the enterohepatic circulation system. The absorption of dieldrin in humans is expected to resemble that observed in animals. In humans, 20 to 50% of aldrin (rapid epoxidation of aldrin to dieldrin occurs) is retained, and about 8% of a dermal dose of aldrin/dieldrin is absorbed (5 days). Dieldrin is distributed to the liver and other tissues and is accumulated in body fat (USEPA 1987).

The acute toxicity of dieldrin has been extensively summarized by Hodge et al. (1967) and Jager (1970). Toxicity is highest via the intravenous route, followed by the oral and then dermal routes. For most species, the acute oral toxic dose is between 20 and 70 mg/kg (Hodge et al. 1967). Jager (1970) described the symptoms resulting from human oral or dermal exposure that occur from 20 minutes to 24 hours as headache, dizziness, nausea, general malaise, vomiting, followed by muscle twitching, myoclonic jerks and convulsions. Death may result from anoxemia. Changes in the electroencephalogram (EEG) usually result after insecticide exposure and generally return to normal after dicontinuance (Hoogendam et al. 1962). (USEPA 1987).

Dieldrin is a probable human carcinogen classified in Group B2 under USEPA's proposed guidelines, since there is sufficient evidence for carcinogenicity in animal studies in the absence of adequate evidence in humans (USEPA 1991). USEPA (1991) has determined oral and inhalation slope factors of 16.0 (mg/kg/day)-1, respectively. USEPA (1991) has also derived an oral reference dose (Rfd) of 5 x 10-5 (mg/kg/day) based on a study by Walker et al. (1969) in which liver lesions occurred in rats fed dieldrin in the diet.

2,4-Dimethylphenol

2,4-Dimethylphenol is a naturally occurring chemical with commercial use as a feedstock or in the manufacture of products for industry and agriculture. A paucity of data exists on the chronic oral toxicity, mutagenicity, teratogenicity and carcinogenicity of the chemical. 2,4-Dimethylphenol appears to be a topical cocarcinogen, but its role as a primary cancer producing agent is uncertain. (Sittig, 1985).

An oral reference dose (RfD) of 2x10-2 has been recommended by the USEPA (1991) based on a study by American Biogenics (1989) in which mice orally gavaged with 50 mg/kg/day of 2,4-dimethylphenol for 90 days exhibited neurological signs and hematological changes. An uncertainty factor of 3000 was applied in determining the RfD.

Endosulfan

Endosulfan is a chlorinated cyclodiene insecticide whose technical form is a mixture of two isomers. It is a broadly active contact and stomach poison and has found wide application in agriculture, forestry and ornamental plant growing (Buchel and Holmwood, 1983; Sittig, 1985).

Exposure to endosulfan can occur via several routes including inhalation, ingestion, skin absorption and eye contact (Sittig, 1985). According to Clarke et al. (1981) it is rapidly absorbed

from the gastrointestinal tract. As dust, it is probably only moderately toxic by inhalation, but in solution, especially in alcohol or aromatic solvents like xylene, it is considered toxic by ingestion and by percutaneous absorption (Gosselin et al., 1976). At least some of the agent ingested by mammals is excereted in an unchanged form (Buchel and Holmwood, 1983).

Human acute exposure to endosulfan results primarily in central nervous system toxicity causing such symptoms as hyperirritability, convulsions and/or coma. Ingestion, inhalation and skin absorption will induce headache, dizziness, nausea and vomiting. Occasional epileptiform convulsions of grand mal or petit mal type have occurred in workers from skin absorption (CHRIS Hazardous Chemical Data, 1984).

The USEPA (1991) has recommended an oral reference dose for endosulfan of 5x10-5 mg/kg/day. It should be noted that endosulfan I was evaluated as endosulfan in this risk assessment due to a lack of toxicity factors for endosulfan I.

Endrin

Endrin is known to be absorbed by the skin, lungs and gut although the rates of absorption have not been adequately documented. (USEPA 1979,1980, Clement Associates 1985). Humans do not tend to store endrin in significant quantities. No residues were detected in plasma, adipose tissue, or urine of workers occupationally exposed to endrin (Hayes and Curley 1968).

Endrin is classified as "very highly hazardous", meaning that contact with very small amounts of the substance may result in severe systemic toxicity or death (Thompson 1971). Symptoms of acute endrin poisoning in mammals clearly indicate that endrin is a neurotoxicant. Symptoms in man include headache, dizziness, nausea, vomiting, mental confusion, abdominal disturbance, muscle twitching and epileptiform convulsions which may occur suddenly and without warning (Brooks 1974 and Coble 1967). (USEPA 1980). Several studies exist in the literature which show that endrin can cause chromosome damage (Grant 1973).

No malgnancies attributed to endrin have been reported. Therefore, the USEPA has classified endrin in Group D - Not Classified. The USEPA (1991) has derived an oral reference dose for endrin of 3x10-4 mg/kg/day based on a study in which dogs were fed 1 ppm in the diet for more than 2 years (0.025 mg/kg/day) with resultant convulsions and liver lesions as the effects of concern.

Ethylbenzene

Ethylbenzene, once absorbed via inhalation, is distributed throughout the body in rats (Chin et al. 1980). Following inhalation exposure the highest levels of ethylbenzene in rats were detected in the kidney, lung, adipose tissue, digestive tract and liver.

In humans, short-term inhalation exposure to ethylbenzene can result in sleepiness, fatigue, headache, and mild eye and respiratory irritation (USEPA, 1987). Eye irritation has also been observed in experimental animals exposed to ethylbenzene (USEPA 1987). According to Dutkiewicz and Tyras (1967) aqueous ethylbenzene absorption occured at a rate of 118 ug/cm2/hour through human hand skin. Liver and kidney effects were observed in rats orally

exposed to ethylbenzene for six months (Wolf et al. 1956). Rat inhalation studies employing concentrations up to 1,000 ppm did not elicit maternal toxicity, embryotoxicity, fetotoxicity or teratogenicity (Hardin et al. 1981).

The Carcinogen Assessment Group (CAG) has classified ethylbenzene in Group D - Not Classified as to human carcinogenicity based on a lack of animal bioassays and human studies (USEPA 1991). The USEPA (1991) derived an oral reference dose of 0.1 mg/kg/day for ethylbenzene based on a subchronic oral bioassay in which hepatotoxic and nephrotoxic effects were observed in rats exposed to a LOAEL of 291 mg/kg/day, 5 days per week for 182 days (Wolf et al. 1956). An uncertainty factor of 1000 was used to derive this reference dose. USEPA (1991) has also derived an inhalation reference dose of 0.29 mg/kg/day based on rat and rabbit developmental toxicity studies (Andrew et al. 1981, Hardin et al. 1981).

Fluorene

Fluorene, a common component of coal tar (Merck, 1989), is a member of the polycyclic aromatic hydrocarbons. Oral and inhalation routes of exposure to fluorene are significant for humans (USEPA, 1980).

Rats fed a diet containing fluorene resulted in various types of tumors in both control and exposed groups (Morris et al., 1960). Of the 11 animals examined, the incidence of non-neoplastic reactions were reported by organ as follows: (otestomach (acanthosis, metaplasia), 5 animals; small intestine (epithelial ulcer, acute), 1 animal; kidney (squamous metaplasia of pelvis), 7 animals; uterus (squamous metaplasia), 1 animal; and liver (cirrhosis), 3 animals.

Fluorene has not been classified (Group D) with respect to carcinogenicity by the USEPA (1991) based on no human data and inadequate data from animal bioassays. The USEPA (1991) has recommended an oral RfD for fluorene of 4 x 10-2 mg/kg/day based on a study in which rats were fed a diet containing fluorene for 13 weeks resulting in decreased red blood cells, packed cell volume and hemoglobin (USEPA, 1989). An uncertainty factor of 3000 was applied in determining the RfD.

Heptachlor

Heptachlor is a man-made organochlorine insecticide used in the 1960s and 1970s by farmers to kill insects in seed grains and crops and by exterminators to kill termites (ASTDR, 1987). Since 1978, heptachlor uses have gradually declined. In 1987, the only U.S. manufacturer stopped selling the product. Heptachlor can still be used by licensed applicators.

Heptachlor is persistent in the environment. Half-lives in soil for heptachlor and heptachlor oxide (a heptachlor degradation product) are 2 and 14 years, respectively (ASTDR, 1987). Both compounds bioaccumulate in aquatic organisms.

Data suggest that heptachlor is readily absorbed from the gastrointestinal tract and may be absorbed through the skin. Based on animal data, the liver appears to be the most sensitive target organ of heptachlor toxicity. Increased liver weights and increased levels of serum enzymes

indicative of liver damage have been observed following acute and chronic exposures (ASTDR, 1987).

Neurotoxicity has also been observed in animals exposed to heptachlor. Effects include hyperactivity tremors and convulsions and ataxia. In human case studies, neurotoxic effects have included irritability, salvation, lethargy, dizziness, labored breathing, muscle tremors, and convulsions (ATSDR, 1987). Exposures in these studies were to technical-grade chlordane which usually contains 10 percent heptachlor.

Other toxic effects observed in animals following chronic oral exposure include renal toxicity, adrenotoxicity, and hematologic effects. Humans exposed to mixtures of heptachlor with chlordane have demonstrated leukemia as well as various forms of anemia (ASTDR, 1987).

Epidemiologic data is inadequate to infer a casual association between heptachlor and increased incidence of cancer in humans. Chronic oral exposure in rats and mice, however, has induced and increased liver tumor incidence (ATSDR, 1987). As a result, the USEPA has classified heptachlor/heptachlor epoxide as a Class B2 probable human carcinogen.

Heptachlor has tested negative in a variety of assays designed to test the mutagenicity of the compound. It has been postulated that the carcinogenicity of heptachlor is a result of an indirect effect upon cellular DNA (ASTDR, 1987).

Heptachlor Epoxide (Epoxyheptachlor)

Heptachlor epoxide is a degradation product of heptachlor; it is not commercially available in the U.S. (IRAC, 1979b; Verschueren, 1983). Heptachlor is an insecticide used to control termites and pests in field crops. Heptachlor epoxide is slightly water soluble (U.S. EPA, 1985).

Symptoms of acute intoxication of heptachlor epoxide include tremors, convulsions, paralysis and hypothermia (Hrdina, et al., 1974; Yamaguchi et al., 1980). Yamaguchi, et al., 1979 and 1989) suggested a mechanism for heptachlor epoxide's effect on the CNS indicating that it acts to promote neurotransmitter release from the brain.

Sublethal dietary doses in rats of heptachlor epoxide resulted in changes in liver enzyme levels and moderate liver damage (U.S. EPA, 1985). Chronic dietary exposure to heptachlor epoxide resulted in liver changes, including liver enlargement, increased size of cells, cirrhosis and heptic vein thrombosis (U.S. EPA, 1985).

No data on teratogenicity of heptachlor epoxide are available from the literature searched. (U.S. EPA, 1985).

Heptachlor epoxide has been categorized by USEPA (1991) in Group B2-Probable Human Carcinogen and has developed an oral and inhalation step factor of 9.1 (mg/kg/day)-1 based on a mouse study in which 0-10 ppm of heptachlor epoxide in the diet for 2 years resulted in liver tumors (Davis, 1965 and Velsicol Chemical Corp., 1973). USEPA (1991) has also recommended an oral RfD of 1.3 x 10-5 mg/kg/day for heptachlor epoxide.

Iron

Iron is an essential metal although toxicological considerations are important in terms of accidental acute exposures and chronic iron toxicity or iron overload. Approximately 2 - 15% of iron is absorbed from the gastrointestinal tract and of this amount only 0.01% per day is eliminated. In total, the body contains about 3 - 5 grams of iron.

Severe acute iron toxicity in children occurs after ingestion of 0.5 grams of iron or 2.5 grams of ferrous sulfate. It is important to note here that iron toxicity relates to the amount of elemental iron and for salt forms, iron content must be calculated. Toxic symptoms from iron ingestion occur in phases; lethargy, restlessness, hematemesis, abdominal pain, and bloody vomitus and diarrhea occur early on. Necrosis of the gastrointestinal tract mucosa is a result of the direct corrosive effect of iron on tissue. Later, shock, metabolic acidosis, cyanosis and fever may occur followed within several days by hepatic necrosis and renal failure. Oral ingestion of about 30 grams of a soluble ferric salt is potentially fatal; ingestion of more than 30 mg/kg may require hospitalization. Chronic inhalation of iron - containing dusts and fumes, especially iron oxide may produce siderosis, a type of benign pneumoconiosis which does not progress to fibrosis. A report of autopsies of hematite (iron ore) workers noted an increase in lung cancer as well as tuberculosis and interstitial fibrosis (Boyd et al. 1970). The significance of these findings is uncertain since exposure to a mixture of substances occurred which included other carcinogens (cigarettes, silica and other minerals, radioactive materials and in some cases polycyclic aromatic hydrocarbons) (McLaughlin 1956). (Klaassen et al. 1986, Clement Associates 1985).

Intravenous injection of high concentrations of soluble salts has been reported to cause teratogenic effects including hydrocephalus and anophthalmia in various animal species.

Iron dextran solutions have been reported to cause injection site sarcomas in experimental animals.

Lead

Absorption of lead from the gastrointestinal tract is principally influenced by age and nutritional status, and is estimated to range between 5 and 15 percent in adults and approximately 40 to 50 percent in children (Goyer, 1986; USEPA, 1986a). Absorption of lead from the lungs is governed by the rate of pulmonary deposition which for lead is approximately 30 to 50 percent of the inhaled quantity, with absorption of essentially all of the lead deposited in the lower respiratory tract (USEPA, 1986a; ATSDR, 1988). A considerable fraction of the inhaled lead is absorbed through the stomach.

Acute lead toxicity is not as common as chronic toxicity due to lead's relatively insoluble nature and accumulation potential in the body (Carson, et al., 1986). However, symptoms of acute toxicity include fatigue, sleep disturbance, constipation, followed by anemia and neuritis (Stokinger, 1981). Occasionally, acute lead encephalopathy (brain disorder) occurs, producing an array of serious and life-threatening neurological effects (Tsuchiya, 1977).

Lead is an inhibitor of many enzymes in different organs and organ systems, leading to wide-ranging chronic toxic effects. The major effects of occupational and environmental

exposures are peripheral neuropathy (a noninflammatory lesion of the peripheral nervous system), anemia and gastrointestinal and reproductive effects (Goyer, 1986). The critical organ for lead toxicity is the hematopoietic (blood forming) system (Carson et al., 1986). In red blood cells, lead interferes with heme synthesis at several enzymatic steps, resulting in decreased blood cell survival and potentially leading to anemia and pallor (Carson et al., 1986). Irreversible kidney effects have been associated with chronic, long-term exposure to lead (Goyer, 1971). Chronic high-level lead exposure has been associated with central nervous system (CNS) impairment (Goyer, 1986). Subclinical effects of lead toxicity are manifested in a variety of neuropsychologic behaviors, including hyperactivity, poor classroom behavior and even small decrements in IQ scores in children (Goyer, 1986). Threshold levels that will not produce cognitive or motor neurological deficits in children (Goyer, 1986) have not yet been established with certainty.

No clear evidence of an association between lead and congenital malformations is available.

The data on human carcinogenicity are considered inadequate, since available studies failed to quantify exposures, did not correct for the presence of other toxic metals (e.g., cadmium, arsenic) or smoking. The USEPA has evaluated the available carcinogenicity data and has classified lead as a Probable Human Carcinogen - Group B2 (USEPA, 1991). The Cancer Assessment Group (CAG) of the USEPA recommends that due to a lack of understanding and perhaps unique nature of the pharmacokinetics of lead, a numerical estimate of the slope factor should not be used (USEPA, 1991). In the meantime, they recommend that media-specific concentrations of lead be compared with the background concentrations (500-1000 ppm), the National Ambient Air Quality Standard (1.5 ug/l), and the proposed water quality standard (5 ug/l) (USEPA, 1989b). If an exceedance does not occur, then lead does not need to be included in the risk assessment. If an exceedance does occur, there are no defensible RfD values existing with which to characterize potential health risk.

Manganese

Manganese is an essential element present in all living organisms. Daily manganese intake ranges from 2 to 9 mg with less than 5% being absorbed in the gastrointestinal tract. Industrial toxicity from inhalation exposure can also occur.

Acute toxic effects associated with manganese compounds can occur in humans under unusual, and unusually intense exposure scenarios, such as intentional or accidental poisoning, which differs qualitatively and quantitatively from facility stack emission scenarios. Manganese pneumonitis is attributed to manganese following inhalation of its dusts, generally manganese dioxide, in mining or manufacturing facilities. Workers exposed to high concentrations of manganese dust show a 30 times greater than normal incidence of respiratory disease. Pathologic changes in this typically reversible condition include epithelial necrosis followed by mononuclear proliferation. Manganese, among other metals, may also cause a reversible condition known as metal fume fever following exposure to freshly formed metal oxide fumes of respirable particle size. Symptoms include fever, chills, sweating, nausea and coughing. Chronic effects occurring from inhalation exposure, generally over a period of 2 years, include central nevous system (CNS) toxicity. Those who develop manganese poisoning (manganism) exhibit a psychiatric disorder characterized by irritability, difficulty in walking, speech disturbances and cmpulsive behavior which may include running, fighting and/or singing. If the condition persists, a

masklike face, retropulsion or propulsion and a Parkinson-like syndrome develop (Mena et al. 1967). The major effect of manganese encephalopathy has been classified as severe selective damage to the subthalamic nucleus and pallidum (Pentschew et al. 1963). In addition to these CNS effects, liver cirrhosis often occurs. Victims of chronic manganese toxicity tend to recover slowly, even after cessation of exposure (Klaassen et al. 1986).

The USEPA (1991) has recommended an oral reference dose (RfD) for manganese of 1 x 10-1 mg/kg/day based on human chronic ingestion data from numerous studies. The NOAEL of 1.4 x 10-1 mg/kg/day for chronic human consumption is based on a composite of the three studies (WHO 1973, NRC 1989 and Schroeder et al. 1966). No LOAEL has been found. An uncertainty factor of 1 was applied when calculating the RfD. An inhalation reference dose of 1.1 x 10-4 mg/kg/day is based on human occupational exposure to 9.7 x 10-1 mg/m3 with respiratory symptoms and pychomotor disturbances as the effects of concern (Roels et al. 1987). An inhalation uncertainty factor of 900 was applied to calculate the RfD. (USEPA 1991a). A risk assessment for manganese is currently under review by an USEPA work group. The USEPA (1991) has classified manganese in Group D - Not Classifiable as to human carcinogenicity based on inadequate existing studies.

Mercury

In humans, elemental and inorganic mercury compounds are efficiently absorbed following inhalation exposure but poorly absorbed following oral exposure (USEPA 1984). The occupational exposure of workers to elemental mercury vapors (0.1 to 0.2 mg/m3) has been associated with mental disturbances, tremors and gingivitis (USEPA 1984). The central nervous system is a major target for organic mercury compounds. Adverse effects in humans from exposure to organic mercury compounds have included the destruction of cortical cerebral neurons, damage to Purkinje cells and lesions of the cerebellum. Clinical symptoms following exposure to organic mercury compounds have included paresthesia, loss of sensation in extremities, ataxia, and hearing and visual impairment (WHO, 1976). A primary target organ for inorganic mercurials is the kidney. Human exposure to inorganic mercury compounds has been associated with anuria, polyuria, proteinuria and renal lesions (Hammond and Beliles 1980). Embryotoxic and teratogenic effects, including malformations of the skeletal and genitourinary systems, have been observed in animals exposed to organic mercury (USEPA 1984). Both organic and inorganic compounds are reported to be genotoxic in eukaryotic systems (Leonard et al. 1984).

The USEPA (1991a) has categorized mercury in Group D - Not Classified. This classification applies to those agents for which there is inadequate evidence of carcinogenicity in animals. The USEPA's Health Effects Assessment Summary Tables (1991) recommends an oral reference dose (RfD) for inorganic mercury of 3x10-4 mg/kg/day based on several oral studies in which kidney effects were the effects of concern in exposed rats. USEPA (1991a) has also determined an inhalation reference dose of 8.6x10-5 mg/kg/day based on several human occupational studies in which neurotoxicity was the effect of concern. Throughout this assessment, it will be assumed that all exposures in soil and water are to inorganic mercury. For exposure to biota or sediments under reducing (oxygen deficient) conditions, exposure to the more toxic organic species could become significant.

Methoxychlor

Methoxychlor, an organochlorine insecticide, is chemically similar to DDT. Exposure to methoxychlor can occur via inhalation and ingestion (Sittig, 1985).

Methoxychlor was orally administered to human volunteers at levels of 0.5, 1.0, and 2.0 mg/kg/day for 6 weeks (Stein, 1968). No adverse effects were reported for routine biochemical and hematologic parameters such as SGOT, SGPT or alkaline phosphate. Inhalation or ingestion of methoxychlor has been reported to cause generalized depression.

Goldman et al., (1986) investigated the subchronic effects on the rat reproductive system. No effect was observed on uterin weight, serum progesterone levels or corpora lutea maintenance. Long-term exposure to methoxychlor reduced fertility and induced fetotoxicity. Two additional studies conluded that methoxychlor may produce reproductive effects in the form of reduced fertility index, reduced litter size and reduced viability index.

Methoxychlor has not been classified (Group D) with respect to carcinogenicity by the USEPA (1991) due to no human data and inconclusive animal data. The USEPA (1991) has recommended a chronic and subchronic oral RfD for methoxychlor in which a teratology study for rabbits resulted in an excessive loss of litters (Kincaid Enterprises, 1986). An uncertainty factor of 1000 was applied in determining the RfD.

4,4'-Methylene Bis(2-Chloroaniline)

4,4'-Methylene Bis(2-Chloroaniline) (MOCA) is a solid used as a curing agent for polyurethanes and epoxy resins. It is a suspected human carcinogen. Studies of workers exposed to MOCA revealed inconsistent results. A British study revealed higher incidence of urinary bladder tumors among manufacturing workers. A U.S. study did not detect any increased incidence of tumors (IARC). The TLV-TWA for MOCA is 0.02 ppm, 0.22 mg/cu m, skin. ACGIH notes there is potential for skin abosorption for this suspected carcinogen. Skin contact should be avoided.

Animal studies have induced hemangiosarcomas, hepatomas, lung adenomas and adenocarcinomas (IARC), mesotheliomas, pulmonary adenomas, mammary adenocarcinomas, Zymbal gland carcinomas, and hepatocellular carcinormas (Kommineni, 1979), when introduced in the diet. When administered by gavage, MOCA produced transitional cell carcinomas of the urinary bladder (Stula, 1977). Subcutaneous injection induced liver and lung carcinomas in experimental animals (IARC). It also exhibits the general toxic properties of aromatic amines, namely, cyanosis, methemoglobinemia, and kidney irritation (ACGIH, 1980).

Methylene Chloride

Methylene chloride is absorbed following oral and inhalation exposure. The amount of airborne methylene chloride absorbed following inhalation exposure increases in direct proportion to its concentration in inspired air, the duration of exposure, and physical activity. Dermal absorption occurs slowly (USEPA 1985). Because of methylene chloride's high solubility in water and lipids, it is probably distributed throughout all body fluids and tissues.

Acute human exposure to methylene chloride may result in irritation of eyes and skin, central nervous system depression; elevated carboxyhemoglobin levels; and circulatory disorders that may be fatal. Chronic exposure of animals can produce renal and hepatic toxicity (USEPA 1985). There have been several chronic studies in which methylene chloride was administered to experimental animals either orally or by inhalation. The inhalation studies provided clear evidence of a treatment-related increase in combined hepatocellular carcinomas and neoplastic nodules provided in drinking water studies in experimental animals (USEPA 1985).

The USEPA (1991a) has classified methylene chloride in Group B2 - Probable Human Carcinogen and has developed an oral slope factor of 7.5 x 10-3 (mg/kg/day)-1 based on the results of the National Toxicology Program (NTP 1986) inhalation bioassay and on an ingestion bioassay conducted by the National Coffee Association (NCA 1983). In the NTP (1986) study, mice developed hepatocellular adenomas or carcinomas after inhalation exposure to methylene chloride. In the NCA (1983) study, mice receiving methylene chloride in their drinking water showed increases in the incidence of hepatocellular cancer and neoplastic nodules. An inhalation slope factor of 1.65 x 10-2 (mg/kg/day)-1 was also developed based on the results of the NTP (1986) inhalation bioassay. An oral reference dose (RfD) of 0.06 mg/kg/day has been developed by USEPA (1991) based on a 2 year rat drinking water bioassay (NCA 1982) that identified (LOAELs) of 53 and 58 mg/kg/day for liver toxicity in male and female rats, respectively. An inhalation reference dose of 0.9 mg/kg/day was determined by Nitschke et al. (1988) based on a study in which rats inhaled 200 ppm methylene chloride 6 hours/day, 5 days/week for 2 years (USEPA 1991a). The effects of concern are uncertain (USEPA 1991a). An uncertainty factor of 100 was used to derive both RfDs.

4-Methyl-2-Pentanone (Methyl Isobutyl Ketone)

Limited data about the toxicity of 4-methyl-2-pentanone exist in the literature. Workers exposed to airborne concentrations of 4-methyl-2-pentanone ranging from 200 to 2,000 mg/m^3 have experienced headaches, nausea, vomiting, and eye irritation studies (MacEwan et al. 1971) monkeys, dogs and rats were exposed continuously to 100 ppm of 4-methyl-2-pentanone for 90 days. Both dogs and monkeys showed no adverse effects to the agent after exposure; however, some inflammation of the kidneys was noted in monkeys. All exposed rats showed proximal tubular degeneration and increased kidney and liver weights. In a study by the EPA (1986), rats administered 1,000 mg/kg/day of 4-methyl-2-pentanone orally for 13 weeks exhibited nephrotoxicity with increased kidney and liver weights.

No studies on the mutagenicity, reproductive toxicity or teratogenicity of 4-methyl-2-pentanone were found in the literature (Clement Associates 1985). This chemical has not been reviewed by the EPA (1988) for evidence of human carcinogenic potential. The EPA (1985) derived an oral reference dose (RfD) for 4-methyl-2-pentanone of 5.0×10^{-2} mg/kg/day based on a chronic study in which rats exposed by gavage to 50 mg/kg/day for 13 weeks developed liver and kidney effects. The EPA (1985) has also recommended an inhalation reference ^Xu, 4-methyl-2-pentanone of 2×10^{-2} mg/kg/day based on chronic exposure of rats to 23.3 mg/kg/day (50 ppm), 6 hours per day, 5 days per week for 90 days with resultant liver and kidney effects.

2-Methylphenol (o-Cresol)

Experimental evidence indicates that 2-methylphenol is absorbed following ingestion, inhalation (EPA 1984), and dermal exposure (ACGIH 1986). Humans exposed to 2- methylphenol for an unspecified time developed nasopharyngeal irritation (Uzhdavini et al. 1972). Effects following acute exposure to 2-methylphenol include muscular weakness; gastroenteric disturbances; severe depression; edema of the lungs; injury to the eyes, skin, kidneys, liver, pancreas, spleen, and vascular system; collapse; and death (Deichmann and Keplinger 1981, NIOSH 1978). Effects in rats following subchronic exposure to 2-ethylphenol include increased mortality; reduction in body weight; increased kidney-to-body weight ratios; and CNS effects such as salivation, rapid respiration, lethargy, ataxia, coma, dyspnea, tremor, and convulsions (EPA, 1987); hematopoietic effects; and sclerosis of the lungs (Uzhdavani et al. 1972). Lysol, a cresol- containing solution, products extensive hemolysis, erosion of blood vessels, kidney tubular damage, liver necrosis, and death in humans following intravaginal application to induce abortion (Vance 1945, Presley and Brown 1956).

USEPA (1991) has classified 2-methylphenol in Group C - Possible Human Carcinogen. USEPA (1991) has also derived an oral reference dose of 0.05 mg/kg/day based on decreased body weights and neurotoxicity in rats administered 2-methylphenol by gavage (EPA 1987). A uncertainty factor of 1,000 was used to derive the RfD.

4-Methylphenol (p-Cresol)

Experimental evidence indicates that 4-methylphenol is absorbed following ingestion and inhalation (EPA 1984) and also after dermal exposure (NIOSH 1978). Effects following acute exposure to 4-methylphenol include muscular weakness; gastroenteric disturbances; severe depression; edema of the lungs; injury to the eyes, skin, kidneys, liver, pancreas, spleen, and vascular system; collapse and death (Deichmann and Keplinger 1981, NIOSH 1978). Effects in rats following subchronic exposure to 4-methylphenol include increased mortality; reduction in body weight; increased kidney-to-body weight and liver-to-body weight ratios; and CNS effects such as salivation, rapid respiration, lethargy, ataxia, coma, dyspnea, tremors, diarrhea, and convulsions (EPA 1986, 1987). Lysol, cresol-containing solution produces extensive hemolysis, erosion of blood vessels, kidney tubular damage, liver necrosis, and death in humans following intravaginal application to induce abortion (Vance, 1945, Presley and Brown 1956).

USEPA (1991) has classified 4-methylphenol in Group C - Possible Human Carcinogen due to limited evidence of carcinogenicity in animals in the absence of data on humans.

USEPA (1991) has also derived an oral reference dose of 0.05 mg/kg/day based on decreased body weights and neurotoxicity in rats administered 4-methylphenol by gavage (EPA 1986, 1987). An uncertainty factor of 1,000 was used to derive the RfD.

Nickel

Nickel compounds can be absorbed following inhalation, ingestion or dermal exposure. The amount absorbed depends on the dose administered and on the chemical and physical form of the particular nickel compound (USEPA, 1986). Adverse effects associated witha acute exposure

in animals have included depressed weight gain, altered hematological parameters, and increased iron deposition in the blood, heart, liver and testes (USEPA, 1987). Chronic or subchronic exposures of experimental animals to nickel salts have been associated with reduced weight gain, degenerative lesions of the male reproductive tract, asthema, nasal septal perforations, rhinitis, sinusitis, hyperglycemia, decreased prolactin levels, decreased iodine uptake, and vasoconstriction of the coronary vessels. Dermal exposure of humans to nickel produces allergic contact dermatitis (USEPA, 1986). Teratogenic and fetotoxic effects have been observed in the offspring of exposed animals (USEPA, 1986). Inhalation exposure of experimental animals to nickel carbonyl or nickel subsulfide induces pulmonary tumors (USEPA, 1986). Several nickel salts cause localized tumors when administered by subcutaneous injection or implantation. Epidemiological evidence indicates that inhalation of nickel refinery dust and nickel subsulfide is associated with cancers of the nasal cavity, lung, larynx, kidney and prostate (USEPA, 1986).

Nickel refinery dust and nickel subsulfide by inhalation are both categorized in Group A - Human Carcinogens. These materials have inhalation slope factors of 0.84 (mg/kg/day)-1 and 1.7 (mg/kg/day)-1, respectively (USEPA 1991, 1991a). The USEPA (1990) derived an oral reference dose (RfD) for nickel (soluble salt form) of 2x10-2 mg/kg/day based on a chronic study by Ambrose et al.(1976) in which rats administered 1000 ppm nickel from nickel sulfate in the diet for two years (50 mg/kg/day - LOAEL) experienced reduced body and organ weights. An uncertainty factor of 100 was used in the calculation of the RfD.

Nitrobenzene

Nitrobenzene is extremely toxic to humans by all exposure routes (Gosselin 1984). Since it is highly fat-soluble, skin absorption may occur at a rate of up to 2 mg/m2/hr (NRC 1982). Systemic effects, however, may be delayed a few hours after acute exposure (Gosselin 1984). Toxic effects in humans include respiratory and liver dysfunction and hematological and neurological complications (Arena 1974, International Labour Office 1983, Lareng et al. 1974). Human inhalation exposure to nitrobenzene has been associated with headache, vertigo, nausea, vomiting, depressed respiration, disturbed vision, stupor, coma and death from respiratory failure. Intense cyanosis of the skin often accompanies these effects (Arena 1974). In rabbit studies, changes in the bone marrow, liver, kidneys and lungs have been observed as a result of nitrobenzene exposure (Browning 1965). The administration of 0.18 g/kg nitrobenzene in rats induced central nervous system depression (Browning 1965). Conflicting evidence exists as to whether nitrobenzene is embryotoxic/teratogenic in rats; studies in rabbits lack evidence of such effects. Single oral doses of 50-450 mg/kg nitrobenzene in male rats resulted in hepatic necrosis and testicular lesions (Bond et al. 1981). Nitrobenzene is currently under review by the USEPA to determine human carcinogenic potential. The few reported cases of human nitrobenzene poisonings have provided only very limited data with which its effects in humans may be assessed (Lareng et al. 1974, Browning 1965). Based on a rat/mouse subchronic inhalation study by CIIT (Chemical Industry Institute of Toxicology) in 1984, in which hematologic, adrenal and hepatic effects were observed, an oral RfD of 5.0x10-4 mg/kg/day eand an inhalation RfD of 5.7x10-4 mg/kg/day were derived to protect against the adverse health effects of nitrobenzene (USEPA 1991, 1991a).

N-Nitrosodiphenylamine

N-Nitrosodiphenylamine is a member of a major class of chemical carcinogens known as the N-nitroso compounds which are derived from secondary amines or amides (Williams and Weisburger 1986). Little information on the absorption, distribution, excretion or metabolism of N-nitrosodiphenylamine exists in the literature. However, according to Tatsumi and Yamada (1982), under anaerobic conditions, N-nitrosodiphenylamine was reduced to 1,1-diphenylhydrazine by guinea pig liver preparations.

N-nitrosodiphenylamine was not observed to be mutagenic in V79 Chinese hamster cells by Kuroki et al. (1977). The mutagenicity of N-nitrosodiphenylamine to Salmonella typhimurium TA98 was demonstrated only when a comutagen, norharman, was added (Wakabayashi et al. 1982). Fischer rat embryo cells exposed to doses up to 1 ug/ml and Syrian hamster embryo cells exposed to doses up to 10 ug/ml did not become morphologically transformed by N-nitrosodiphenylamine (IARC 1972-1985).

Epithelial hyperplasia of the urinary bladder mucosa was observed in male and female B6C3F1 mice fed varying doses of N-nitrosodiphenylamine for varying periods of time (IARC 1972-1985). Male and female Fischer-344 rats fed 1000 or 4000 mg/kg N-nitrosodiphenylamine in the diet for 100 weeks showed significant increases in transitional cell carcinomas of the urinary bladder and fibromas of the subcutis and skin at high dose levels (IARC 1972-1985). USEPA weight of evidence has classified N-nitrosodiphenylamine in Group B2 - Probable Human Carcinogen based on sufficient evidence of carcinogenicity in animals and inadequate evidence in humans (USEPA 1991). An oral slope factor of 4.9x10-3 (mg/kg/day)-1 has also been determined by the USEPA (1989) based on a 700-day rat dietary study in which toxic effects to the urinary bladder were observed (NCI 1979).

N-Nitrosodi-n-Propylamine

N-nitrosodi-n-propylamine (NDPA) is a yellow liquid used almost exclusively as laboratory research chemical (ATSDR, 1988). It is a purely synthetic substance with no known natural sources. NDPA can occur as an impurity in some dinitroniline pesticides and during the manufacture of some rubber products.

NDPA is not expected to be a persistent chemical in the environment. Significant fate processes include photolysis and volatilization.

There is little to no information on the systemic toxicity of NDPA to humans. Similarly, very little data exists for animals. Intentional oral and accidental inhalation exposures in humans have resulted in hemorrhage, necrotic, and cirrhotic damage in the liver as well as diffuse internal bleeding (ATSDR, 1988). Based on these findings and inference from other nitrosamines, hepatic and hemorrhage effects are likely to be characteristic of NDPA toxicity (ATSDR, 1987).

Due to its low molecular weight, NDPA is expected to readily cross the placenta. Data based on subsequent teratogenic or reproductive effects is limited. Some data suggests that it may be fetotoxic without being teratogenic (ATSDR, 1988).

The lack of data on system toxicity occurs partly as a result of the intense interest focused on the carcinogenicity of NDPA. Although there is no human data, NDPA has been demonstrated to be carcinogenic in several animal species. Increased tumor incidence has been observed at multiple sites, including the liver, nasal cavity, and esophagus, in rats, mice, and monkeys (ASTDR, 1988). The latency period between exposure and tumor development is as short as 20-30 weeks. The USEPA (1991) has classified NDPA in Class B2-Probable Human Carcinogen.

An oral slope factor of 7.0 (mg/kg/day)-1 was developed by USEPA, (1991) based on liver tumors in rats administered DPNA orally (Druckrey et al., 1967). DPNA in the drinking water was provided to BD rats of unspecified sex. The administered doses were 4, 8, 15, and 30 mg/kg/day given to treatment sized of 16, 16, 15, and 1, respectively. The total of 48 rats were treated for their lifetime. Of 48 treated animals, 45 were reported to have developed liver carcinomas. Tumor induction time occurred in dose-related manner. Other tumors observed included those of the esophagus and tongue.

Pentachlorophenol

Pentachlorophenol is currently used as an insecticide, herbicide and fungicide. It is readily absorbed through the skin (Klaassen et al. 1986) and does not metabolize rapidly (USEPA 1985). Pentachlorophenol is distributed throughout the body, accumulating in the liver, kidneys, brain, spleen and fat (Braun et al. 1977, Grimm et al. 1981, Jakobson and Yllner 1971).

Human exposure to pentachlorophenol resulted in local irritation, systemic effects and in a limited number of people, an allergic response (Dow Chemical Co. 1969). Pentachlorophenol poisoning is characterized by profuse sweating, often accompanied by fever, weight loss and gastrointestinal complaints (Gordon 1956, Bergner et al. 1965 and Chapman and Robson 1965). In cases of fatal poisoning, liver and kidney involvement have been reported (Robson et al. 1969 and Armstrong et al. 1969). During chronic exposure, kidney function may be depressed, although it is at least partially reversible (Begley et al. 1977). According to a study by Klemmer et al. (1980) occupational exposure to pentachlorophenol resulted in an increased incidence of low-grade infections or inflammation. Several animal studies have concluded that oral and dermal exposure to pentachlorophenol did not result in teratogenic or reproductive toxicity.

The USEPA (1991) has classified pentachlorophenol in Group B2 - Probable Human Carcinogen. An oral slope factor of 0.12 (mg/kg/day)-1 was recommended based on a 2-year dietary study in which mice developed liver, adrenal and circulatory system cancers. The USEPA (1991) has also derived an oral reference dose (RfD) for pentachlorophenol of 3.0x10-2 mg/kg/day based on a study by Schwetz et al. (1978) in which rats exposed to 3 mg/kg/day by oral gavage for 22-24 months were evaluated for renal and hepatic pathology.

Phenol

Phenol is readily absorbed through the gut, by inhalation, and percutaneously (USEPA, 1980). Signs of acute phenol toxicity in humans and experimental animals are central nervous system depression, collapse, coma, cardiac arrest, and death. Acutely toxic doses can also cause extensive necrosis at the site of exposure (eyes, skin, oropharynx) (USEPA, 1980). In experimental animals subchronic oral and inhalation studies suggest that kidney, pulmonary, myocardial, and

liver damage are associated with exposure, although many of these studies were poorly designed (USEPA, 1980, 1984). Phenol exhibited tumor-promoting activity in the mouse skin painting system following initiation with 9,10-dimethyl-1,2-benzanthracene (DMBA) or benzo[a]pyrene (B[a]P), and it exhibited cutaneous carcinogenic activity in a sensitive mouse strain when applied at concentrations that produced repeated skin damage (USEPA, 1980).

The USEPA (1991) has recommended an oral reference dose for phenol of 6 x 10-1 mg/kg/day based on a rat study in which exposure to 60 mg/kg/day by gavage during organogenesis resulted in reduced fetal body weight.

Polychlorinated Biphenyls (PCBs)

The efficiencies with which PCBs are absorbed following exposure via the inhalation and ingestion routes have been reported to equal greater than 50 and 90 percent, respectively (USEPA 1988). However, absorption by these routes is actually likely to be significantly less than 100 percent. This is particularly so in the case of PCBs which may be tightly bound to particles such as soil and may therefore be to a large degree biologically unavailable. Absorption efficiency via the dermal route has been variously reported to equal 5 to 10 percent (USEPA 1986) or, more recently, up to 59 percent (USEPA 1988). The principal tissues and organs to which PCBs are distributed following absorption have been reported to include liver, muscle, fat and skin (USEPA 1988). PCBs are persistent in the body, but excretion does occur (USEPA 1985).

Acute toxicity effects associated with PCBs can occur in humans under unusual and unusually intense exposure scenarios such as intentional or accidental poisoning. Numerous investigations of the toxic properties of acute exposure to PCBs have been undertaken, involving such bioassay organisms as mice, rats, hamsters, rabbits and monkeys (USEPA 1985). Toxicity appears to decline with increasing chlorination. Effects in animals have included weight loss, elevation of liver weight (hepatomegaly) and fat content, depressed body temperature and appetite, thymus gland hemorrhage, kidney enlargement, splenic and lymph node regression, increased thyroid gland activity, alterations in cholesterol and fatty acid synthesis and other effects. PCBs have been rated as moderately toxic in humans, having a probable oral LD50 value in the range of 0.5-5.0 g/kg (Gosselin et al. 1984).

A significant body of literature pertains to the carcinogenicity of PCBs in humans and laboratory animals. Numerous human studies have reported statistically significant increases primarily in malignant melanomas and liver and biliary cancers (gastrointestinal cancers). Norback and Weltman (1985) conducted an oral study in Sprague-Dawley rats in which exposure to 100 ppm Aroclor 1260 in the diet for 16 months, followed by a 50 ppm diet for 8 months, then a basal diet for 5 months resulted in a 91% incidence of hepatocellular carcinoma in females. An additional 4% of the females had developed neoplastic nodules. Males showed a much lower incidence of cancer. USEPA (1991) has classified PCBs in Group B2 - Probable Human Carcinogen based on the occurrence of hepatocellular carcinomas in three strains of rats and two strains of mice and inadequate yet suggestive evidence of excess risk of liver cancer in humans by ingestion, inhalation or dermal contact exposure routes. The oral slope factor for PCBs recommended by USEPA (1991) is 7.7 (mg/kg/day)-1 which is based on the Norback and Weltman (1985) study.

Polycyclic Aromatic Hydrocarbons (PAHs)

PAHs occur in the environment as complex mixtures of many components with varying noncarcinogenic and carcinogenic potencies. Only a few components of these mixtures have been adequately characterized, and only limited information is available on the relative potencies of different compounds. The PAHs are often separated into two categories for the purposes of risk assessment: carcinogenic and noncarcinogenic PAHs.

PAH absorption following oral or inhalation exposure is inferred from the demonstrated toxicity of PAHs following ingestion or inhalation (USEPA 1984a). It has been suggested that simultaneous exposure to carcinogenic PAHs such as benzo[a]pyrene and particulate matter can increase the effective dose of the compound (ATSDR 1987). PAHs are also absorbed following dermal exposure (Kao et al. 1985). Acute effects from direct contact with PAHs and related materials are limited primarily to phototoxicity, with the principal effect being dermatitis (NIOSH 1977). PAHs have also been shown to cause cytotoxicity in rapidly proliferating cells throughout the body (Santodonato et al. 1981). As a consequence of this, the hematopoietic system, lymphoid system and testes are frequent targets. Some of the noncarcinogenic PAHs have been shown to cause systemic toxicity but these effects are generally seen only at rather high doses (Santodonato et al. 1981). Slight morphological changes in the livers and kidneys of rats have been reported following oral exposure to acenaphthene. Oral administration of naphthalene to rabbits and rats has resulted in cataract formation (USEPA 1984b). Nonneoplastic lesions are seen in animals exposed to the more potent carcinogenic PAHs only after exposure to levels well above those required to elicit a carcinogenic response. Carcinogenic PAHs are believed to induce tumors both at the site of application and systemically. Neal and Rigdon (1967) reported that the oral administration of benzo[a]pyrene led to forestomach tumors in mice. Thyssen et al. (1981) observed respiratory tract tumors in hamsters exposed to benzo[a]pyrene.

Benzo[a]pyrene is representative of the carcinogenic PAHs and is classified by the USEPA as B2 - Probable Human Carcinogen, based on sufficient evidence of carcinogenicity from animal studies and inadequate evidence from human carcinogenicity studies (USEPA 1991a). The USEPA (1991a) has recommended slope factors of 11.5 (mg/kg/day)-1 for oral exposure and 6.1 (mg/kg/day)-1 for inhalation exposure to benzo[a]pyrene based on the study by Neal and Rigdon (1967) and Thyssen et al. (1981), respectively.

Of the noncarcinogenic PAHs, anthracene, fluoranthrene, naphthalene and pyrene (acenaphthene and fluorene are profiled separately) are the only compounds that have had any systematic toxicity assessment for noncarcinogenic effects. The USEPA (1991) has recommended oral reference doses (RfDs) for these compounds. For anthracene, USEPA (1991) has derived an oral RfD of 0.3 mg/kg/day based its a subchronic study in mice in which there was no LOAEL and therefore no observed effects. An uncertainty factor of 3000 was applied in determining the RfD. For fluoranthrene, a study by USEPA (1991) has derived an oral RfD of 4 x 10-2 mg/kg/day based on a subchronic study in which nephropathy, increased liver weights, hematological alterations and clinical effects were observed at a LOAEL of 250 mg/kg/day in orally exposed mice. Again, an uncertainty factor of 3000 was used to derive the RfD. An oral RfD of 4 x 10-3 mg/kg/day for naphthalene has been derived by USEPA (1991a) from a rat dietary study in which exposure to 10 - 20 mg/day, 6 days/week for 700 days (41 mg/kg/day) resulted in ocular and internal lesions. An uncertainty factor of 10000 was used to determine the RfD. For

pyrene, an oral RfD of 3 x 10-2 mg/kg/day was determined by USEPA (1991) based on an oral subchronic mouse study in which the LOAEL (125 mg/kg/day) resulted in renal tubular pathology and decreased kidney weights. An uncertainty factor of 3000 was used to derive the RfD. Anthracene and naphthalene have been classified in Group D - Not Classified as to carcinogenicity due to inadequate evidence of carcinogenicity in animals.

Pyrene

Pyrene occurs as pale-yellow plates and monoclinic prismatic tablets with a slight blue fluorescence (National Library of Medicine, 1982). Pyrene is virtually insoluble in water (Davis, et.al., 1947, May et al., 1978) and occurs ubiquitously in products of incomplete combustion; it also occurs in fossil fuels. It is found in relatively high quantities in coal tar (Windholz, 1976).

No estimated value for the half-life of pyrene in the aquatic media could be located in the available literature; however, photolysis of dissolved pyrene in the aquatic phase and adsorption onto particulate matter with subsequent sedimentation may be the important processes. Biodegradation of particulate-sorbed pyrene is likely to be an important removal process from sediment in the aquatic environment (U.S. EPA, 1974).

Silver

Silver may enter the body via the respiratory trace, the gastrointestinal tract, mucous or broken skin and possibly by absorption through intact skin. Up to 10% of a single oral dose of silver is absorbed. Absorption from nonintact skin is believed less than 1%. The amount of silver administered, its chemical form, and the route by which it is administered affect the body (Furchner et al., 1968). It is retained by all body tissues. The primary sites of deposition of deposition in persons never having taken silver for therapeutic reasons are the liver, skin, lungs, adrenals, muscle, pancreas, kidney, heart and spleen. Silver is also deposited in blood vessel walls, testes, pituitary, nasal mucous membrane, maxillary antra, trachea and bronchi (Sax, 1963).

The toxicity of silver compounds is generally considered to be moderate, although large doses of silver compounds may have serious effects (USEPA, 1980). Generalized argyria, localized argyria and argyosis (argyria of the eye) are the most common effects of chromic and less frequently subacute human exposure to silver or silver compounds. Generalized argyria is characterized by a slate gray pigmentation of the skin, hair, and internal organs caused by deposition of silver in the tissues.

Silver has been classified by USEPA (1991) in Group D - Not Classifiable as to human carcinogenicity. Animal data showed that in ten toxicologic experiments on chronic ingestion of drinking water by rats (one study included rabbits), containing 50-20,000 ug/l ionic silver, no effects were observed in rats ingesting silver at 200 ug/l, and no significant toxic effects were observed at a dose level below 400 ug/l. Initial physiological effects were suggested at doses of 400 to 500 ug/l of silver (USEPA, 1989).

The USEPA (1991) has derived on oral reference dose for silver of 3.0×10^{-3} mg/kg/day based on numerous studies of exposure-induced argyria.

Styrene

Four beagle dogs/sex were gavaged with doses of 0, 200, 400 or 600 mg styrene/kg bw/day in peanut oil for 560 days. No adverse effects were observed for dogs administered styrene at 200 mg/kg/day. In the higher dose groups, increased numbers of Heinz bodies in the RBCs, decreased packed cell volume, and sporadic decreases in hemoglobin and RBC counts were observed. In addition, increased iron deposits and elevated numbers of Heinz bodies were found in the livers. Marked individual variations in blood cell parameters were noted for animals at the same dose level.

Low-tern studies (120 weeks) in rats and mice (Ponomarkov and Tomatix, 1978) showed liver, kidney, and stomach lesions for rats (dosed weekly with styrene at 500 mg/kg) and no significant effects for mice (dosed weekly with 300 mg/kg). Rats receiving an average daily oral dose of 95 mg styrene/kg bw for 185 days showed no adverse effects, while those receiving 285 to 475 mg/kg/day showed reduced growth and increased liver and kidney weights (Wolf, et. al., 1956).

Styrene has been classified by EPA in Group B - Probable Human Carcinogen based upon sufficient evidence of carcinogenicity in animals. Oral and inhalation slope factors of 3.0×10^{-2} and 2.0×10^{-3} respectively, have been recommended by the EPA (HEAST, Fourth Quarter, 1990). the chronic oral reference dose is 2.0×10^{-1} (IRIS, Dec., 1990) and the subchronic oral reference dose is 2.0 (HEAST, Fourth Quarter, 1990).

1,1,2,2-Tetrachloroethane

In humans, the absorption factor for a single inhaled dose of 1,1,2,2-tetrachloroethane vapor is 97% (USEPA 1984). Gastrointestinal absorption of this chemical was inferred from studies in which an increased incidence of liver tumors was reported in mice exposed to 1,1,2,2-tetrachloroethane in the diet (USEPA 1984). The effects associated with occupational exposure to 1,1,2,2-tetrachloroethane by inhalation or dermal routes are primarily neurological and include tremors, headache, numbness, excessive perspiration and anorexia (USEPA 1984). In experimental animals, subchronic inhalation exposure to 1,1,2,2-tetrachloroethane is associated with liver effects, decreased hemoglobin content of red blood cells, decreased hemacrit and fluctuations in white blood cell count (Schmidt et al., 1972, Navrotskiy et al., 1971, Horiuchi et al. 1962). 1,1,2,2-tetrachloroethane has been shown to induce liver carcinomas when administered orally to mice (NCI 1978).

The EPA (1988) classified 1,1,2,2-tetrachloroethane in Group C -- Possible Human Carcinogen based on increased incidence of hepatocellular carcinomas in mice. The EPA (1988) developed an oral cancer potency factor of 0.2 $(mg/kg/day)^{-1}$ based on the study conducted by NCI (1978) in which a highly significant dose-related increase in the incidence of hepatocellular carcinomas was observed in both male and female mice. An inhalation cancer potency factor of 0.2 $(mg/kg/day)^{-1}$ was also calculated from these data (USEPA 1988).

Tetrachloroethene

Tetrachloroethene is absorbed following inhalation (IARC 1979) and oral (USEPA 1985a,b) exposure. Tetrachloroethene vapors and liquid also can be absorbed through the skin (USEPA

1985a,b). The principal toxic effects of tetrachloroethene in humans and animals following acute and longer-term exposures include central nervous system (CNS) depression and fatty infiltration of the liver and kidney with concomitant changes in serum enzyme activity levels indicative of tissue damage (USEPA 1985a,b). Humans exposed to doses of between 100 and 1500 mg/m3 develop central nervous system effects such as lassitude and signs of inebriation at the lower dose levels and immediate acute effects at the higher dose levels (Rowe et al. 1952, Stewart et al. 1961, 1970, 1974, Hake and Stewart 1977). The offspring of female rats and mice exposed to high concentrations of tetrachloroethene for 7 hours daily on days 6-15 of gestation developed toxic effects, including a decrease in fetal body weight in mice and a small but significant increase in fetal resorption in rats (Schwetz et al. 1975). Mice also exhibited developmental effects, including subcutaneous edema and delayed ossification of skull bones and sternebrae (Schwetz et al. 1975). In a National Cancer Institute bioassay (NCI 1977), a high incidence of hepatocellular carcinoma was observed in both sexes of B6C3F1 mice administered tetrachloroethene in corn oil by gavage 5 days per week for 78 weeks. Increased incidences of mononuclear cell leukemia and renal adenomas and carcinomas (combined) have also been observed in long term bioassays in which rats were exposed to tetrachloroethene by inhalation (NTP 1986).

USEPA (1991a) classified tetrachloroethene in Group B2 - Probable Human Carcinogen. USEPA (1991a) has derived an oral slope factor for tetrachloroethene of 5.1 x 10-2 (mg/kg/day)-1 based on a mouse study in which the liver was the tumor site. The USEPA (1991a) has also derived an inhalation slope factor of 1.8 x 10-3 (mg/kg/day)-1 based on rat and mouse studies in which leukemia and liver cancer were the resultant effects of exposure. USEPA (1991) has recommended an oral RfD for tetrachloroethene based on a study by Buben and O'Flaherty (1985). In this study, liver weight/body weight ratios were significantly increased in mice and rats treated with 71 mg/kg/day (LOAEL) tetrachloroethene in corn oil but not in animals treated with 14 mg/kg/day. Using this NOAEL of 14 mg/kg/day, an oral RfD of 1 x 10-2 mg/kg/day was derived. An uncertainty factor of 1000 was applied to derive the RfD.

Toluene

Toluene is a homolog of benzene which contains a single methyl group. For humans, the most common routes of exposure to toluene are through the respiratory tract and the skin. Studies in humans show that toluene is absorbed rapidly through the respiratory tract (Astrand et al. 1972, 1975) and also through the skin. Dutkiewicz and Tyras (1968a, 1968b) measured the absorption rate of liquid toluene into human skin at 23 mg/cm2/hr. Absorption from the gastrointestinal tract is believed to occur slower than in the respiratory tract, but based on animal studies appears to be fairly complete.

The following toxicological information has been summarized from USEPA (1985) and USEPA (1983). Since human exposure (experimental, occupational or intentional abuse) to toluene typically occurs through inhalation, the effect of greatest concern is dysfunction of the central nervous system (CNS). Acute exposure to toluene at approximately 200 ppm (754 mg/m3) for eight hours caused fatigue, headache, nausea, muscle weakness, confusion, impaired coordination and paresthesia of the skin (von Oettingen et al. 1942a, 1942b, Carpenter et al. 1944). Chronic exposure at levels of approximately 200 to 800 ppm have been associated primarily with CNS (von Oettingen et al. 1942a, 1942b) and possibly peripheral nervous system effects (Matsushita

et al. 1975, Seppalainen et al. 1978). Workers exposed to 200 to 800 ppm for "many years" developed disturbances in memory, thinking, psychomotor skills, visual accuracy and sensorimotor speed (Munchinger 1964). Chronic abusers of toluene were reported to display toxicities indicative of cerebral and cerebellar dysfunction such as ataxia, tremors, equilibrium disorders, speech, vision and hearing impairment and impaired memory and coordination (Knox and Nelson 1966, Boor and Hartig 1977, Sasa et al. 1978). Hepatomegaly and hepatic and renal function changes have been observed in chronic abusers of toluene and occupationally exposed workers (Greenberg et al. 1942, Grabski 1961, Kroeger et al. 1980, Moss et al. 1980).

Since human exposure in the workplace occurs often and because toluene is an abused substance, many reports on human exposure exist in the literature. None of these reports, however, associates toluene exposure with an increased rate or incidence of cancer. Likewise, carcinogenicity due to toluene exposure has not been observed in animal studies (USEPA 1984). USEPA (1991) has derived an oral reference dose of 2 x 10-1 mg/kg/day based on a study by NTP (1989) in which changes in liver and kidney weights were observed at a LOAEL of 446 mg/kg/day in rats orally gavaged 5 days/week for 13 weeks. An inhalation reference dose of 0.6 mg/kg/day has been derived by USEPA (1991a) based on human exposure to 151 mg/m3 with resultant CNS effects and eye and nose irritation (Anderson et al. 1983). Uncertainty factors of 1000 and 100 have been applied when deriving reference doses, respectively.

1,1,1-Trichloroethane

The most notable toxic effects of 1,1,1-trichloroethane in humans are central nervous system depression, including anesthesia at very high concentrations and impairment of coordination, equilibrium, and judgement at lower concentra- tions (350 ppm and above). 1,1,1-Trichloroethane may also exert cardiovascular effects, including increased premature ventricular contractions, decreased blood pressure and sensitization to epinephrine-induced arrhythmia and adverse effects on the lungs, liver and kidneys. Irritation of the skin and mucous membranes resulting from exposure to 1,1,1-trichloroethane has also been reported (Clement Associates 1985).

There is evidence that 1,1,1-trichloroethane is mutagenic in Salmonella typhimurium and causes transformation in cultured rat embryo cells (USEPA 1980). 1,1,1-Trichloroethane was retested for carcinogenicity because in a previous study by NCI (1977) early lethality precluded an assessment of carcinogenicity. Preliminary results indicated that 1,1,1-trichloroethane increased the incidence of combined hepatocellular carcinomas and adenomas in female mice when administered by gavage (NTP 1984). The USEPA (1991) has determined an oral reference dose (RfD) for 1,1,1-trichloroethane of 9.0x10-2 mg/kg/day based on a study by Torkelson et al. (1958) in which no effects were observed in guinea pigs exposed via inhalation to 500 ppm (2730 mg/m3 or 90 mg/kg/day) 1,1,1-trichloroethane for 7 hours per day, 5 days per week for 6 months. The USEPA (1991) has developed an inhalation reference dose for 1,1,1-trichloroethane of 3.0x10-1 mg/kg/day also based on a guinea pig study by Torkelson et al. (1958) in which no effects were observed at exposures of 500 ppm (2730 mg/m3 or 304 mg/kg/day) 7 hours per day, 5 days per week, for 6 months. A LOAEL of 120 mg/kg/day was determined by Adams et al. (1950) to retard growth in guinea pigs exposed via inhalation for 2-3 months. An uncertainty factor of 1000 was used to derive the reference doses.

Trichloroethene

Trichloroethene has caused carcinogenic responses in rats exposed by gavage and in mice exposed by inhalation. Trichloroethene also acts as a central nervous system depressant following both acute and chronic exposure by both ingestion and inhalation pathways. Occupational exposure to concentrated trichloroethene vapors may result in dermatitis.

USEPA (1991a) has classified trichloroethene in Group B2 - Probable Human Carcinogen. Slope factors of 1.1 x 10-2 (mg/kg/day)-1 and 1.7 x 10-2 (mg/kg/day)-1 have been developed for oral and inhalation exposures, respectively based on numerous mouse studies in which liver and lung cancers were observed (Maltoni et al. 1986, Fukuda et al. 1983, NCI 1976 and NTP 1983).

Vanadium

Absorption of vanadium compounds through the lungs is estimated to be about 25 percent for soluble compounds, while ingested vanadium is more poorly absorbed, on the order of 2-3 percent (ICRP, 1960). The largest storage compartment in the body is fat, followed by, and to a lesser extent, bone and teeth (Goyer, 1986). The toxicity of vanadium increases with increasing valence, with the pentavalent (+5) form being the most toxic (NAS, 1977).

Acute exposure of human volunteers to 0.1 to 1 mg/m3 of vanadium pentoxide stimulates mucous secretions and coughing (Carson et al., 1986). A hypersensitivity reaction has been reported in individuals repeatedly exposed. Occupationally exposed individuals experienced respiratory tract irritation, dermal disorders, sneezing, sore throat, chest pain, and conjunctivitis (eye irritation) (Lagerkvist et al., 1986). Acute vanadium exposures in animals generally produce effects on the nervous system, hemorrhage, paralysis, and respiratory depression (Goyer, 1986). Chronic exposure to high concentrations of airborne vanadium is believed to lead to chronic bronchitis, chronic rhinitis (nasal inflammation), and pharyngitis (inflammation of the pharnyx) (Lagerkvist et al., 1986). The formation of allergy-like eczematous skin is associated with chronic respiratory exposures in humans and animals (NAS, 1977). Kiviluoto (1980) investigated radiographs and pulmonary function test results of exposed and unexposed workers and found that there was no difference between unexposed workers and those with long-term occupational exposure to vanadium. However, they did note that exposed workers complained more frequently of wheezing. In animals, fatty changes and partial necrosis of the liver was observed following long-term exposure to vanadium pentoxide, trioxide and chloride (Lagerkvist et al., 1986). There is no evidence of chronic oral toxicity (NAS, 1977).

Very little data is available on the reproductive and developmental effects of vanadium compounds. However, two reports have reported skeletal abnormalities in offspring of hamsters and mice injected with vanadate during mid-gestation (Carlton et al., 1982, Wide, 1984).

There is no evidence that vanadium compounds are mutagenic, nor are they considered to be carcinogenic (Lagerkvist et al., 1986). An oral reference dose for vanadium of 7 x 10-3 mg/kg/day has been recommended by the USEPA (1991a). This value is based on a rat study by Schroeder et al. (1970) in which exposure to 5 ppm (0.7 mg/kg/day) in drinking water for lifetime produced no observable effects (NOAEL). No uncertainty factor of 100 was used to determine the oral RfD.

Vinyl Chloride

Vinyl chloride is a gas that is easily liquified and usually handled as a liquid. It is the most important vinyl monomer and the nineteenth highest-volume chemical produced in the United States. Vinyl chloride is an extremely toxic and hazardous material by all avenues of exposure and is a recognized human carcinogen. It is slightly soluble in water and has an extremely high vapor pressure.

Due to the high vapor pressure, volatilization from aquatic and terrestrial systems is the most important transport process for the distribution of vinyl chloride throughout the environment (Clement Associates, Inc., 1985). Under most natural conditions, vinyl chloride should not remain upon release to an aquatic ecosystem. Half-lives in aquatic systems range from several minutes to a few hours. Photooxydation in the troposphere is the dominant environmental fate of vinyl chloride.

Vinyl chloride reacts rapidly with hydroxyl radicals in the air, forming hydrogen chloride or formal chloride. Formyl chloride, if formed, is reported to decompose at ambient temperatures, to carbon monoxide and hydrogen chloride with a half-life of about 20 minutes. As a result, vinyl chloride in the troposphere should be decomposed within a day or two of release (Callahan, et al, 1979). The hydrogen chloride formed is removed from the troposphere during precipitation (Clement Associates, 1985).

Based on the information found, it does not appear that oxidation, hydrolysis and biodegradation are important fate processes for vinyl chloride in aquatic environments. Equally sorption and bioaccumulation do not appear to be important transport processes. However, there is little information pertaining specifically to the rate of adsorption of vinyl chloride to particulate matter. Based on a low log octanol/water partition coefficient, (1.38), vinyl chloride typically travels rapidly through groundwater supplies. At the Fulton Terminals site, for instance, vinyl chloride was detected only in the groundwater, indicating infiltration through the subsoils.

Xylenes

The three xylene isomers, compounds having the same chemical constituents in a different configuration, have similar toxicological properties and are therefore discussed together. Data from animals and humans suggest that approximately 60 percent of an inhaled dose is absorbed (USEPA, 1985). Inference from metabolism and excretion studies suggests that absorption of orally administered xylenes is nearly complete. Dermal absorption is reported to be minor following exposure to xylenes vapor but may be significant following contact with the liquid (USEPA 1985).

In humans, acute inhalation exposures to relatively high concentrations of xylenes adversely affects the central nervous system and lungs and can irritate mucous membranes (USEPA 1987). Savolainen et al. (1980) observed that body balance and manual coordination were impaired in eight male students following inhalation exposure to m-xylene. However, tolerance to exposure developed during one work week. In experimental rats, long-term inhalation exposure to o-xylene resulted in hepatomegaly (Tatrai et al. 1981). Oral exposure to 200 mg/kg xylenes in the diet for up to six months was also associated with liver toxicity, specifically in the

development of intracellular vesicles (Bowers et al. 1982). Xylene appears to be fetotoxic and may increase the incidence of visceral and skeletal malformations in offspring of exposed experimental animals (Mirkova et al. 1983). There is suggestive evidence that xylenes are carcinogenic in experimental animals exposed by gavage (Maltoni et al. 1985).

The USEPA (1991a) has classified xylenes in Group D - Not Classifiable as to human carcinogenic potential due to inadequate evidence of carcinogenicity in animals. The USEPA (1991) has recommended an oral reference dose of 2 mg/kg/day. The USEPA's Health Effects Assessment document (1991a) has recommended an inhalation RfD for mixed xylenes of 0.09 mg/kg/day based on a human inhalation study by Hake et al. (1981) in which CNS effects and nose and throat irritation were observed from exposure to 20 ppm 7.5 hours/day for 5 days. The USEPA (1990) calculated an oral reference dose for mixed xylenes of 2 mg/kg/day based on an NTP (1986) study in which rats given a gavage dose of 250 mg/kg/day (NOAEL) for 5 days per week for 103 weeks did not exhibit either compound-related histopathical lesions or a significant increase in mortality while those given 500 mg/kg/day (FEL) showed hyperactivity, decreased body weight and increased mortality in males. An uncertainty factor of 100 was used to determine the RfDs.

Zinc

Zinc is absorbed in humans following oral exposure; however, insufficient data are available to evaluate absorption following inhalation exposure (USEPA 1984). Zinc is an essential trace element that is necessary for normal health and metabolism and therefore is nontoxic in trace quantities (Hammond and Beliles 1980). However, overexposure to zinc has been associated with a variety of adverse effects. Chronic and subchronic inhalation exposures of humans to zinc have been associated with gastrointestinal disturbances, dermatitis and metal fume fever, a condition characterized by fever, chills, coughing, dyspnea and muscle pain (USEPA 1984). Chronic oral exposure of humans to zinc may cause anemia and altered hematological parameters. Reduced body weights have been observed in studies in which rats were administered high levels of zinc in the diet. There is no evidence that zinc is teratogenic or carcinogenic (USEPA 1984).

Zinc is categorized in Group D - Not Classified (USEPA 1991a). This category applies to agents for which there is inadequate evidence of carcinogenicity. The USEPA's Health Effects Assessment document (1991a) has recommended an oral reference dose (RfD) of 0.2 mg/kg/day for zinc based on human therapeutic dosages of 2.14 mg/kg/day in which anemia was the observed effect of concern.

REFERENCES

Acenaphthene

Knobloch, K., et al, 1969. Acute and Subacute Toxicity of Acenaphthene and Acenaphthylene. Med. Pracy. 20:210.

Reshetyuk, A.L., E.I. Talakina and P.A. En'Yakova. 1970. Toxicological Evaluation of Acenaphthene and Acenaphthylene. Gig. Tr. Prof. Zabol. 14:46.

U.S. Environmental Protection Agency (USEPA). 1979. Health Effects Assessment for Acenaphthene. Prepared by the Office of Health and Environmental Assessment, Office of Research and Development, Cincinnati, Oh.

Sax, N. Irving 1984. Dangerous Properties of Industrial Chemicals. New York: Van Nostrand Reinhold Company.

U.S. Environmental Protection Agency (USEPA). 1991a. Health Effects Assessment Summary Tables (HEAST) - Annual. Office of Solid Waste and Emergency Response. Washington, D.C.

Aldrin

Agency for Toxic Substances and Disease Registry (ATSDR). 1987. Toxicological Profile for Aldrin/Dieldrin. USPHS, Atlanta, GA. Draft.

Beyermann, K. and Eckrich, W. 1973. Gas-chromatographische bestimmung von insecticid-spuren in luft. Z. Anal. Chem. 265:4-7.

Bragt et al. 1984. As cited in United States Environmental Protection Agency Special Data Call-in on Aldrin Termiticide, Data Packet on Metabolism, July 27, 1984.

Davis, L. and Fitzhugh, O.G. 1962. Tumorigenic potential of aldrin and dieldrin for mice. Toxicol. Appl. Pharmacol. 4:187-189.

Davis, L. 1965. Pathology report on mice fed dieldrin, aldrin, heptachlor, or heptachlor epoxide for two years. Internal FDA memorandum to Dr. A.J. Lehrman, July 19.

Deichmann, W.B. MacDonald, W.E., Blum, E., Bevilacqua, M., Radomski,J., Keplinger, M. and Balkus,M. 1970. Tumorigenicity of aldrin, diledrin and endrin in the albino rat. Ind. Med. Surg. 39:426-434.

Deichmann, W.B., MacDonald, W.E., Beasely, A.G., Cubid,D. 1971. Subnormal reproduction in beagle dogs induced by DDT and aldrin. Ind. Med. Surg. 40:10-20.

Deichmann, W.B., Keplinger, M., Sala,F. and Glass, E. 1967. Synergism among oral carcinogens in the simultaneous feeding of four tumorigens to rats. Toxicol. Appl. Pharmacol. 11:88-103.

Environmental Protection Agency (USEPA). 1991. Integrated Risk Information System (IRIS). Environmental Criteria and Assessment Office. Cincinnati, Ohio. June.

Epstein, S. 1975. The carcinogenicity of dieldrin. Part 1. Sci. Total Environ. 4:1-52.

Farb, R. Sanderson, T., Moore, B. and Hayes, A. 1973. Interaction: The effect of selected mycotoxins on the tissue distribution and retention of aldrin and dieldrin in the neonatal rat. Paper presented at the 8th Inter-America Conference on Toxicol. Occup. Med.

Feldmann, R. and Maibach, H. 1974. Percutaneous penetration of some pesticides and herbicides in man. Toxicol. Appl. Pharmacol. 28:126-132.

Fitzhugh, O., Nelson, A. and Quaife, M. 1964. Chronic oral toxicity of aldrin and dieldrin in rats and dogs. Food Cosmet. Toxicol. 2:551-562.

Good,E. and Ware, G. 1969. Effects of insecticides on reproduction in the laboratory mouse. IV. Endrin and dieldrin. Toxicol. Appl. Pharmacol. 14:201-203.

Hayes, W. 1982. Pesticides studied in man. The Williams and Wilkins Co., Baltimore, MD pp. 234-247.

Heath, D. and Vandekar, M. 1984. Toxicity and metabolism of dieldrin in rats. Br. J. Ind. Med. 21:269-279.

Hoogendam, I., Versteeg, J. and Devilieger, M. 1962. Electroencephalograms in insecticide toxicity. Arch. Environ. Health 4:92-100.

Hunter, C. and Robinson, J. 1967. Pharmacodynamics of dieldrin (HEOD). I. Ingestion by human subjects for 18 months. Arch. Environ. Health 15:614-626.

Hunter, C. and Robinson, J. 1969. Pharmacodynamics of dieldrin (HEOD) ingestion by human subjects for 18 to 24 months, and postexposure for 8 months. Arch. Environ. Health 18:12-21.

Iatropoulos, M. et al. 1975. Absorption, transport and organotropism of dichlorobiphenyl (DCB), dieldrin and hexachlorobenzene (HCB) in rats. Environ. Res. 10:384-389.

Jager, K. 1970. Aldrin, dieldrin, endrin and telodrin: An epidemiological and toxicological study of long-term occupational exposure. Elsevier Publ. Co., New York. pp.121- 131.

National Cancer Institute (NCI). 1978. Bioassay of aldrin and dieldrin for possible carcinogenicity. DHEW Publication No. (NIH) 78-821. NCI Carcinogenesis Tech. Rep. Ser. No. 21 NCI- CG-TR-21.

Ottolenghi, A., Haseman, J. and Suggs, F. 1974. Teratogenic effects of aldrin, dieldrin and endrin in hamsters and mice. Teratology 9:11-16.

Shell. 1984. Review of mammalian and human toxicology, aldrin and dieldrin. Review series HSE 84.003. Shell Internationale Petroleum Maatschappij. B.V. The Hague.

Song, J. and Harville, C. 1964. Abstr. Fed. Proc. 23:336.

Sundaram, K. Damodaran, V. and Venkitasubramanian, T. 1978a. Absorption of dieldrin through monkey and dog skin. Indian J. Exp. Biol. 16:101-103.

Treon, J. and Cleveland, F. 1955. Toxicity of certain chlorinated hydrogen insecticides for laboratory animals, with special reference to aldrin and dieldrin. Agric. Food Chem. 3:402- 408.

Walker, A., Stevenson, D., Robinson, J., Thorpe, E. and Roberts, M. 1969. The toxicology and pharmacodynamics of dieldrin (HEOD): Two-year oral exposures of rats and dogs. Toxicol. Appl. Pharmacol. 15:345-373.

Antimony

Aiello, G. 1955. Pathology of antimony. Folia Med (Naples) 38:100 (Ital.).

Belyaeva, A.P. 1967. The effects of antimony on reproduction. Gig Truda Prof. Zabol. 11:32.

Casto, B.C., Meyers, J. and DiPaolo, J.A. 1979. Enhancement of viral transformation for evaluation of the carcinogenic or mutagenic potential of inorganic metal salts. Cancer Res. 39:193-198.

Elinder, C.G. and Friberg,L. 1977. Antimony. In: Friberg, L., Nordberg, G.F. and Vouk, V.B. (eds.): Handbook on the toxicology of metals. Elsevier/North Holland. New York. pp. 283-292.

Environmental Protection Agency (USEPA). 1980. Ambient Water Quality Criteria for Antimony. Office of Water Regulations and Standards, Washington, D.C. USEPA 440/5-80-020.

Environmental Protection Agency (USEPA). 1991. Integrated Risk Information System (IRIS). Environmental Criteria and Assessment Office, Cincinnati, Ohio. June.

Goyer, R. 1986. Toxic effects of metals, In: Casarett and Doull's Toxicology-The Basic Science of Poisons, Third edition. Eds. Klassen, C., Amdur, M. and Doull,J. MacMillan Publishing Co. New York. pp. 582-635.

Paton, F. and Allison, A. 1972. Chromosome damage in human cell cultures induced by metal salts. Mutat. Res. 16:332-336.

Schroeder, H., Mitchner, M. and Nasar, A. 1970. Zirconium, niablium, antimony and lead in rats: Life-term studies. J. Nutr. 100:59

Arsenic

Brown, C. and Chu, K. 1983a. Approaches to epidemiologic analysis of prospective and retrospective studies: Example of lung cancer and exposure to arsenic. In: Risk Assessment Proc. SIMS Conf. on Environ. Epidemiol. June 28-July 2, 1982, Alta, VT. SIAM Publication.

Brown, C. and Chu, K. 1983b. Implications of the multistage theory of carcinogenesis applied to occupational arsenic exposure. J. Natl. Cancer Inst. 70: 455-463.

Brown, C. and Chu, K. 1983c. A new method for the analysis of cohort studies, implications of the multistage theory of carcinogenesis applied to occupational arsenic exposure. Environ. Health Perspect. 50:293-308.

Chen, C., Chuang, Y., You, S., Lin, T. and Wu, H. 1986. A retrospective study on malignant neoplasms of bladder, lung, and liver in blackfoot disease endemic area in Taiwan. Br. J. Cancer. 53:399-405.

Coulson, E.J., Remington, R.E. and Lynch, K.M. 1935. Metabolism in the rat of the naturally occurring arsenic of shrimp as compared with arsenic trioxide. J. Nutr. 10:255-270.

Environmental Protection Agency (USEPA). 1984. Health Assessment Document for Inorganic Arsenic. Office of Health and Environmental Assessment, Washington, D.C. USEPA 600/8-83-021F.

Environmental Protection Agency (USEPA). 1991. Integrated Risk Information System (IRIS). Environmental Criteria and Assessment Office. Cincinnati, Ohio. June.

Environmental Protection Agency (USEPA). 1991a. Health Effects Assessment Summary Tables (HEAST)-Annual. Environmental Criteria and Assessment Office. Cincinnati, Ohio.

Ray-Bettley, F. and O'Shea, J.A. 1975. The absorption of arsenic and its relation to carcinoma. Br. J. Dermatol. 92:563-568.

Tseng, W. 1977. Effects and dose response relationships of skin cancer and blackfoot disease with arsenic. Environ. Health Perspect. 19:109-119.

Barium

Brenniman, G. and Levy, P. 1984. High barium levels in public drinking water and its association with elevated blood pressure In: Advances in Modern Toxicology IX, E.J. Calabrese, Ed. Princeton Scientific Publications, Princeton, NJ pp. 231- 249.

Environmental Protection Agency (USEPA). 1985. Draft Health Advisory for Barium. Office of Drinking Water. Washington, D. C. September 30, 1985.

Environmental Protection Agency (USEPA). 1991a. Health Effects Assessment Summary Tables-Annual. Environmental Criteria and Assessment Office. Cincinnati, Ohio.

Environmental Protection Agency (USEPA). 1991. Integrated Risk Information System (IRIS). Environmental Criteria and Assessment Office. Cincinnati, Ohio. June.

Harrison, G., Carr, T. and Sutton, A. 1967. Distribution of radioactive calcium, strontium, barium and radium following intravenous injection into a healthy man. Int. J. Radiat. Biol. 13(3): 235-247.

International Commission on Radiological Protection (ICRP). 1973. Alkaline earth metabolism in adult man. ICRP Publication 20. Health Phys. 24:125-221.

Klaassen, C., Amdur, M. and Doull, J. (eds.) 1986. Casarett and Doull's Toxicology: The Basic Science of Poisons. Third Edition. Macmillan Publishing Co., New York. pp. 623-624.

Lengemann, F. 1959. The site of action of lactose in the enhancement of calcium utilization. J. Nutrition. 69:23-27.

Proctor, N., Hughes, J. and Fischman, M. 1988. Chemical Hazards of the Workplace. Second Edition. J. B. Lippincott Company, Philadelphia, PA. pp. 88-89.

Wones, R., Stadler, B. and Frohman, L. 1990. Lack of effect of drinking water on cardiovascular risk factor. Environ. Health Perspect. 85:1-13.

Benzene

International Agency for Research on Cancer (IARC). 1982. IARC monographs on the evaluation of the carcinogenic risk of chemicals to humans. Volume 27: Some aromatic amines, anthraquinones and nitroso compounds, and inorganic fluorides used in drinking water and dental prUSEPArations. World Health Organization, Lyon, France.

Maltoni, C., Conti, B., Cotti, G., and Belpoggi, F. 1985. Experimental studies on benzene carcinogenicity at the Bologna Institute of Oncology: Current results and ongoing research. Am. J. Ind. Med. 7:415-446.

National Academy of Science (NAS). 1976. Health Effects of Benzene: A Review Committee on Toxicology, Assembly of Life Sciences. National Research Council, Washington, D.C.

Ott, M.G., Townsend, J.C., Fishbeck, W.A. and Langner, R.A. 1978. Mortality among individuals occupationally exposed to benzene. Arch. Environ. Health, 33:3-10.

Rinsky, R.A. Young, R.J. and Smith, A.B. 1981. Leukemia in benzene workers. Am. J. Ind. Med. 3:217-245.

U.S. Environmental Protection Agency (USEPA). 1985. Drinking Water Criteria Document for Benzene (Final Draft). Office of Drinking Water, Washington, D.C., April 1985.

U.S. Environmental Protection Agency (USEPA). 1991. Integrated Risk Information System (IRIS). Environmental Criteria and Assessment Office. Cincinnati, Ohio. June.

Wong, O., Morgan, R.W. and Whorton, M.D. 1983. Comments on the NIOSH Study of Leukemia in Benzene Workers. Technical report submitted to Gulf Canada, Ltd by Environmental Health Associates.

Benzene Hexachloride (BHC)

Albro, P. and Thomas, R. 1974. Intestinal Absorption of Hexachlorobenzene and Hexachlorocyclohexane Isomers In Rats. Bull. Environ. Contam. Toxicol. 12:289-294.

Environmental Protection Agency (EPA), 1985. Drinking Water Criteria Document for Lindane, Final Draft. Environmental Criteria and Assessment Office. March . ECAO-CIN-402.

Environmental Protection Agency (EPA) 1991. Integrated Risk Information System (IRIS). Environmental Criteria and Assessment Office. Cincinnati, OH. June.

Hayes, W.J., Jr. 1982. Pesticides Studies in Man. Williams and Williams Baltimore. pp. 385-389.

ITO, N., NAGASAKI, H. ARAI, M., et.al 1973. Histoloigical and Ultrastructural studies on the Hepatocarcinogencity of benzenehexachloride in mice. J. Natl. Cancer Inst. 51: 817-826.

MUNIR, K.M. SOMAN, C.S. and SAMATI, V. 1983. Hexachlorocylohexane-induced tumorigencity in mice under different experimental conditions. Tumori. 69: 383-386.

THORPE, E. and Walker, A.I.T. 1973. Toxicology of dieldrin (HEOD). II. Compartive long-term oral toxicity in mice with dieldrin, DDT, phenobarbitone, beta-HCH and gamma-HCH. Food Cosmet. Toxicol. 11:433-442.

Benzoic Acid

Environmental Protection Agency (USEPA). 1991. Integrated Risk Information System (IRIS). Environmental Criteria and Assessment Office. Cincinnati, Ohio. June.

Federation of American Societies for Experimental Biology (FASEB). 1973. Evaluation of the Health Aspects of Benzoic Acid and Sodium Benzoate as Food Ingredients. Report No. SCOGS-7. NTIS PB-22383716. p. 17.

Food and Drug Research labs., Inc. (FDRL). 1972. Teratologic evaluation of FDA 71-27 (sodium benzoate). pp. 75-79.

Gerlach, V. 1909. VIII. Summary of the results. In: Physiological activity of benzoic acid and sodium benzoate, V. Gerlach, Ed. Verlag von Heinrich Staadt, Weisbaden. p. 90- 92. (cited in Informatics, Inc., 1972).

Ignat'ev, A. 1965. Experimental information contributing to a hygienic characterization of the combined effect produced by some food presentations. Vop. Pitan. 24(3):61-68. (cited in Informatics, Inc., 1972).

Marquardt. 1960. See USEPA (1990) reference.

Shtenberg, A. and Ignat'ev, A. 1970. Toxicological evaluation of some combinations of food preservatives. Food Cosmet. Toxicol. 8(4): 369-380.

Wiley and Bigelow. 1908. See USEPA (1990) reference.

Beryllium

Environmental Protection Agency (USEPA). 1980. Ambient Water Quality Criteria Document for Beryllium. Environmental Criteria and Assessment Office, Cincinnati, Ohio. USEPA 440/5-80-024 and Errata, 1982. NTISPB 81-117350.

Environmental Protection Agency (USEPA). 1986. Health Assessment Document for Beryllium. Review Draft. Office of Health and Environmental Assessment, Washington D.C. April 1986. USEPA 600/8-84/026B.

Environmental Protection Agency (USEPA). 1987. Draft Toxicological Profile for Benzene. Agency for Toxic Substances and Disease Registry (ATSDR). U.S. Public Health Service. October 1987.

Environmental Protection Agency (USEPA). 1991a. Health Effects Assessment Summary Tables-Annual. Office of Solid Waste and Emergency Response, Washington, D.C.

Environmental Protection Agency (USEPA). 1991. Integrated Risk Information System (IRIS). Environmental Criteria and Assessment Office. Cincinnati, Ohio. June.

Meehan, W.R. and Smyth, L.E. 1967. Occurrence of beryllium as a trace element in environmental materials. Environ. Sci. Technol. 1:839-844. (as cited in USEPA 1986).

Schroeder, H.A. and Mitchner, M. 1975. Life-term studies in rats: effects of aluminum, barium, beryllium, and tungsten. J. Nutr. 105:421-427. (as cited in USEPA 1986).

Tepper, L.B., Hardy, H.L. and Chamberlain, R.J. 1961. Toxicity of beryllium compounds. New York, N.Y.: Elsevier. pp. 146-168. (as cited in USEPA 1986).

Wagoner, J.R., Infante, P.F. and Bayliss, D.L. 1980. Beryllium: an etiologic agent in the induction of lung cancer, nonneoplastic respiratory disease, and heart disease among industrially exposed workers. Environ. Res. 21(1):15-34.

Bis(2-ethylhexyl)phthalate

Carpenter et al. 1953. Chronic oral toxicity of di(2- ethylhexyl)phthalate for rats, guinea pigs and dogs. Arch. Indust. Hyg. Occup. Med. 8:219-226.

Environmental Protection Agency (USEPA). 1980. Ambient Water Quality Criteria for Phthalate Esters. Office of Water Regulations and Standards, Criteria and Standards Division, Washington, D.C. October 1980. USEPA 40/5-80-067.

Environmental Protection Agency (USEPA). 1991. Integrated Risk Information System (IRIS). Environmental Criteria and Assessment Office. Cincinnati, Ohio. June.

National Toxicology Program (NTP). 1982. Carcinogenesis Bioassay of Di(2-ethylhexyl)phthalate in F344 Rats and B6C3F, Mice. Feed Study, NTP Technical Report Series No. 217, U.S. DUSEPArtment of Health and Human Services. NIH Publication No. 82-1773. NTP-80-37.

2-Butanone (Methyl Ethyl Ketone)

Cavender, F.L., Casey, H.W., Salem, H., Swenberg, J.A. and Garalla, E.J. 1983. A 90-day vapor inhalation toxicity study of methyl ethyl ketone. Fund. Appl. Toxicol. 3:264-270.

Environmental Protection Agency (USEPA). 1991. Integrated Risk Information System (IRIS). Environmental Criteria and Assessment Office. Cincinnati, Ohio. June.

Environmental Protection Agency (USEPA). 1991a. Health Effects Assessment Summary Tables-Annual. Environmental Criteria and Assessment Office, Cincinnati, Ohio.

LaBelle, W. and Brieger, H. 1955. The vapor toxicity of a composite solvent and its principal components. Am. Med. Assoc. Arch. Ind. Health. 12:623-627.

Lande, S.S., Durkin, P.R., Christopher, D.H., Howard, P.H. and Saxena, J. 1976. Investigation of selected potential environmental contaminants: ketonic solvents. Environ- mental Protection Agency, Washington, D.C. USEPA 560/2-76-003.

Schwetz, B.A., Leong, B.K.J. and Gehring, P.J. 1974. Embryo- and fetotoxicity of inhaled carbon tetrachloride, 1,1-dichloroethane and methyl ethyl ketone in rats. Toxicol. Appl. Pharmacol. 28:452-464.

Takeguchi, Y., Ono, Y., Hisanaga, N., et al. 1983. An experimental study of the combined effects of n-hexane and methyl ethyl ketone. Br. J. Ind. Med. 40:199-203.

Butyl Benzyl Phthalate

Health Effects Assessment (HEA) document-Annual, prepared by the Environmental Criteria and Assessment Office, USEPA, Cincinnati, Ohio, 1991a.

International Agency For Research On Cancer (IARC). 1982. Monographs on the evaluation of the carcinogenic risks of chemicals to humans. Volume 29: Some industrial chemicals and dyestuffs. IARC, Lyon, France, p. 193.

National Toxicology Program (NTP). 1981. Bioassay of butyl benzyl phthalate for possible carcinogenicity. U.S. DUSEPArtment of Health and Human Services, Washington, D.C., DHHS (NIH) Publication No. 80-1769, NTP No. 81-25.

National Toxicology Program (NTP). 1985. Project No. 12307-02-03, Hazelton Laboratories America, Inc. Unpublished study.

Cadmium

California Department of Health Services (CDHS). 1986. Report to the Scientific Review Panel on Cadmium. Part B. Health and Effects of Cadmium. Revised. Prepared by the Epidemiological Studies and Surveillance Section, Berkely, California. September 19, 1986.

Environmental Protection Agency (USEPA). 1985. Drinking Water Criteria Document for Cadmium. Final Draft. Office of Drinking Water, Washington, D.C. April 1985. PB86-117934.

Environmental Protection Agency (USEPA). 1985b. Updated Mutagenicity and Carcinogenicity Assessment of Cadmium. Addendum to the Health Assessment Document for Cadmium (May 1981:USEPA/600/8-81/023). USEPA 600/8-83-025F.

Environmental Protection Agency (USEPA). 1991. Integrated Risk Information System (IRIS). Environmental Criteria and Assessment Office. Cincinnati, Ohio. June.

Thun, M.J., Schnorr, T.M., Smith, A.B., Halperin, W.E., and Lemen, B.A. 1985. Mortality among a cohort of U.S. cadmium production workers - An update. JNCI 74(2):325-333.

Carbon Disulfide

Hardin, B.D., Bond, G.P., Sikor, M.R., Andrew, F.D., Beliles, R.P. and Niemeier, R.W. 1981. Testing of selected work place chemicals for teratogenic potential. Scand. J. Work Environ. Health, 7(Suppl. 4): 66-75.

Johnson, B.L., Boyd, J., Burg, J.A.R., Lee, S.T., Xintaras, C. and Albright, B.E. 1983. NIOSH. Div. Biomed. & Behav. Sci., Div. Surveillance Hazard Evaluat., Cincinnati, Ohio.

Price et al. 1984.

Sax, 1984. Dangerous properties of industrial materials. Sixth Edition, Van Nostrand Reinhold, New York, p. 642.

U.S. Environmental Protection Agency (USEPA). 1991. Integrated Risk Information System (IRIS), Environmental Criteria and Assessment Office, Cincinnati, Ohio. June.

Chlordane

Clayton, G. and Clayton, F. 1981 - 1982. Patty's Industrial Hygiene and Toxicology: Volumes 2A, 2B, 2C: Toxicology. Third Edition. John Wiley and Sons. New York, N.Y.

Ambrose, A.M., Christensen, H.E., Robbins, D.J. and Rather, L.J. 1953. Toxicological and Pharmacological Studies on Chlordane. Arch. Ind. Hyg. Occup. Med. 7:197-210.

Sittig, M. 1985. Handbook of Toxic and Hazardous Chemicals and Carcinogens, Second Edition. Noyes Publications, Park Ridge, New Jersey.

U.S. Environmental Protection Agency (USEPA). 1991. Integrated Risk Information System (IRIS). Environmental Criteria and Assessment Office. Cincinnati, Ohio. September.

Velsicol Chemical Corporation, 1983. MRID No. 00144312, 00132566. Prepared for U.S. Environmental Protection Agency (USEPA). Washington, D.C.

U.S. Environmental Protection Agency (USEPA), 1984. National Primary Drinking Water Regulations; Synthetic Organic Chemicals, Inorganic Chemicals and Microorganisms. Fed. Reg. 51:469-36-47025 (November 13, 1985).

National Cancer Institute (NCI). 1977. Bioassay of Chlordane for Possible Carcinogenicity. NCI Carcinogenesis Tech. Rep. Ser. No. 8. U.S. DHEW Publ. No. (NIH) 77-808. Bethesda, Md.

Chlorobenzene

Dilley, J. 1977. Toxic evaluation of inhaled chlorobenzene (monochlorobenzene). Prepared by Stanford Res. Inst. under Contract 210-76-0126. NIOSH, DHEW, Cincinnati, Ohio. NTIS PB 276 623.

Environmental Protection Agency (USEPA). 1985. Draft Health Advisory for Chlorobenzene. Office of Drinking Water, Washington, D.C. September 30, 1985.

Environmental Protection Agency (USEPA). 1991. Integrated Risk Information System. Environmental Criteria and Assessment Office. Cincinnati, Ohio. June.

Health Effects Assessment (HEA) document-Annual, prepared by the Environmental Criteria and Assessment Office, U.S. Environmental Protection Agency, Cincinnati, Ohio, 1991a.

Knapp, W., Busey, W. and Kundzins, W. 1971. Subacute oral toxicity of monochlorobenzene in dogs and rats. Toxicol. Appl. Pharmacol. 19:393 (Abstract).

Monsanto Company. 1967a. 13-Week oral administration in dogs. Monochlorobenzene. Final Report. Prepared by Hazelton Laboratories, Project No. 241-105. February 24.

Chloroform

Environmental Protection Agency (USEPA). 1984. Health Effects Assessment for Chloroform. Environmental Criteria and Assessment Office, Cincinnati, Ohio. September 1984. USEPA 540/1-86-010.

Environmental Protection Agency (USEPA). 1985. Health Assessment Document for Chloroform. Environmental Criteria and Assessment Office, Research Triangle Park, North Carolina. September 1985. USEPA 600/8-84-004F.

Environmental Protection Agency (USEPA). 1991. Integrated Risk Information System (IRIS). Environmental Criteria and Assessment Office, Cincinnati, Ohio. June.

Heywood, R., Sortwell, R.J., Noel, P.R.B., et al. 1979. Safety evaluation of toothpaste containing chloroform. III. Long-term study in beagle dogs. J. Environ. Pathol. Toxicol. 2:835-851.

Jorgenson, T.A., Meirhenry, E.F., Rushbrook, C.J. et al. 1985. Carcinogenicity of chloroform in drinking water to male Osborne-Mendel rats and female B6C3F1 mice. Fund. Appl. Toxicol. (USA) 5(4):760-769.

National Cancer Institute (NCI). 1976. Carcinogenesis Bioassay of Chloroform. CAS No. 67-66-3. NCI Carcinogenesis Technical Report Series No. 0. Bethesda, M.D. DHEW (NIH) Publication No.76.

Chromium (Hexavalent)

Environmental Protection Agency (USEPA). 1980. Ambient Water Quality Criteria for Chromium. Office of Water Regulations and Standards. Washington, D.C. USEPA 440/5-80-035.

Environmental Protection Agency (USEPA). 1984. Health Assessment Document for Chromium. Environmental Criteria and Assessment Office, Research Triangle Park, N.C. USEPA 600/8-83-014F.

Environmental Protection Agency (USEPA). 1985. Draft Health Advisory for Chromium. Office of Drinking Water, Washington, D.C. September 30, 1985.

Environmental Protection Agency (USEPA). 1991a. Health Effects Assessment Summary Tables (HEAST)-Annual.. Office of Solid Waste and Emergency Response. Washington, D.C.

Environmental Protection Agency (USEPA). 1991. Integrated Risk Information System (IRIS). Environmental Criteria and Assessment Office. Cincinnati, Ohio. June.

MacKenzie, R.D., Byerrum, R.U., Decker, C.F., Hoppert, C.A. and Langham, R.F. 1958. Chronic toxicity studies. II. Hexavalent and trivalent chromium administered in drinking water to rats. Am. Med. Assoc. Arch. Ind. Health. 18:232-234.

Mancuso, T.G. 1975. International conference on heavy metals in the environment. Toronto, Ontario, Canada.

Chromium (Trivalent)

Environmental Protection Agency (USEPA). 1985. Draft Health Advisory for Chromium. Office of Drinking Water. Washington, D.C. September.

Environmental Protection Agency (USEPA). 1991. Health Effects Assessment Summary Tables (HEAST)-Annual. Office of Solid Waste and Emergency Response. Washington, D.C.

Environmental Protection Agency (USEPA). 1991. Integrated Risk Information System (IRIS). Environmental Criteria and Assessment Office. Cincinnati, Ohio. June.

Hopkins, L. 1965. Distribution in the rat of physiological amounts of injected Cr51 (III) with time. Am. J. Physiol. 209:731-735.

Ivankovic, S. and Preussman, R. 1975. Absence of toxic and carcinogenic effects after administration of high doses of chromic oxide pigment in subacute and long-term feeding experiments in rats. Food Cosmet. Toxicol. 13:347-351.

Klaassen, C., Amdur, M. and Doull, J. (eds) 1986. Casarett and Doull's Toxicology: The Basic Science of Poisons, Third Edition. Macmillan Publishing Company, New York.

Lindberg, E. and Hedenstierna, G. 1983. Chrome plating: Symptoms, findings in upper airways, and effects on lung function. Arch. Environ. Health. 38:367-374.

National Institute for Occupational Safety and Health (NIOSH). 1983. Registry of Toxic Effects of Chemical Substances (RTECS). Vol 2, p. 72.

MacKenzie, R.D., Byerrum, R.U., Decker, C.F., Hoppert, C.A. and Langham, R.F. 1958. Chronic toxicity studies. II. Hexavalent and trivalent chromium administered in drinking water to rats. Am. Med. Assoc. Arch. Ind. Health. 18:232-234.

Schroeder, D. et al. 1965. Chromium, cadmium and lead in rats: Effects on life span, tumors and tissue levels. J. Nutr. 86:51-66.

Copper

Clement Associates, Inc. 1985. Chemical, physical and biological properties of compounds present at hazardous waste sites, Final Report, September 1985.

U.S. Environmental Protection Agency (USEPA). 1986. Superfund Public Health Evaluation Manual, Office of Emergency and Remedial Response and Office of Solid Waste and Emergency Response, Washington, D.C., October 1986, USEPA 540/1-86-060.

U.S. Environmental Protection Agency (USEPA). 1991. Integrated Risk Information System (IRIS), Environmental Criteria and Assessment Office, Cincinnati, Ohio. June.

U.S. Environmental Protection Agency (USEPA). 1991a. Health Effects Assessment Summary Tables (HEAST)-Annual. Environmental Criteria and Assessment Office. Cincinnati, Ohio.

1,4-Dichlorobenzene

Astrand, I. 1975. Uptake of Solvents in the blood and tissue of man. Scand. J. Work. Environ. Health 1:199-208 (as cited in EPA 1987)

Dallas, C.E., Weir, F.W., Fellman, S., Putcha, L. and Bruckner, J.V. 1983. The uptake and distribution of 1,1-dichloroethylene in rats during inhalation exposure. Toxicol. Appl. Pharmacol. 68:140-151 (As cited in EPA 1987)

Environmental Protection Agency (EPA). 1985. Drinking Water Criteria Document for ortho-Dichlorobenzene, meta-Dichlorobenzene, and para-Dichlorobenzene (Draft). Office of Drinking Water, Washington, D.C. June 1985. PB86-117918

Environmental Protection Agency (EPA). 1987. Health Advisory for ortho-Dichlorobenzene, and para-Dichlorobenzene. Office of Drinking Water, Washington, D.C. March 31, 1987

Environmental Protection Agency (EPA). 1989. Health Effects Assessment Summary tables. Prepared by the Office of Health and Environmental Assessment, Environmental Assessment and Criteria Office, Cincinnati, Ohio, for the Office of Solid Waste and Emergency response, Office of Emergency and Remedial Response, Washington, D.C. June 1989

National Toxicology Program. 1986. Toxicology and carcinogenesis studies of 1,4-dichlorobenzene in F344/N rats and B6D3F1 mice. U.S. DHHS, NIH Technical Report Series No. 319

Riley, R.A., Chart, I.S., Doss, A. et al. 1980. Para-dichlorobenzene: Long-term Inhalation Study in the Rat. ICI Report Nos. CTL/P/447. August 1980

DDT

Clayton, G. and Clayton, F. 1981. Patty's Industrial Hygiene and Toxicology. Third Revised Ed. Volume 2B Toxicology. John Wiley and Sons, New York.

Clement, J. and Okey, A. 1974. Reproduction in female rats born to DDT treated parents. Bull. Environ. Contam. Toxicol. 12:373-377. (Cited in NIOSH 1978).

Deichmann, W. and MacDonald, W. 1971. Organochlorine pesticides and human health. Food Cosmet. Toxicol. 9:91-103. (Cited in NIOSH 1978).

Deichmann, W., MacDonald, W., Beasley, A. and Cubit, D. 1971. Subnormal reproduction in beagle dogs induced by DDT and aldrin. Ind. Med. 40:10-20. (Cited in NIOSH 1978).

Duby, R., Travis, H. and Terrill, C. 1971. Uterotrophic activity of DDT in rats and mink and its influence on reproduction in the rat. Toxicol. Appl. Pharmacol. 8:348-355. (Cited in NIOSH 1978).

Environmental Protection Agency (USEPA). 1980. Ambient Water Quality Criteria for DDT. Office of Water Regulations and Standards, Criteria and Standards Division. Washington, D.C. USEPA 440/5-80-038. October 1980.

Environmental Protection Agency (USEPA). 1984. Health Effects Assessments for DDT. Office of Emergency and Remedial Response, Office of Solid Waste and Emergency Response. Washington, D. C. USEPA/540/1-86/026. September 1984.

Environmental Protection Agency (USEPA). 1991. Integrated Risk Information System (IRIS). Environmental Criteria and Assessment Office. Cincinnati, Ohio. June.

Fitzhugh, O. and Nelson, A. 1947. The chronic oral toxicity of DDT [2,2-bis(p-chloropheny 1)-1,1,1-trichloroethane]. J. Pharmacol. Exp. Ther. 89: 1830. (Cited in NIOSH 1978).

Fitzhugh, O. 1948. Use of DDT insecticides on food products. Ind. Eng. Chem. 40:704-705. (Cited in NIOSH 1978).

Jonsson, H. Jr., Keit, J., Gaddy, R., Loadholt, C., Henniger, G. and Walker, E. Jr. 1975. Prolonged ingestion of commercial DDT and PCB: Effects on progesterone levels and reproduction in the mature female rat. Arch. Environ. Contam. Toxicol. 3:479-490. (Cited in NIOSH 1978).

Keplinger, M., Deichmann, W. and Sala, F. 1968. Effects of combinations of pesticides on reproduction in mice. In: Pesticides Symposia, Deichmann, W. ed. Halos and Associates, Inc., Miami, FL. pp. 125-138. (Cited in NIOSH 1978).

Klaassen, C. D., Amdur, M. O. and Doull, J. (eds.). 1986. Casarett and Doull's Toxicology: The Basic Science of Poisons. Third Edition. Macmillan Publishing Co., New York.

McLachlan, J. and Dixon, R. 1972. Gonadal function in mice exposed prenatally to p,p'-DDT. Toxicol. Appl. Pharmacol. 22:327. (Cited in NIOSH 1978).

National Institute for Occupational Safety and Health (NIOSH). 1978. Special Occupational Hazard Review: DDT U.S. DHEW (NIOSH) Publ. No. 78-200.

Ottoboni, A. 1969. Effect of DDT on reproduction in the rat. Toxicol. Appl. Pharmacol. 14:74-81. (Cited in NIOSH 1978).

Ottoboni, A., Bissell, G. and Hexter, A. 1977. Effects of DDT on reproduction in multiple generations of beagle dogs. Arch. Environ. Contam. Toxicol. 6:83-101. (Cited in NIOSH 1978).

Schmidt, R. 1973. Effect of 1,1,1-trichloro-2,2-bis(p-chlorophenyl)-ethane (DDT) on the prenatal development of the mouse (under consideration of distribution of tritium-labeled and carbon-14-labeled DDT on pregnant mice). (Ger.) Biol. Rundsch. 11:316-317. (Cited in NIOSH 1978).

Treon, J. and Cleveland, F. 1955. Toxicity of certain chlorinated hydrocarbon insecticides for laboratory animals, with special reference to aldrin and dieldrin. Agric. Food Chem. 3:402-408. (Cited in NIOSH 1978, IARC 1974).

Ware, G. and Good, E. 1967. Effects of insecticides on reproduction in the laboratory mouse: II. Mirex, Telodrin and DDT. Toxicol. Appl. Pharmacol. 10:54-61. (Cited in NIOSH 1978).

Di-n-Butyl Phthalate

Shiota, K., and Nishimura, H. 1982. Teratogenicity of di(2-ethylhexyl)phthalate (DEHP) and di-n-butyl phthalate (DBP) in mice. Environ. Health Perspect. 45:65-70.

Smith, C. 1953. Toxicity of butyl sterate, dibutyl sebacate, dibutyl phthalate and methoxyethyloleate. Arch. Hyg. Occup. Med. 7:310-318.

U.S. Environmental Protection Agency (USEPA). 1980. Ambient Water Quality Criteria for Phthalate Esters. Office of Water Regulations and Standards, Washington, D.C., October 1980, USEPA 440/5-80-067.

U.S. Environmental Protection Agency (USEPA). 1991. Integrated Risk Information System (IRIS). Environmental Criteria and Assessment Office. Cincinnati, Ohio. June.

Di-n-Octyl Phthalate

Environmental Protection Agency (USEPA). 1980. Ambient Water Quality Criteria for Phthalate Esters. Office of Water Regulations and Standards, Washington, D.C. October 1980. USEPA 440/5-80-067.

Environmental Protection Agency (USEPA) 1991a. Health Effects Assessment Summary Tables-Annual. Office of Emergency and Remedial Response. Washington, D.C.

National Institute for Occupational Safety and Health (NIOSH). 1985. Registry of Toxic Effects of Chemical Substances Data Base. Washington, D.C. July 1985.

National Toxicology Program and the Interagency Regulatory Liaison Group (NTP/IRLG). 1982. The Conference of Phthalates. Environ. Health Perspect. 45:1-153.

Singh, A.R. et al. 1972. Teratogenicity of phthalate esters in rats. Jour. Pharmacol. Sci. 61. p. 51.

1,2-Dichloroethane

National Cancer Institute (NCI). 1978. Bioassay of 1,2-Dichloroethane for Possible Carcinogenicity. NCI Carcinogenesis Technical Report Series No. 55, Washington, D.C., DHEW (NIH) Publication No. 78-1361.

U.S. Environmental Protection Agency (USEPA). 1984. Health Effects Assessment for 1,2-Dichloroethane. Environmental Criteria and Assessment Office, Cincinnati, Ohio. September 1984. USEPA 540/1-86-002.

U.S. Environmental Protection Agency (USEPA). 1985. Health Effects Assessment for 1,2-Dichloroethane. Office of Health and Environmental Assessment, Washington, D.C., September 1985. USEPA-600/8-84-006F.

U.S. Environmental Protection Agency (USEPA). 1991. Integrated Risk Information System (IRIS). Environmental Criteria and Assessment Office, Cincinnati, Ohio. June

1,1-Dichloroethene

Environmental Protection Agency (EPA). 1987. Health Advisory for 1,1-Dichloroethene. Office of Drinking Water, Washington D.C. March 31, 1987.

Environmental Protection Agency (EPA). 1988. Integrated Risk Information System (IRIS). Environmental Criteria and Assessment Office, Cincinnati, Ohio. Revised September 7, 1988.

Dieldrin

Environmental Protection Agency (USEPA) 1987. Draft Toxicological Profile for Aldrin/Dieldrin. Agency for Toxic Substances and Disease Registry (ATSDR). U.S. Public Health Service. Atlanta, Georgia. November 1987.

Environmental Protection Agency (USEPA) 1987. Dieldrin-Health Advisory. Office of Drinking Water. U.S. Environmental Protection Agency, Washington, D.C., (aft) May 8, 1987.

Environmental Protection Agency (USEPA) 1991. Integrated Risk Information System (IRIS). Environmental Criteria and Assessment Office. Cincinnati, Ohio. June.

Hodge, H.C. et al. 1967. Toxicology and no-effect levels of aldrin and dieldrin. Toxicol. Appl. Pharmacol. 10:613.

Hoogendam, I. et al. 1962. Electroencephalograms in insecticide toxicity. Arch. Env. health. 4:92.

Jager, K.W. 1970. Aldrin, dieldrin, endrin and telodrin: An epidemiological and toxicological study of long-term occupational exposure. Elsevier Publishing Co., Amsterdam.

Walker, A., Stevenson, D., Robinson, J., Thorpe, E. and Roberts, M. 1969. The toxicology and pharmacodynamics of dieldrin (HEOD): Two-year oral exposure of rats and dogs. Toxicol. Appl. Pharmacol. 15:345-373.

2,4-Dimethylphenol

American Biogenics Corporation. 1989. Ninety day gavage study in albino mice using 2,4-dimethylphenol. Study 410-2831.

Environmental Protection Agency (USEPA). 1991a. Health Effects Assessment Summary Tables (HEAST)-Annual. Office of Solid Waste and Emergency Response. Washington, D.C.

Sittig, M. 1981. Handbook of toxic and hazardous chemicals. Park Ridge, New Jersey: Noyes Data Corporation. pp. 367,368.

Endosulfan

Buchel, K. ed. and Holmwood, G. 1983. Chemistry of Pesticides. John Wiley & Sons, New York: pp. 41.42.

CHRIS Hazardous Chemical Data. 1984. U.S. Department of Transportation, U.S. Coast Guard.

Clarke, M. et al. 1981. Veterinary Toxicology, 2nd ed. London: Bailliere Tindall: p. 143.

Environmental Protection Agency (USEPA). 1991. Integrated Risk Information System (IRIS). Environmental Criteria and Assessment Office. Cincinnati, Ohio. June.

Gosselin, R. et al. 1976. Clinical Toxicology of Commercial Products, 4th ed. Williams and Wilkins, Baltimore: II-187.

Sittig, M. 1985. Handbook of Toxic and Hazardous Chemicals and Carcinogens, 2ne ed. Noyes Publications, Park Ridge, New Jersey: pp. 396-397.

Endrin

Brooks, G. 1974. Chlorinated insecticides. Vol. II. Biological and environmental aspects. CRC Press, Cleveland, Ohio.

Chernoff, N. et al. 1979. Prenatal toxicity of endrin in rodents. I. Fetotoxic effects of prenatal exposure in hamsters. Submitted to Toxicol. Appl. Pharmacol. and the US Environmental Protection Agency. (Manuscript).

Clement Associates, Inc. 1985. Chemical. physical and biological properties of compounds present at hazardous waste sites. Final Report. September 1985.

Coble, Y. et al. 1967. Acute endrin poisoning. Jour. Am. Med. Assoc. 202:153.

Dikshith, T. and Datta, K. 1973. Endrin induced cytological changes in albino rats. Bull. Environ. Contam. Toxicol. 9:65.

Dikshith, T. and Datta, K. 1972. Effect of intratesticular injection of lindane and endrin on the testes of rats. Acta. Pharmacol. Toxicol. 31:1.

Environmental Protection Agency (USEPA). 1979. Reviews of the Environmental Effects of Pollutants: Endrin. Off. Res. Develop., Health Effects Res. Lab., Cincinnati, Ohio.

Environmental Protection Agency (USEPA). 1980. Ambient Water Quality Criteria for Endrin. Office of Water Regulations and Standards, Criteria and Standards Division. Washington, DC. USEPA 440/5-80-047.

Environmental Protection Agency (USEPA). 1991. Integrated Risk Information System (IRIS). Environmental Criteria and Assessment Office. Cincinnati, Ohio. June.

Grant, W. 1973. Cytological effects of environmental mutagens- pesticides. Mutat. Res. 21:221.

Hayes, W. and Curley, A. 1968. Storage and excretion of dieldrin and related compounds. Arch. Environ. Health. 16:155.

Nodu et al. 1972. Influence of pesticides on embryos. On the influence of organochlorine pesticides. Oyo Yakuri 6:673. (Jap.).

Ottolenghi, A. et al. 1974. Teratogenic effects of aldrin, dieldrin and endrin in hamsters and mice. Teratology. 9:11.

Thompson, F. 1971. Insecticides II. Toxicity Hazards. New Zea. Jour. Agric. 4:84.

Ethylbenzene

Andrew, F. et al. 1981. Teratologic assessment of ethylbenzene and 2-ethoxyethanol. Battelle .Pacific Northwest Laboratory, Richland, WA. NTIS PB83-208074. p. 108.

Chin, B.H., Mckelvey, J.A., Tyler, T.R., Calisti, L.J., Kozbelt, S.J. and Sullivan, L.J. 1980. Absorption, distribution and excretion of ethylbenzene, ethylcyclohexane and methyl ethylbenzene isomers in rats. Bull. Environ. Contam. Toxicol. 24:477-483.

Dutkiewicz, T. and Tyras, H. 1967. Study of the skin absorption of ethylbenzene in man. Br. J. Ind. Med. 24(4): 330-332.

Hardin, B.D., Bond, G.P., Sikov, M.R., Andrew, F.D., Beliles, R.P., and Niemeier, R.W. 1981. Testing of selected workplace chemicals for teratogenic potential. Scand. J. Work Environ. Health. 7(Suppl. 4): 66-75.

U.S. Environmental Protection Agency (USEPA) 1987. Health Advisory for Ethylbenzene. Office of Drinking Water, Washington, D.C., March 1987.

U.S. Environmental Protection Agency (USEPA). 1991. Integrated Risk Information System (IRIS). Environmental Criteria and Assessment Office. Cincinnati, Ohio. June.

Wolf, M.A., Rowe, V.K., McCollister, D.D., Hollingsworth, R.L. and Oyen, F. 1956. Toxicological studies of certain alkylated benzenes and benzene. Arch. Ind. Health 14:387-398.

Fluorene

Merck Index. 1989. Merck and Co., Inc.. Rahway, New Jersey.

Morris, H.P., Velat, C.A., Wagner, B.P., Dahlgard, M. and Ray, F.E. 1960. Studies of Carcinogenicity in the Rate of Derivatives of Aromatic Amines Related to N-2-Fluorenylacetamide. J. NaH. Cancer Inst. 24:149-180.

U.S. Environmental Protection Agency (USEPA). 1991. Integrated Risk Information System (IRIS). Environmental Criteria and Assessment Office. Cincinnati, Ohio. June.

U.S. Environmental Protection Agency (USEPA). 1989. 13-Week Mouse Oral Subchronic Toxicity Study. Prepared by Toxicity Research Laboratories, Ltd. Muskegon, MI for the Office of Solid Waste. Washington, D.C

Heptachlor Epoxide (Epoxyheptachlor)

Davis, H.J. 1965. Pathology Report on Mice Fed Aldrin, Dieldrin, Heptachlor or Heptachlor Epoxide for Two Years. Internal FDA Memorandum to Dr. A.J. Lehman, July 19.

Hrdina, P.D., R.L. Singh and D.A.V. Peters. 1974. Changes in Brain Biogenic Amines and Body Temperature After Cyclodiene Insecticides. Toxicol. Appl. Pharmacol. 29:119.

IRAC (International Agency for Research on Cancer). 1979a. Heptachlor and Heptachlor Epoxide. In: Some Halogenated Hydrocarbons. IRAC Monographs on the Evaluation of the Carcinogenic Risk of Chemicals to Humans. WHO, IRAC, Lyon, France. Vol. 20, 129-154.

U.S. Environmental Protection Agency (USEPA). 1985. Drinking Water Document for Heptachlor, Heptachlor Epoxide and Chlordane (Final Draft). Prepared by Environmental Criteria and Assessment Office, U.S. Environmental Protection Agency, Cincinnati, OH. EPA 600/X-84-197-1. NTIS PB 86-134152.

U.S. Environmental Protection Agency (USEPA). 1991. Integrated Risk Information System (IRIS), Environmental Criteria and Assessment Office. Cincinnati, Ohio. June.

Velsicol Chemical Corporation. 1973.

Verschueren, K. 1983. Handbook of Environmental Data on Organic Chemistry. 2nd ed. Van Nostrand Reinhold Company, NY. 1310p.

Yamaguchi, I., F. Matsumura and A.A. Kadous. 1979. Inhibition of Synaptic ATPases by Heptachlor Epoxide in Rat Brain. Pestic. Biochem. Physiol. 11(1-3): 285-293.

Yamaguchi, I., F. Matsumura and A.A. Kadous. 1980. Heptachlor Epoxide: Effects on Calcium-Mediated Transmitter Release from Brain Synaptosomes in Rat. Biochem. Pharmacol. 29 (12): 1815-1823.

Iron

Boyd, J., Doll, R., Foulds, J. and Leiper, J. 1970. Cancer of the lung in iron ore (haematite) miners. Br. J. Industr. Med. 27:97-103.

Clement Associates, Inc. 1985. Chemical, physical and biological properties of compounds present at hazardous waste sites. Final Report. September 1985.

Klaassen, C., Amdur, M. and Doull, J. (eds.). 1986. Casarett and Doull's Toxicology: The Basic Science of Poisons. Third Edition. Macmillan Publishing Co., New York.

McLaughlin, A. and Harding, H. 1956. Pnemoconiosis and other causes of death in iron and steel foundry workers. Arch. Industr. Health, 14:350-362.

Isophorene

American Conference of Governmental Industrial Hygienists. 1986. Documentation of Threshold Limit Values and Biological Exposure Indice's. 5th ed. ACGIH, Inc., Cincinnati, Ohio.

Bio/Dynamics. 1984. Inhalation teratology study in rats and mice. Final Report 3223772. Unpublished study performed by Bio/Dynamics Inc., East Millstone, NJ for Exxon Biomediby various industrial airborne chemicals. Toxicol. Lett. (AMST) 9(2):137-143.nervous system depressants. Benefits of an animal model.) Cah Notes Doc 104(s):351-355 (French).

Environmental Protection Agency (USEPA). 1986a. Health and Environmental Effects Profile cal Science, East Millstone, NJ. OTS Section 4 submission DOC ID 40-855049. Microfiche No. OTS 0507224.

DeCeaurriz, J.C., Micillino, J.C., Bonnet, P., Guenier, J.P. 1981a. Sensory irritation caused for Isophorone. Prepared for the Office of Solid Waste and Emergency Response, Washington, D.C., by the Office of Health and Environmental Assessment, Environmental Criteria and Assessment Office, Cincinnati, Ohio.

Environmental Protection Agency (USEPA). 1991. Integrated Risk Information System (IRIS). Environmental Criteria and Assessment Office. Cincinnati, Ohio. June.

Hazleton Labs. 1964. Acute toxicity studies, mice, rats, rabbits, guinea pigs. Unpublished study performed by Hazleton Laboratories, Inc., Falls Church, VA for Exxon Chem. Amers. Houston, TX OTS 8d Submission Doc ID 878210933, Microfiche No. 206267.

DeCeaurriz, J.C., Bonnet, P., Certin, C., Mueller, J., Guenier, J.P. 1981b. (Chemicals as central Health Effects AsIsophsessment (HEA) document, prepared by the Environmental Criteria and Assessment Office, U.S. Environmental Protection Agency, Cincinnati, Ohio 1989.

National Toxicology Program (NTP). 1986. Toxicology and Carcinogenesis studies of isophorone (CAS No. 78-59-1) in F344/N rats and B6C3F1 mice (gavage studies). NTP Technical Report Series No. 291. DHHS (NIH) 86-2547.

4-Methylphenol (P-Cresol)

Deichmann, W.B., and Keplinger, M.L. 1981. Phenols and phenolic compounds. In Clayton, G., and Clayton, F., eds. Patty's Industrial Hygiene and Toxicology. 3rd ed. John Wiley and Sons, New York. Vol. 2A, pp. 2597-2601.

Environmental Protection Agency (EPA). 1984. Health Effects Assessment for Creosols. Environmental Criteria and Assessment Office, Cincinnati, Ohio, and Office of Emergency and Remedial Response, Washington, D.C. September 1984. EPA/540/1-86-050.

Environmental Protection Agency (EPA). 1986. o,m,p-Creosol. 90-Day Oral Subchronic Toxicity Studies in Rats. Office of Solid Waste, Washington, D.C.

Environmental Protection Agency (EPA). 1987. o,m,p-Creosol. 90-Day Oral Subchronic Toxicity Studies in Rats. Office of Solid Waste, Washington, D.C.

Environmental Protection Agency (EPA). 1991. integrated Risk Information System (IRIS). Environmental Criteria and Assessment Office, Cincinnati, Ohio. June.

National Institute for Occuptional Safety and Health (NIOSH). Criteria for a Recomended Standard -- Occupational Exposure to Creosol. DHEW, PHS/CDC. U.S. Government Printing Office, Washington, D.C. February 1978.

Presley, J., and Brown, W. 1956. Lysol-induced criminal abortion. Obset. Gynecol. 8:368-370.

Vance, B. 1945. Intrauterine injection of Lysol aws an awbortifacient. Report of a fatal case complicated by oil embolism and Lyson poisoning. Arch. Pathol. 40:395-398.

Nickel

Ambrose et al. 1976. Long-term toxicologic assessment of nickel in rats and dogs. J. Food Sci. Technol. 13:181-187.

Health Effects Assessment (HEA) document-Annual, prepared by the Environmental Criteria and Assessment Office, U.S. Environmental Protection Agency, Cincinnati, Ohio, 1991a.

U.S. Environmental Protection Agency (USEPA). 1991. Integrated Risk Information System (IRIS). Environmental Criteria and Assessment Office. Cincinnati, Ohio. June.

U.S. Environmental Protection Agency (USEPA). 1986. Health Assessment Document for Nickel and Nickel compounds. Office of Health and Environmental Assessment, Research Triangle Park, North Carolina, USEPA 600/8-83-012FF.

U.S. Environmental Protection Agency (USEPA). 1987, Health Advisory for Nickel. Office of Drinking Water, Washington, D.C., March 31, 1987.

Nitrobenzene

Nitrobenzene

Arena, J.M. 1974. Poisoning: Toxicology-symptoms treatments, Third edition, Springfield, Illinois: Charles C. Thomas, p. 686.

Bond, J.A. et al. 1981. Fundamental applications of toxicology. 1(5):389-94.

Browning, E. 1965. Toxicity and metabolism of industrial solvents. New York: American Elsevier, p.229.

Chemical Industry Institute of Toxicology (CIIT). 1984. Ninety- day inhalation toxicity study of nitrobenzene in F344 rats and B6C3F1 mice. Research Triangle Park, North Carolina, FYI-OTS-0874-0333.

Gosselin, R.E., Smith, R.P. and Hodge, H.C. 1984. Clinical toxicology of commercial products, Fifth edition, Williams and Wilkins, Baltimore, Maryland,II-214.

International Labour Office. 1983. Encyclopedia of occupational health and safety, vols.I,II, Geneva, Switzerland: International Labour Office, p. 1448.

Lareng, L. et al. 1974. Eur. J. Toxicol. Environ. Hyg. 7(1): 12- 6.

National Research Council. 1981. Drinking water and health, vol. 4, National Academy Press, Washington, DC. p.225.

U.S. Environmental Protection Agency (USEPA). 1991. Integrated Risk Information System (IRIS), Environmental Criteria and Assessment Office, Cincinnati, Ohio. June.

U.S. Environmental Protection Agency (USEPA). 1991a. Health Effects Assessment Summary Tables-Annual. Office of Emergency and Remedial Response. Washington, D.C.

N-Nitrosodiphenylamine

International Agency for Research on Cancer (IARC). 1972-1985. Monographs on the Evaluation of the Carcinogenic Risks of Chemicals to Man. Geneva: World Health Organization. V27:217, 220.

Kuroki, T. et al. 1977. Microsome-mediated mutagenesis in V79 Chinese hamster cells by various nitrosamines. Cancer. Res. 37(4) 1044.

Tatsumi, K. and Yamada, H. 1982. Reduction of N- nitrosodiphenylamine to the corresponding hydrazine by guinea pig liver prUSEPArations. Chem. Pharm. Bull. 30(10) 3842.

Wakabayashi, K. et al. 1982. Mechanism of appearance of mutagenicity of N-nitrosodiphenylamine with norharman. IARC Sci. Publ. 41:695.

Williams, G.M. and Weisburger, J.H. 1986. Chemical Carcinogens, In: Doull, J., Klaassen, C.D., and Amdur, M.O., (eds.) Casarett and Doull's Toxicology: The Basic Science of Poisons. Third Edition, Macmillan Publishing Co., New York. pp. 117-121.

Environmental Protection Agency (USEPA). 1991 Integrated Risk Information System (IRIS). Environmental Criteria and Assessment Office. Cincinnati, Ohio. June

N-Nitrosodi-n-Propylamine

ASTDR. 1988. Draft Toxicological Study for n-Niotrosodi-n- propylamine; Agency for Toxic Substances and Disease Registry; U.S. Public Health Service. December 1988.

Druckery, H., R. Pruessman, S. Ivankovic, et al. 1967. Organothorpic Carcinogenic effects of 65 Different N-nitroso Compounds on BD rats. Z. Krebsforsch 69:103-201.

U.S. Environmental Protection Agency (USEPA). 1991. Integrated Risk Information System (IRIS). Environmental Criteria and Assessment Office. Cincinnati, Ohio. June.

Pentachlorophenol

Armstrong, R. W., Eichner, E. R., Klein, D. E. et al. 1969. Pentachlorophenol poisoning in a nursery for newborn infants. II. Epidemiologic and toxicologic studies. J. Pediatr. 75(2): 317-325.

Begley, J., Reichert, E. L., Rashad, M. N. and Klemmer, H. W. 1977. Association between renal function tests and pentachlorophenol exposure. Clin. Toxicol. 11:97-106.

Bergner, H., Constantinidis , P. and Martin, J. H. 1965. Industrial pentachlorophenol poisoning in Winnipeg. Can. Med. Assoc. J. 92:448-451.

Braun, W. H., Young J. D., Blau, G. E. and Gehring, P. J. 1977. The pharmacokinetics and metabolism of pentachlorophenol in rats. Toxicol. Appl. Pharmacol. 41:395.

Chapman, J. B. and Robson, P. 1965. Pentachlorophenol poisoning from bath water. Lancet. 1:1266-1267.

Dow Chemical Company. 1969. Antimicrobial Agents. Dowicide 2 Antimicrobial. Available from the Dow Chemical Co., Midland, MI 48640.

Environmental Protection Agency (USEPA). 1985. Draft Health Advisory for Pentachlorophenol. Office of Drinking Water. Washington, D. C. September 30, 1985.

Environmental Protection Agency (USEPA). 1991. Integrated Risk Information System (IRIS). Environmental Criteria and Assessment Office. Cincinnati, Ohio. June.

Gordon, D. 1956. How dangerous is pentachlorophenol? Med. J. Australia. 43(2): 485-488.

Grimm, H. G., Schellmann, B., Schaller, K. H. and Gosseler, K. 1981. Pentachlorophenol concentrations in tissues and body fluids of normal persons. Zentralbl. Bakteriol., Mikrobiol. Hyg., Abt. 1, Orig. B. 174(1-2):77-90. (Ger.).

Jakobson, I. and Yllner, S. 1971. Metabolism of 14 C-pentachlorophenol in the mouse. Acta. Pharmacol. Toxicol. 29:513.

Klaassen, C. D., Amdur, M. O. and Doull, J. (eds.), 1986. Casarett and Doull's Toxicology: The Basic Science of Poisons. Third Edition, Macmillan Publishing Co., New York.

Klemmer, H. W., Wong, L., Sato, M. M., Reichert, E. L., Korsak, R. J. and Rashad, M. N. 1980. Clinical findings in workers exposed to pentachlorophenol. Arch. Environ. Contam. Toxicol. 9(6): 715-725.

Robson, A. M., Kissane, J. M., Elvick, N. H. and Pundavela, L. 1969. Pentachlorophenol poisoning in a nursery for newborn infants. I. Clinical features and treatment. J. Pediatr. 75:309-316.

Phenol

American Conference of Governmental Industrial Hygienists (ACGIH). 1983. Threshold limit values for chemical substances and physical agents in the workroom environment with intended changes for 1983-1984. ACGIH, Cincinnati, Ohio.

Environmental Protection Agency (USEPA). 1980. Ambient Water Quality Criteria for Phenol. Office of Water Regulations and Standards, Criteria and Standards Division, Washington, D.C. October 1980. USEPA 440/5-80-066.

Environmental Protection Agency (USEPA). 1984. Health Effects Assessment for Phenol. Environmental Criteria and Assessment Office, Cincinnati, Ohio. September 1984. USEPA 540/1-86-007.

Environmental Protection Agency (USEPA). 1991. Integrated Risk Information System (IRIS). Environmental Criteria and Assessment Office. Cincinnati, Ohio. June.

Polychlorinated Biphenyls (PCBs)

Environmental Protection Agency (USEPA). 1985. Drinking Water Criteria Document for Polychlorinated Biphenyls (PCBs). Environmental Criteria and Assessment Office. Cincinnati, Ohio, ECAO-CIN-414, USEPA-600/X-84-198. April.

Environmental Protection Agency (USEPA). 1986. Development of Advisory Levels for Polychlorinated Biphenyls (PCBs) Cleanup. Report prUSEPAred by the Office of Health and Environmental Assessment, Exposure Assessment Group for the Office of Emergency and Remedial Response, Washington, D.C. USEPA 600/6- 86/002, NTIS PB86 232 774.

Environmental Protection Agency (USEPA). 1988. Drinking Water Criteria Document for Polychlorinated Biphenyls (PCBs). Final document, prUSEPAred for the Office of Drinking Water. Cincinnati. Environmental Criteria and Assessment Office, Office of Health and Environmental Assessment. ECAO-CIN-414.

Environmental Protection Agency (USEPA). 1991. Integrated Risk Information System (IRIS). Environmental Criteria and Assessment Office. Cincinnati, Ohio. June.

Gosselin, R. et al. 1984. Clinical Toxicology of Commercial Products, 5th edition. Williams & Wilkins, Baltimore.

Norback, D. and Weltman, R. 1985. Polychlorinated biphenyl induction of hepatocellular carcinoma in the Sprague-Dawley rat. Environ. Health Perspect. 60:97-105.

Polycyclic Aromatic Hydrocarbons (PAHs)

Agency for Toxic Substances and Disease Registry (ATSDR). 1987. Toxicological Profile for Benzo(a)pyrene. October 1987.

Kao, J.K., Patterson, F.K. and Hall, J. 1985. Skin penetration and metabolism of topically applied chemicals in six mammalian species including man: An in vitro study with benzo[a]pyrene and testosterone. Toxicol. Appl. Pharmacol., 81:502-516 (as cited in ATSDR 1987).

National Institute for Occupational Safety and Health (NIOSH). 1977. Criteria for a Recommended Standard-Occupational Exposure to Coal Tar Products. DHEW (NIOSH) 78-107.

Neal, J. and Rigdon, R.H. 1967. Gastric tumors in mice fed benzo(a)pyrene: A quantitative study. Tox. Rep. Biol. Med. 25:553-557.

Santodonato, J., Howard, P. and Basu, D. 1981. Health and ecological assessment of polynuclear aromatic hydrocarbons. J. Environ. Pathol. Toxicol. 5:1-364.

Thyssen, J. Althoff, J. Kimmerle, G. and Mohr, U. 1981. Inhalation studies with benzo(a)pyrene in Syrian golden hamsters. J. Natl. Cancer Inst. 66:575-577.

U.S. Environmental Protection Agency (USEPA). 1984a. Health Effects Assessment for Polycyclic Aromatic Hydrocarbons (PAHs). Environmental Criteria and Assessment Office, Cincinnati, Ohio, September 1984. USEPA 540/1-86-013.

U.S. Environmental Protection Agency (USEPA). 1984b. Health Effects Assessment for Naphthalene. Environmental Criteria and Assessment Office, Cincinnati, Ohio, September 1984. USEPA 540/1-86-022.

U.S. Environmental Protection Agency (USEPA). 1986. Superfund Public Health Evaluation Manual. Office of Emergency and Remedial Response, Washington, D.C. USEPA 440/5-80-071.

U.S. Environmental Protection Agency (USEPA). 1988. 13-Week mouse oral subchronic toxicity study - fluoranthrene. PrUSEPAred by Toxicity Research Laboratories, Ltd., Muskegon, MI for the Office of Solid Waste, Washington, D.C.

U.S. Environmental Protection Agency (USEPA). 1988a. Health Effects Assessment for Naphthalene. Prepared by the Office of Health and Environmental Assessment, Environmental Criteria and Assessment Office. Cincinnati, Ohio for the Office of Emergency and Remedial Response, Washington, D.C.

U.S. Environmetal Protection Agency (USEPA). 1989. Mouse oral subchronic toxicity of pyrene. Study conducted by Toxicity Research Laboratories, Muskegon, MI for the Office of Solid Waste, Washington, D.C.

U.S. Environmental Protection Agency (USEPA). 1989. Subchronic toxicity in mice with anthracene. Final report. Hazelton Laboratories America, Inc. Prepared for the Office of Solid Waste, Washington, D.C.

U.S. Environmental Protection Agency (USEPA). 1991. Integrated Risk Information System (IRIS), Environmental Criteria and Assessment Office, Cincinnati, Ohio. June.

U.S. Environmental Protection Agency (USEPA). 1991a. Health Effects Assessment Summary Tables (HEAST)-Annual. Office of Emergency and Remedial Response. Washington, D.C.

1,1,2,2-Tetrachloroethane

Horiuchi, K., Horiguchi, K., Kadowaki, K., and Aratake, K. 1962. Studies on the industrial tetrachloroethane poisoning. Osaka City Med. J. 8:29-38.

Navrotskiy, V.F., Kashin, L.M., Kulinskaya, I.L. et al. 1971. Comparative assessment of the toxicity of a number of industrial poisons when inhaled in low concentrations for prolonged periods. Trudy S'ezda Gigenistov Ukranisoi. 8:224-226 (Russian).

National Cancer Institute (NCI). 1978. Bioassay of 1,1,2,2-trichloroethane for Possible Carcinogenicity. NCI Tech. Rep. Ser. No. 27.

Schmidt, P., Binnewies, S., Gohlke, R., and Rothe, R. 1972. Subacute action of low concentrations of chlorinated ethanes on rats with and without additional ethanol treatment. I. Biochemical and toxicometric aspects, especially results in subacute and chronic toxicity studies with 1,1,2,2-Tetrachloroethane. Int. Arch. Arbeitsmed. 30:283-298. (German).

U.S. Environmental Protection Agency (EPA). 1984. Health Effects Assessment of 1,1,2,2-tetrachloroethane. Environmental Criteria Assessment Office, Cincinnati, Ohio. September 1984. EPA 540/1-86-032.

U.S. Environmental Protection Agency (EPA). 1988. Integrated Risk Information System (IRIS). Environmental Criteria and Assessment Office, Cincinnati, Ohio.

Tetrachloroethene

Buben, J.A., and O'Flaherty, E.J. 1985. Delineation of the role of metabolism in the hepatotoxicity of trichloro- ethylene and perchloroethylene: A dose-effect study. Toxicol. Appl. Pharmacol. 78:105-122.

Environmental Protection Agency (USEPA). 1985a. Health Assessment Document for Tetrachloroethylene (Perchloroethylene). Office of Health and Environmental Assessment, Washington, D.C. July 1985. USEPA 600/8-82-003F.

Environmental Protection Agency (USEPA). 1985b. Drinking Water Criteria Document for Tetrachloroethylene. Office of Drinking Water. Washington, D.C. September 1985.

Environmental Protection Agency (USEPA). 1986. Superfund Public Health Evaluation Manual. Office of Emergency and Remedial Response, Washington, D.C. USEPA 540/1-86-060.

Environmental Protection Agency (USEPA). 1991. Integrated Risk Information System (IRIS). Environmental Criteria and Assessment Office, Cincinnati, Ohio. June.

Environmental Protection Agency (USEPA). 1991a. Health Effects Assessment Summary Tables (HEAST)-Annual. Office of Solid Waste and Emergency Response, Washington, D.C.

International Agency for Research on Cancer (IARC). 1979. IARC Monographs on the Evaluation of the Carcinogenic Risks of Chemicals to Humans. Some Halogenated Hydrocarbons. World Health Organization, Lyon, France. Vol. 20.

National Cancer Institute (NCI). 1977. Bioassay of Tetrachloro- ethylene for Possible Carcinogenicity. Cas. No. 127-18-4. NCI Carcinogenesis Technical Report Series No. 13. Washington, D.C. DHEW (NIH) publication No. 77-813.

National Toxicology Program (NTP). 1986. Toxicology and Car- cinogenesis Studies of Tetrachloroethylene (Perchloro- ethylene) (Cas No. 127-18-4) in F344/N Rats and B603F2 Mice (Inhalation Studies). NTP Technical Report Series No. 311. Research Triangle Park, North Carolina. DHEW (NIH) Publication No. 86-2567.

Rowe, V.K., McCollister, D.D., Spencer, H.C., Adams, E.M. and Irish, D.D. 1952. Vapor toxicity of tetrachloroethylene for laboratory animals and human subjects. AMA Arch. Ind. Hyg. Occup. Med. 5:566-579.

Schwetz, B.A., Leong, B.K.J., and Gehring, P.J. 1975. The effect of maternally inhaled trichloroethylene, perchloroethylene, methyl chloroform, and methylene chloride on embryonal and fetal development in mice and rats. Toxicol. Appl. Pharmacol. 55:207-219.

Stewart, R.D., Gay, H.H., Erley, D.S., Hake, C.L. and Schaffer, A.W. 1961. Human exposure to tetrachloroethylene vapor. Arch. Environ. Health. 20:516-522.

Stewart, R.D., Barretta, E.D., Dodd, H.C., Torkelson, T.R. 1970. Experimental human exposure to tetrachloroethylene. Arch. Environ. Health. 20:224-229.

Stewart, R.D., Hake, C.L., Forster, H.V., Lebrun, A.J., Peterson, J.F. and Wu, A. 1974. Tetrachlorethylene: Development of a biologic standard for the industrial worker by breath analysis. Report No. NIOSH-MCOW-ENUM-PCE-74-6, Medical College of Wisconsin, Milwaukee, Wisconsin.

Toluene

Hanninen, H., Eskelinin, L., Husman, K. and Nurmineen, M. 1976. Behavioral effects of long-term exposure to a mixture of organic solvents. Scand. J. Work Environ. Health 2:240-255 (as cited in USEPA 1987).

Kimura, E.T., Ebert, D.M., and Dodge, P.W. 1971. Acute toxicity and limits of solvent residue for sixteen organic solvents. Toxicol. Appl. Pharmacol. 19:699-704.

U.S. Environmental Protection Agency (USEPA). 1985. Drinking Water Criteria Document for Toluene. Final Draft, Office of Drinking Water, Washington, D.C., March 1985.

U.S. Environmental Protection Agency (USEPA). 1987. Health Advisory for Toluene. Office of Drinking Water, Washington, D.C., March 1987.

Environmental Protection Agency (USEPA). 1991. Integrated Risk Information System (IRIS). Environmetal Criteria and Assessment Office. Cincinnati, Ohio. June.

Environmental Protection Agency (USEPA). 1991a. Health Effects Assessment Summary Tables (HEAST)-Annual. Office of Solid Waste and Emergency Response, Washington, D.C.

Van Oettingen, W.F., Neal, P.A. and Donahue, D.D. et al. 1942a. The toxicity and potential dangers of toluene, with special references to its maximal permissible concentra- tions. U.S. Public Health Service Pub., Bull. No. 279, p. 50.

Van Oettingen, W.F., Neal, P.A. and Donahue, D.D. et al. 1942b. The toxicity and potential dangers of toluene - Preliminary report. J. Am. Med. Assoc. 118:579-584.

1,1,1-Trichloroethane

Adams et al. 1950. Vapor toxicity of 1,1,1-trichloroethane (methyl chloroform) deClement Associates, Inc. 1985. Chemical, physical and biological properties of compounds present at hazardous waste sites. Final Report, September 1985.

National Cancer Institute (NCI). 1977. Bioassay of 1,1,1-trichloroethane for possible carcinogenicity. CAS No. 71-55-6, NCI Carcinogenesis Technical Report Series No. 3, Washington, D.C., DHEW Publications No. (NIH) 77-803.

National Toxicology Program (NTP). 1984. Annual plan for fiscal year 1984. Research Triangle Park, North Carolina, DHHS Public Health Service, NTP-84-023.

Torkelson, T.R., Oyen, F., McCollister, D.D. and Rowe, V.K. 1958. Toxicity of 1,1,1-trichloroethane as determined on laboratory animals and human subjects. Am. Ind. Hyg. Assoc. J. 19:356-362.

U.S. Environmental Protection Agency (USEPA). 1980. Ambient Water Quality Criteria fortermined by experiments on laboratory animals. Arch. Ind. Hyg. Occup. Med. 1:225-236.

Chlorinated Ethanes. Office of Water Regulations and Standards, Criteria and Standards Division, Washington, D.C., October 1980. USEPA 440/5-80-029.

U.S. Environmental Protection Agency (USEPA). 1991. Integrated Risk Information System (IRIS). Environmental Criteria and assessment Office. Cincinnati, Ohio. June.

U.S. Environmental Protection Agency (USEPA). 1991a. Health Effects Assessment SummEnvironmental Protection Agency (USEPA). 1991. Integrated Risk Information System (IRIS). Environmental Criteria and Assessment Office. Cincinnati, Ohio. June.

Fukuda, K. et al. 1983. Inhalation carcinogenicity of trichloroethylene in mice and rats. Ind. Health 21:243-254.

Maltoni, C., Lafemine, G. and Cotti, G. 1986. Experimental research on trichloroethylene carcinogenesis. Arch. Res. Industrial Carcinogenesis Series. Maltoni, C., Mehlman, M.A. Eds. Vol. V Princeton Scientific Publishing Co., Inc. Princeton, N.J. p. 393.

National Cancer Institute (NCI). 1976. Carcinogenesis Bioassay of Trichloroethylene. NCI Carcinogenesis Technical Report Series No. 2. DHEW No. NIH 76-802.

Nationalary Tables-Annual. Environmental Criteria and Assessment Office, Cincinnati, Ohio.

Trichloroethene

Toxicology Program (NTP). 1983. Carcinogenesis bioassay of trichloroethylene. NTP Technical Report Series No. 243 NIH 83-1799.

Vanadium

Carlton, B.D., Beneke, M.B. and Fisher, G.L. 1982. Environ. Res. 49:256-262. (Cited in Lagerkvist et al., 1986).

Carson, B.L., Ellis III, M.V. and McCann, J.L. 1986. Vanadium. In: Toxicology and Biological Monitoring of Metals in Humans Including Feasibility and Need. Lewis Publishers, Inc. Chelsea, MI. Pp. 276.

Environmental Protection Agency (USEPA). 1991a. Health Effects Assessment Summary Tables-Annual. Office of Emergency and Remedial Response. Washington, D.C.

Goyer, R.A. 1986. The Toxic Effects of Metals. In: Eds. C.D. Klaassen, M.O. Amdur, and J. Doull. Toxicology, The Basic Science of Poisons. 3rd Edition. Ch. 19. MacMillan. New York.

International Commission on Radiological Protection (ICRP). 1960. ICRP Publ 2. (Cited in Lagerkvist, 1986).

Kiviluoto, M., Pyy, L. and Pakarinen, A. 1980. Int. Arch. Occup. Environ. Health. 46:179-182. (Cited in Lagerkvist et al., 1986).

Lagerkvist, B., Nordberg, G.F. and Vouk, V. 1986. Vanadium. In: Eds. L. Freiberg, G.F. Nordberg and V. Vouk. Handbook on the Toxicology of Metals. 2nd Edition. Elsevier. Amsterdam. Pp. 638-663.

National Academy of Science (NAS). 1977. Drinking Water and Health. National Academy of Science, Washington, D.C. p. 298. (Cited in Carson et al., 1986).

Schroeder, et al. 1970. Zirconium, niobium, antium, antimony, vanadium and lead in rats: Lifetime studies. J. Nutr.: 100(1): 59-68.

Wide, M. 1984. Environ. Res. 33:47-53. (Cited in Lagerkvist et al., 1986).

Xylenes

Bowers, D.E. Jr., Cannon, M.S. and Jones, D.H. 1982. Ultrastructural changes in livers of young and aging rats exposed to methylated benzenes. Am. J. Vet. Res. 43:679-683.

Carpenter, C.P., Kinkead, E.R., Geary, D.L. Jr., Sullivan, L.J. and King, J.M. 1975. Petroleum hydrocarbon toxicity studies: V. Animal and human response to vapors and mixed xylenes. Toxicol. Appl. Pharmacol. 33:543-558.

Hake et al. 1981. Development of a biologic standard for the industrial worker by breath analysis. NIOSH-MCOW-ENHM-xy- 77-3. NTIS PB82-152844.

Health Effects Assessment (HEA) document-Annual, prepared by the Environmental Criteria and Assessment Office, U.S. Environmental Protection Agency, Cincinnati, Ohio, 1991a.

Maltoni, C., Conti, B., Cotti, G. and Belpoggi, F. 1985. Experimental studies on benzene carcinogenicity at the Bologna institute of Oncology: Current results and ongoing research. Am. J. Ind. Med. 7:415-416.

Mirkova, E., Anton, G., Mikhailkova, A., Khinkova, L. and Benchev, I.V. 1983. Prenatal toxicity to xylene. J. Hyg, Epidemiol. Microbiol. Immunol. 27:337-343.

National Toxicity Program (NTP). 1986. Toxicology and Carcinogenesis Studies of Xylenes (Mixed) [60% m-Xylene, 14% p-Xylene, 9% o-Xylene, 17% Ethylbenzene] in F344/N Rats and B6C3F1 Mice (Gavage Studies), December 1986, NTP TR 327.

Savolainen, K., Rinthmaki, V., Seppalainen, A.M. and Linnoila, M. 1980. Effects of short-term m-xylene exposure and physical exercise in the central nervous system. Int. Arch. Occup. Environ. Health. 37:205-217.

Tatrai, E., Ungvary, G., and Cseh, I.R. 1981. The effect of long-term inhalation of o-xylene on the liver. Ind. Environ. Xenobiotics Proc. Int. Conf. pp. 293-300.

U.S. Environmental Protection Agengy (USEPA). 1985. Drinking Water Criteria Document for Xylenes. Final Draft, Environmental Criteria and Assessment Office, Cincinnati, Ohio, March 1985. ECAO-CIN-416. USEPA 600/X-84-185-1.

U.S. Environmental Protection Agency (USEPA). 1987. Health Advisory for Xylenes. Office of Drinking Water, Washington, D.C. March 1987.

U.S. Environmental Protection Agency (USEPA). 1991. Integrated Risk Information System (IRIS). Environmental Criteria and Assessment Office. Cincinnati, Ohio. June.

Zinc

Hammond, P.B. and Beliles, R.P. 1980. Metals, In: Doull, J., Klaassen, C.D., and Amdur, M.O., (eds.) Casarett and Doull's Toxicology: The Basic Science of Poisons, Second Edition, Macmillan Publishing Co., New York, pp. 409-467.

Health Effects Assessment (HEA) document-Annual, prepared by the Environmental Criteria and Assessment Office, U.S. Environmental Protection Agency, Cincinnati, Ohio, 1991a.

Heptachlor

ASTDR. 1987. Toxicological Profile for Heptachlor/Heptachlor Epoxide Draft. Agency for Toxic Substances and Disease Registry. U.S. Public Health Service.

APPENDIX C

APPENDIX C
RESULTS OF RISK CALCULATIONS

TABLE C-1

GROUNDWATER INGESTION PATHWAY - RESIDENTIAL USE

HOOKER/RUCO SITE - FUTURE-USE SCENARIO

RISKS TO RESIDENTS

CARCINOGENS - REASONABLE MAXIMUM GROUNDWATER INGESTION EXPOSURE: Adults

Chronic Daily Intake (mg/kg-day) = Water Conc X Intake X Bioavail. Factor X 1 / Body Wt. X Years Exposed / Years Lifetime X Days Exposed/Year / Days/Year

Chronic Daily Intake (mg/kg-day) = mg/L X 2.0 l/day X 1.0 X 1 / 70 kg X 30 yrs / 70 yrs X 350 days / 365 days

Compound	Water Conc(mg/L)	Intake (l/day)	Bioavail. Factor	Body Wt (kg)	Years Exposed / Years Lifetime	Days Exposed/Year / Days/Year	CDI	SF (mg/kg-day)^-1	RISK CDI*SF
Chloromethane	2.90E-04	2.0	1.0	70	4.29E-01	9.59E-01	3.41E-06	1.30E-02	4.43E-08
Tetrachloroethene	9.80E-02	2.0	1.0	70	4.29E-01	9.59E-01	1.15E-03	5.10E-02	5.87E-05
Trichloroethene	6.15E-03	2.0	1.0	70	4.29E-01	9.59E-01	7.22E-05	1.10E-02	7.94E-07
Vinyl Chloride	6.85E-02	2.0	1.0	70	4.29E-01	9.59E-01	8.05E-04	1.90E+00	1.53E-03
Benzene	7.00E-05	2.0	1.0	70	4.29E-01	9.59E-01	8.22E-07	2.90E-02	2.38E-08
Bis(2-ethylhexyl)phthalate	4.75E-03	2.0	1.0	70	4.29E-01	9.59E-01	5.57E-05	1.40E-02	7.80E-07
Heptachlor Epoxide	1.50E-05	2.0	1.0	70	4.29E-01	9.59E-01	1.76E-07	9.10E+00	1.60E-06
Arsenic	2.68E-02	2.0	1.0	70	4.29E-01	9.59E-01	3.15E-04	1.75E+00	5.52E-04
Beryllium	1.35E-03	2.0	1.0	70	4.29E-01	9.59E-01	1.58E-05	4.30E+00	6.80E-05
								TOTAL RISK=	2.21E-03

TABLE C-1

GROUNDWATER INGESTION PATHWAY - RESIDENTIAL USE
HOOKER/RUCO SITE - FUTURE-USE SCENARIO
RISKS TO RESIDENTS

CARCINOGENS - REASONABLE MAXIMUM GROUNDWATER INGESTION EXPOSURE: Children - 6 years of exposure

Chronic Daily Intake (mg/kg-day) = Water Conc X Intake X Bioavail. Factor X 1 / Body Wt. X Years Exposed / Years Lifetime X Days Exposed/Year / Days/Year

Chronic Daily Intake (mg/kg-day) = mg/L X 2.0 l/day X 1.0 X 1 / 35 kg X 6 yrs / 70 yrs X 350 days / 365 days

Compound	Water Conc(mg/L)	Intake (l/day)	Bioavail. Factor	Body Wt (kg)	Years Exposed / Years Lifetime	Days Exposed/Year / Days/Year	CDI	SF (mg/kg-day)^-1	RISK CDI*SF
Chloromethane	2.90E-04	2.0	1.0	35	8.57E-02	9.59E-01	1.36E-06	1.30E-02	1.77E-08
Tetrachloroethene	9.80E-02	2.0	1.0	35	8.57E-02	9.59E-01	4.60E-04	5.10E-02	2.35E-05
Trichloroethene	6.15E-03	2.0	1.0	35	8.57E-02	9.59E-01	2.89E-05	1.10E-02	3.18E-07
Vinyl Chloride	6.85E-02	2.0	1.0	35	8.57E-02	9.59E-01	3.22E-04	1.90E+00	6.12E-04
Benzene	7.00E-05	2.0	1.0	35	8.57E-02	9.59E-01	3.29E-07	2.90E-02	9.53E-09
Bis(2-ethylhexyl)phthalate	4.75E-03	2.0	1.0	35	8.57E-02	9.59E-01	2.23E-05	1.40E-02	3.12E-07
Heptachlor Epoxide	1.50E-05	2.0	1.0	35	8.57E-02	9.59E-01	7.05E-08	9.10E+00	6.41E-07
Arsenic	2.68E-02	2.0	1.0	35	8.57E-02	9.59E-01	1.26E-04	1.75E+00	2.21E-04
Beryllium	1.35E-03	2.0	1.0	35	8.57E-02	9.59E-01	6.32E-06	4.30E+00	2.72E-05
								Total Risk =	8.84E-04

TABLE C-1
GROUNDWATER INGESTION PATHWAY - RESIDENTIAL USE
HOOKER/RUCO SITE - FUTURE-USE SCENARIO
RISKS TO RESIDENTS

NONCARCINOGENS - REASONABLE MAXIMUM GROUNDWATER INGESTION EXPOSURE: Adults

Chronic Daily Intake (mg/kg-day) = Water Conc X Intake X Bioavail. Factor X 1 / Body Wt. X Days Exposed/Year / Days/Year

Chronic Daily Intake (mg/kg-day) = mg/L X 2.0 l/day X 1.0 X 1 / 70 kg X 350 days / 365 days

Compound	Water Conc(mg/L)	Intake (l/day)	Bioavail. Factor	Body Wt (kg)	Days Exposed/Year / Days/Year	CDI	RfD (mg/kg-day)	CDI\RfD
Chlorobenzene	1.00E-04	2.0	1.0	70	9.59E-01	2.74E-06	2.00E-02	1.37E-04
Tetrachloroethene	9.80E-02	2.0	1.0	70	9.59E-01	2.68E-03	1.00E-02	2.68E-01
Trans-1,2-Dichloroethene	5.40E-02	2.0	1.0	70	9.59E-01	1.48E-03	2.00E-02	7.40E-02
4-Methyl-2-pentanone	1.02E-02	2.0	1.0	70	9.59E-01	2.79E-04	5.00E-02	5.58E-03
Acetone	1.00E-02	2.0	1.0	70	9.59E-01	2.74E-04	1.00E-01	2.74E-03
2-Butanone	3.00E-03	2.0	1.0	70	9.59E-01	8.22E-05	5.00E-02	1.64E-03
Carbon Disulfide	2.72E-03	2.0	1.0	70	9.59E-01	7.45E-05	1.00E-01	7.45E-04
Ethylbenzene	2.90E-04	2.0	1.0	70	9.59E-01	7.95E-06	1.00E-01	7.95E-05
Total Xylenes	9.70E-04	2.0	1.0	70	9.59E-01	2.66E-05	2.00E+00	1.33E-05
Bis(2-ethylhexyl)phthalate	4.75E-03	2.0	1.0	70	9.59E-01	1.30E-04	2.00E-02	6.50E-03
Heptachlor Epoxide	1.50E-05	2.0	1.0	70	9.59E-01	4.11E-07	1.30E-05	3.16E-02
Antimony	1.95E-02	2.0	1.0	70	9.59E-01	5.34E-04	4.00E-04	1.33E+00
Arsenic	2.68E-02	2.0	1.0	70	9.59E-01	7.35E-04	3.00E-04	2.45E+00
Barium	7.53E-02	2.0	1.0	70	9.59E-01	2.06E-03	7.00E-02	2.95E-02
Beryllium	1.35E-03	2.0	1.0	70	9.59E-01	3.69E-05	5.00E-03	7.38E-03
Cadmium	3.64E-03	2.0	1.0	70	9.59E-01	9.97E-05	5.00E-04	1.99E-01
Chromium (III)	9.91E-03	2.0	1.0	70	9.59E-01	2.72E-04	1.00E+00	2.72E-04
Chromium (VI)	1.42E-03	2.0	1.0	70	9.59E-01	3.88E-05	5.00E-03	7.76E-03
Manganese	1.47E+00	2.0	1.0	70	9.59E-01	4.03E-02	1.00E-01	4.03E-01
Nickel	1.50E-02	2.0	1.0	70	9.59E-01	4.12E-04	2.00E-02	2.06E-02
Selenium	2.42E-03	2.0	1.0	70	9.59E-01	6.64E-05	5.00E-03	1.33E-02
Silver	1.41E-03	2.0	1.0	70	9.59E-01	3.85E-05	3.00E-03	1.28E-02
Vanadium	4.27E-03	2.0	1.0	70	9.59E-01	1.17E-04	7.00E-03	1.67E-02
Zinc	3.09E-02	2.0	1.0	70	9.59E-01	8.47E-04	2.00E-01	4.23E-03
							Hazard Index =	4.89E+00

TABLE C-1

GROUNDWATER INGESTION PATHWAY - RESIDENTIAL USE

HOOKER/RUCO SITE - FUTURE-USE SCENARIO

RISKS TO RESIDENTS

NONCARCINOGENS - REASONABLE MAXIMUM GROUNDWATER INGESTION EXPOSURE: Children

Chronic Daily Intake (mg/kg-day) = Water Conc X Intake X Bioavail. Factor X 1 / Body Wt. X Days Exposed/Year / Days/Year

Chronic Daily Intake (mg/kg-day) = mg/L X 2.0 l/day X 1.0 X 1 / 35 kg X 350 days / 365 days

Compound	Water Conc(mg/L)	Intake (l/day)	Bioavail. Factor	Body Wt (Kg)	Days Exposed/Year / Days/Year	CDI	RfD (mg/kg-day)	CDI/RfD
Chlorobenzene	1.00E-04	2.0	1.0	35	9.59E-01	5.71E-06	2.00E-02	2.86E-04
Tetrachloroethene	9.80E-02	2.0	1.0	35	9.59E-01	5.60E-03	1.00E-02	5.60E-01
Trans-1,2-Dichloroethene	5.40E-02	2.0	1.0	35	9.59E-01	3.09E-03	2.00E-02	1.54E-01
4-Methyl-2-pentanone	1.02E-02	2.0	1.0	35	9.59E-01	5.82E-04	5.00E-02	1.16E-02
Acetone	1.00E-02	2.0	1.0	35	9.59E-01	5.71E-04	1.00E-01	5.71E-03
2-Butanone	3.00E-03	2.0	1.0	35	9.59E-01	1.71E-04	5.00E-02	3.43E-03
Carbon Disulfide	2.72E-03	2.0	1.0	35	9.59E-01	1.55E-04	1.00E-01	1.55E-03
Ethylbenzene	2.90E-04	2.0	1.0	35	9.59E-01	1.66E-05	1.00E-01	1.66E-04
Total Xylenes	9.70E-04	2.0	1.0	35	9.59E-01	5.54E-05	2.00E+00	2.77E-05
Bis(2-ethylhexyl)phthalate	4.75E-03	2.0	1.0	35	9.59E-01	2.71E-04	2.00E-02	1.36E-02
Heptachlor Epoxide	1.50E-05	2.0	1.0	35	9.59E-01	8.57E-07	1.30E-05	6.59E-02
Antimony	1.95E-02	2.0	1.0	35	9.59E-01	1.11E-03	4.00E-04	2.78E+00
Arsenic	2.68E-02	2.0	1.0	35	9.59E-01	1.53E-03	3.00E-04	5.11E+00
Barium	7.53E-02	2.0	1.0	35	9.59E-01	4.30E-03	7.00E-02	6.14E-02
Beryllium	1.35E-03	2.0	1.0	35	9.59E-01	7.69E-05	5.00E-03	1.54E-02
Cadmium	3.64E-03	2.0	1.0	35	9.59E-01	2.08E-04	5.00E-04	4.16E-01
Chromium (III)	9.91E-03	2.0	1.0	35	9.59E-01	5.66E-04	1.00E+00	5.66E-04
Chromium (VI)	1.42E-03	2.0	1.0	35	9.59E-01	8.09E-05	5.00E-03	1.62E-02
Manganese	1.47E+00	2.0	1.0	35	9.59E-01	8.40E-02	1.00E-01	8.40E-01
Nickel	1.50E-02	2.0	1.0	35	9.59E-01	8.58E-04	2.00E-02	4.29E-02
Selenium	2.42E-03	2.0	1.0	35	9.59E-01	1.38E-04	5.00E-03	2.77E-02
Silver	1.41E-03	2.0	1.0	35	9.59E-01	8.03E-05	3.00E-03	2.68E-02
Vanadium	4.27E-03	2.0	1.0	35	9.59E-01	2.44E-04	7.00E-03	3.49E-02
Zinc	3.09E-02	2.0	1.0	35	9.59E-01	1.77E-03	2.00E-01	8.83E-03
							Hazard Index =	1.02E+01

TABLE C-2

INHALATION OF VOLATILE CONTAMINANTS IN GROUNDWATER WHILE SHOWERING

HOOKER/RUCO SITE - FUTURE-USE SCENARIO

RISKS TO RESIDENTS

* These parameters were used to calculate the contaminant intake in mg/day based on a model of volatile inhalation exposure while showering by Foster and Chrostowski, 1987.

CARCINOGENS - REASONABLE MAXIMUM GROUNDWATER INHALATION EXPOSURE WHILE SHOWERING : Adults

Scenario Parameters:

Shower Frequency = 1/day

Shower Room Vol.* (m^3) = 12.0

Droplet Diam.* (mm) = 1.0

Shower Water Flow Rate* (l/min) = 10.0

Bathroom Air Exchange Rate* (exch/hr) = 1.0

Inhalation Rate* (m^3/hr) = 1.4

Shower Water Temp* (C) = 45.0

Droplet Drop Time* (sec) = 2.000

Shower Duration* (min) = 15.0

Time in Room After Shower* (min) = 5.0

Viscosity of Shower Water* (cp) = 0.601

Chronic Daily Intake (mg/k = Contaminant Intake X 1 / Body Wt. X Bioavail. Factor X Days Exposed / Days/Yr X Years Exposed / Years Lifetime

Chronic Daily Intake (mg/k = mg/day X 1 / 70 kg X 1.0 X 350 days / 365 days X 30 yrs / 70 yrs

Compound	Water Conc* (ug/L)	Henry Law Coeff* (atm-m^3/mol-K)	Mass Transfer Coeff* (cm/hr)	Contaminant Intake (mg/day)	Body Wt (kg)	Bio availability Factor	Days Exposed / Days/Yr	Years Exposed / Years Lifetime	CDI	SF	RISK SF*CDI
Chloromethane	2.90E-01	4.00E-02	2.52E+01	1.26E-03	70	1.0	9.59E-01	4.29E-01	7.40E-06	6.30E-03	4.66E-08
Tetrachloroethene	9.80E+01	1.49E-02	1.38E+01	4.22E-01	70	1.0	9.59E-01	4.29E-01	2.48E-03	1.80E-03	4.46E-06
Trichloroethene	6.15E+00	1.03E-02	1.54E+01	2.63E-02	70	1.0	9.59E-01	4.29E-01	1.54E-04	1.70E-02	2.62E-06
Vinyl Chloride	6.85E+01	1.07E-02	2.23E+01	2.93E-01	70	1.0	9.59E-01	4.29E-01	1.72E-03	2.90E-01	4.99E-04
Benzene	7.00E-02	5.43E-03	1.95E+01	2.93E-03	70	1.0	9.59E-01	4.29E-01	1.72E-05	2.90E-02	4.99E-07
										Total Risk =	5.06E-04

TABLE C-2
INHALATION OF VOLATILE CONTAMINANTS IN GROUNDWATER WHILE SHOWERING
HOOKER/RUCO SITE - FUTURE-USE SCENARIO
RISKS TO RESIDENTS

* These parameters were used to calculate the contaminant intake in mg/day based on a model of volatile inhalation exposure while showering by Foster and Chrostowski, 1987.

CARCINOGENS - REASONABLE MAXIMUM GROUNDWATER INHALATION EXPOSURE WHILE SHOWERING : Children

Scenario Parameters:

Shower Frequency = 1/day
Shower Room Vol.* (m^3) = 12.0
Droplet Diam.* (mm) = 1.0
Shower Water Flow Rate* (l/min) = 10.0
Bathroom Air Exchange Rate* (exch/hr) = 1.0
Inhalation Rate* (m^3/hr) = 1.5

Shower Water Temp* (C) = 45.0
Droplet Drop Time* (sec) = 2.000
Shower Duration* (min) = 15.0
Time in Room After Shower* (min) = 5.0
Viscosity of Shower Water* (cp) = 0.601

Chronic Daily Intake (mg/k Contaminant Intake X 1 / Body Wt. X Bioavail. Factor X Days Exposed / Days/Yr X Years Exposed / Years Lifetime

Chronic Daily Intake (mg/k mg/day X 1 / 35 kg X 1.0 X 350 days / 365 days X 3 yrs / 70 yrs

Compound	Water Conc* (ug/L)	Henry Law Coeff* (atm-m^3/mol-K)	Mass Transfer Coeff* (cm/hr)	Contaminant Intake (mg/day)	Body Wt (kg)	Bio availability Factor	Days Exposed Days/Yr	Years Exposed Years Lifetime	CDI	SF	RISK SF*CDI
Chloromethane	2.90E-01	4.00E-02	2.52E+01	1.35E-03	35	1.0	9.59E-01	4.29E-02	1.59E-06	6.30E-03	9.99E-09
Tetrachloroethene	9.80E+01	1.49E-02	1.38E+01	4.52E-01	35	1.0	9.59E-01	4.29E-02	5.31E-04	1.80E-03	9.55E-07
Trichloroethene	6.15E+00	1.03E-02	1.54E+01	2.82E-02	35	1.0	9.59E-01	4.29E-02	3.31E-05	1.70E-02	5.62E-07
Vinyl Chloride	6.85E+01	1.07E-02	2.23E+01	3.14E-01	35	1.0	9.59E-01	4.29E-02	3.69E-04	2.90E-01	1.07E-04
Benzene	7.00E-02	5.43E-03	1.95E+01	3.14E-03	35	1.0	9.59E-01	4.29E-02	3.69E-06	2.90E-02	1.07E-07
										Total Risk =	1.09E-04

TABLE C-2

INHALATION OF VOLATILE CONTAMINANTS IN GROUNDWATER WHILE SHOWERING

HOOKER/RUCO SITE - FUTURE-USE SCENARIO

RISKS TO RESIDENTS

* These parameters were used to calculate the contaminant intake in mg/day based on a model of volatile inhalation exposure while showering by Foster and Chrostowski, 1987.

NONCARCINOGENS - REASONABLE MAXIMUM GROUNDWATER INHALATION EXPOSURE WHILE SHOWERING: Adults

Scenario Parameters:

Shower Frequency = 1/day

Shower Room Vol.* (m^3) = 12.0

Droplet Diam.* (mm) = 1.0

Shower Water Flow Rate* (l/min) = 10.0

Bathroom Air Exchange Rate* (exch/hr) = 1.0

Inhalation Rate* (m^3/hr) = 1.4

Shower Water Temp* (C) = 45.0

Droplet Drop Time* (sec) = 2.000

Shower Duration* (min) = 15.0

Time in Room After Shower* (min) = 5.0

Viscosity of Shower Water* (cp) = 0.601

Chronic Daily Intake (mg/k Contaminant Intake X 1 / Body Wt. X Bioavail. Factor X Days Exposed / Days/Yr

Chronic Daily Intake (mg/k mg/day X 1 / 70 kg X 1.0 X 350 days / 365 days

Compound	Water Conc* (ug/L)	Henry Law Coeff* (atm-m^3/mol-K)	Mass Transfer Coeff* (cm/hr)	Contaminant Intake (mg/day)	Body Wt (kg)	Bioavail. Factor	Days Exposed Days/Yr	CDI	RfD (mg/kg-day)	CDI/RfD
Chlorobenzene	1.00E-01	3.45E-03	1.58E+01	4.09E-04	70	1.0	9.59E-01	5.60E-06	5.00E-03	1.12E-03
4-Methyl-2-pentanone	1.02E+01	9.40E-05	4.92E+00	1.24E-02	70	1.0	9.59E-01	1.70E-04	2.00E-02	8.49E-03
Carbon Disulfide	2.72E+00	1.40E-03	1.75E+01	1.01E-02	70	1.0	9.59E-01	1.39E-04	2.90E-03	4.79E-02
Ethylbenzene	2.90E-01	8.44E-03	1.70E+01	1.23E-03	70	1.0	9.59E-01	1.69E-05	2.90E-01	5.82E-05
Total Xylenes	9.70E-01	7.68E-03	1.69E+01	4.11E-03	70	1.0	9.59E-01	5.63E-05	8.60E-02	6.55E-04
2-Butanone	3.00E+00	8.54E-01	8.54E-01	5.40E-04	70	1.0	9.59E-01	7.40E-06	9.00E-02	8.22E-05
									Hazard Index =	5.83E-02

TABLE C-2

INHALATION OF VOLATILE CONTAMINANTS IN GROUNDWATER WHILE SHOWERING
HOOKER/RUCO SITE - FUTURE-USE SCENARIO
RISKS TO RESIDENTS

* These parameters were used to calculate the contaminant intake in mg/day based on a model of volatile inhalation exposure while showering by Foster and Chrostowski, 1987.

NONCARCINOGENS - REASONABLE MAXIMUM GROUNDWATER INHALATION EXPOSURE WHILE SHOWERING: Children

Scenario Parameters:

Shower Frequency = 1/day
Shower Room Vol.* (m^3) = 12.0
Droplet Diam.* (mm) = 1.0
Shower Water Flow Rate* (l/min) = 10.0
Bathroom Air Exchange Rate* (exch/hr) = 1.0
Inhalation Rate* (m^3/hr) = 1.5

Shower Water Temp* (C) = 45.0
Droplet Drop Time* (sec) = 2.000
Shower Duration* (min) = 15.0
Time in Room After Shower* (min) = 5.0
Viscosity of Shower Water* (cp) = 0.601

Chronic Daily Intake (mg/k Contaminant Intake X 1 / Body Wt. X Bioavail. Factor X Days Exposed / Days/Yr

Chronic Daily Intake (mg/k mg/day X 1 / 35 kg X 1.0 X 350 days / 365 days

Compound	Water Conc* (ug/L)	Henry Law Coeff* (atm-m^3/mol-K)	Mass Transfer Coeff* (cm/hr)	Contaminant Intake (mg/day)	Body Wt (kg)	Bioavail. Factor	Days Exposed Days/Yr	CDI	RfD (mg/kg-day)	CDI/RfD
Chlorobenzene	1.00E-01	3.45E-03	1.58E+01	4.38E-04	35	1.0	9.59E-01	1.20E-05	5.00E-03	2.40E-03
4-Methyl-2-pentanone	1.02E+01	9.40E-05	4.92E+00	1.33E-02	35	1.0	9.59E-01	3.64E-04	2.00E-02	1.82E-02
Carbon Disulfide	2.72E+00	1.40E-03	1.75E+01	1.09E-02	35	1.0	9.59E-01	2.97E-04	2.90E-03	1.03E-01
Ethylbenzene	2.90E-01	8.44E-03	1.70E+01	1.32E-03	35	1.0	9.59E-01	3.62E-05	2.90E-01	1.25E-04
Total Xylenes	9.70E-01	7.68E-03	1.69E+01	4.41E-03	35	1.0	9.59E-01	1.21E-04	8.60E-02	1.40E-03
2-Butanone	3.00E+00	1.05E-05	8.54E-01	5.72E-04	35	1.0	9.59E-01	1.57E-05	9.00E-02	1.74E-04
									Hazard Index =	1.25E-01

TABLE C-3

GROUND WATER DERMAL CONTACT PATHWAY
HOOKER/RUCO SITE-FUTURE USE SCENARIO
RISKS TO RESIDENTS-ADULTS

ORGANIC CARCINOGENS-REASONABLE MAXIMUM GROUND WATER DERMAL CONTACT EXPOSURE PATHWAY

Area exposed (cm2):	A =	20000	cm2
Event time (hr/event):	t_event =	0.25	hr/event
Event frequency (events/day):	EV =	1	event/day
Exposure frequency (days/year):	EF =	350	days/yr
Exposure duration (years):	ED =	30	years
Body weight (kg):	BW =	70	kg
Averaging time (days):	AT =	25550	days

CHEMICAL	CAS No.	MWT	logKow	Kp (cm/hr)	Conc (mg/cm3)	DA_event (mg/cm2-event)	DAD (mg/kg-day)	SF (mg/l-day)-1	RISK SF*DAD
Chloromethane	74873	50.5	0.91	4.2E-03	2.9E-07	7.0E-10	8.2E-08	1.3E-02	1.1E-09
Tetrachloroethene	127184	165.8	3.40	4.8E-02	9.8E-05	6.2E-06	7.3E-04	5.1E-02	3.7E-05
Trichloroethene	79016	131.4	2.42	1.6E-02	6.2E-06	1.0E-07	1.2E-05	1.1E-02	1.3E-07
Vinyl Chloride	75014	62.5	1.36	7.3E-03	6.9E-05	3.2E-07	3.8E-05	1.9E+00	7.1E-05
Benzene	71432	78.1	2.13	2.1E-02	7.0E-07	1.0E-08	1.2E-06	2.9E-02	3.5E-08
Bis(2-ethyl hexyl)phthalate	117817	390.6	5.11	3.4E-02	4.8E-06	1.0E-06	1.2E-04	1.4E-02	1.7E-06
Heptachlor Epoxide	1024573	399.3	2.65	5.3E-04	1.5E-08	5.4E-11	6.3E-09	9.1E+00	5.8E-08
								Total Risk =	1.1E-04

TABLE C-3

GROUND WATER DERMAL CONTACT PATHWAY
HOOKER/RUCO SITE-FUTURE USE SCENARIO
RISKS TO RESIDENTS-ADULTS

INORGANIC CARCINOGENS-REASONABLE MAXIMUM GROUND WATER DERMAL CONTACT PATHWAY

Area exposed (cm2):	A =	20000	cm2
Event time (hr/event):	t_event =	0.25	hr/event
Event frequency (events/day):	EV =	1	event/day
Exposure frequency (days/year):	EF =	350	days/yr
Exposure duration (years):	ED =	30	years
Body weight (kg):	BW =	70	kg
Averaging time (days):	AT =	25550	days

CHEMICAL	MWT	Kp (cm/hr)	Conc (mg/cm3)	DA_event (mg/cm2-event)	DAD (mg/kg-day)	SF (mg/kg-day)-1	RISK DAD*SF
Arsenic	7.49E+01	1.0E-03	2.7E-05	6.8E-09	7.9E-07	1.75E+00	1.39E-06
Beryllium	9.00E+00	1.0E-03	1.4E-06	3.5E-10	4.1E-08	4.30E+00	1.77E-07
						TOTAL RISK =	1.56E-06

TABLE C-3

GROUND WATER DERMAL PATHWAY
HOOKER/RUCO SITE-FUTURE USE SCENARIO
RISKS TO RESIDENTS-CHILDREN

ORGANIC CARCINOGENS REASONABLE MAXIMUM DERMAL CONTACT EXPOSURE PATHWAY

Area exposed (cm2):	A =	12000	cm2
Event time (hr/event):	t_event =	0.25	hr/event
Event frequency (events/day):	EV =	1	event/day
Exposure frequency (days/year):	EF =	350	days/yr
Exposure duration (years):	ED =	6	years
Body weight (kg):	BW =	70	kg
Averaging time (days):	AT =	25550	days

CHEMICAL	CAS No.	MWT	logKow	Kp (cm/hr)	Conc (mg/cm3)	DA_event (mg/cm2-event)	DAD (mg/kg-day)	SF (mg/l-day)-1	RISK SF*DAD
Chloromethane	74873	50.5	0.91	4.2E-03	2.9E-07	7.0E-10	9.9E-09	1.3E-02	1.3E-10
Tetrachloroethene	127184	165.8	3.40	4.8E-02	9.8E-05	6.2E-06	8.7E-05	5.1E-02	4.4E-06
Trichloroethene	79016	131.4	2.42	1.6E-02	6.2E-06	1.0E-07	1.4E-06	1.1E-02	1.6E-08
Vinyl Chloride	75014	62.5	1.36	7.3E-03	6.9E-05	3.2E-07	4.5E-06	1.9E+00	8.6E-06
Benzene	71432	78.1	2.13	2.1E-02	7.0E-07	1.0E-08	1.4E-07	2.9E-02	4.2E-09
Bis(2-ethyl hexyl)phthalate	117817	390.6	5.11	3.4E-02	4.8E-06	1.0E-06	1.4E-05	1.4E-02	2.0E-07
Heptachlor Epoxide	1024573	399.3	2.65	5.3E-04	1.5E-08	5.4E-11	7.6E-10	9.1E+00	6.9E-09
								Total Risk =	1.3E-05

TABLE C-3

GROUND WATER DERMAL CONTACT PATHWAY
HOOKER/RUCO SITE-FUTURE-USE SCENARIO
RISKS TO RESIDENTS - CHILDREN

INORGANIC CARCINOGENS-REASONABLE MAXIMUM GROUND WATER DERMAL CONTACT PATHWAY

Area exposed (cm2):	A =	12000	cm2
Event time (hr/event):	t_event =	0.25	hr/event
Event frequency (events/day):	EV =	1	event/day
Exposure frequency (days/year):	EF =	350	days/yr
Exposure duration (years):	ED =	6	years
Body weight (kg):	BW =	35	kg
Averaging time (days):	AT =	25550	days

CHEMICAL	MWT	Kp (cm/hr)	Conc (mg/cm3)	DA_event (mg/cm2-event)	DAD (mg/kg-day)	SF (mg/kg-day)-1	RISK DAD*SF
Arsenic	7.49E+01	1.0E-03	2.7E-05	6.8E-09	1.9E-07	1.75E+00	3.33E-07
Beryllium	9.00E+00	1.0E-03	1.4E-06	3.5E-10	9.9E-09	4.30E+00	4.24E-08
						TOTAL RISK =	3.75E-07

TABLE C-3
GROUND WATER DERMAL CONTACT PATHWAY
HOOKER/RUCO SITE-FUTURE USE SCENARIO
RISKS TO RESIDENTS-ADULTS

ORGANIC NONCARCINOGENS-REASONABLE MAXIMUM DERMAL CONTACT EXPOSURE PATHWAY

Area exposed (cm2):	A =	20000	cm2
Event time (hr/event):	t_event =	0.25	hr/event
Event frequency (events/day):	EV =	1	event/day
Exposure frequency (days/year):	EF =	350	days/yr
Exposure duration (years):	ED =	30	years
Body weight (kg):	BW =	70	kg
Averaging time (days):	AT =	10950	days

CHEMICAL	CAS No.	MWT	logKow	Kp (cm/hr)	Conc (mg/cm3)	DA_event (mg/cm2-event)	DAD (mg/kg-day)	RfD (mg/l-day)	RISK DAD/RfD
Chlorobenzene	108907	112.6	2.84	4.1E-02	1.0E-07	3.7E-09	1.0E-06	2.0E-02	5.0E-05
Tetrachloroethene	108907	165.8	3.40	4.8E-02	9.8E-05	6.2E-06	1.7E-03	1.0E-02	1.7E-01
Trans-1,2-Dichloroethene	540590	96.9	1.86	1.0E-02	5.4E-05	4.5E-07	1.2E-04	2.0E-02	6.1E-03
4-Methyl-2-Pentanone	108101	100.0	1.19	3.3E-03	1.0E-05	2.7E-08	7.4E-06	5.0E-02	1.5E-04
Acetone	67641	58.1	-0.24	5.7E-04	1.0E-05	3.5E-09	9.6E-07	1.0E-01	9.6E-06
Carbon Disulfide	75150	80.0	2.24	2.4E-02	2.7E-06	4.7E-08	1.3E-05	1.0E-01	1.3E-04
Ethylbenzene	100414	106.2	3.15	7.4E-02	2.9E-07	1.8E-08	5.1E-06	1.0E-01	5.1E-05
Total Xylenes	108383	106.2	3.20	8.0E-02	9.7E-07	6.7E-08	1.8E-05	2.0E+00	9.2E-06
Bis(2-ethylhexyl) Phthalate	117817	390.6	5.11	3.4E-02	4.8E-06	1.0E-06	2.8E-04	2.0E-02	1.4E-02
Heptachlor Epoxide	1024573	399.3	2.65	5.3E-04	1.5E-08	5.4E-11	1.5E-08	1.3E-05	1.1E-03
								Hazard Index =	1.9E-01

TABLE C-3

GROUND WATER DERMAL CONTACT PATHWAY
HOOKER/RUCO SITE-FUTURE - USE SCENARIO
RISKS TO RESIDENTS - ADULTS

INORGANIC NONCARCINOGENS-REASONABLE MAXIMUM GROUND WATER DERMAL CONTACT PATHWAY

Area exposed (cm2):	A =	20000	cm2
Event time (hr/event):	t_event =	0.25	hr/event
Event frequency (events/day):	EV =	1	event/day
Exposure frequency (days/year):	EF =	350	days/yr
Exposure duration (years):	ED =	30	years
Body weight (kg):	BW =	70	kg
Averaging time (days):	AT =	10950	days

CHEMICAL	MWT	Kp (cm/hr)	Conc (mg/cm3)	DA_event mg/cm2-event	DAD (mg/kg-day)	RfD (mg/l-day)	RISK DAD/RfD
Antimony	122.0	1.0E-03	2.00E-05	5.0E-09	1.4E-06	4.00E-04	3.4E-03
Arsenic	74.9	1.0E-03	2.70E-05	6.8E-09	1.8E-06	3.00E-04	6.2E-03
Barium	137.0	1.0E-03	7.50E-05	1.9E-08	5.1E-06	7.00E-02	7.3E-05
Beryllium	9.0	1.0E-03	1.40E-06	3.5E-10	9.6E-08	5.00E-03	1.9E-05
Cadmium	112.0	1.0E-03	3.60E-06	9.0E-10	2.5E-07	5.00E-04	4.9E-04
Chromium III	52.0	1.0E-03	9.90E-06	2.5E-09	6.8E-07	1.00E+00	6.8E-07
Chromium VI	52.0	1.0E-03	1.40E-06	3.5E-10	9.6E-08	5.00E-03	1.9E-05
Manganese	54.9	1.0E-03	1.50E-06	3.8E-10	1.0E-07	1.00E-01	1.0E-06
Nickel	58.7	1.0E-03	1.50E-05	3.8E-09	1.0E-06	2.00E-02	5.1E-05
Selenium	79.0	1.0E-03	2.40E-06	6.0E-10	1.6E-07	5.00E-03	3.3E-05
Silver	108.0	1.0E-03	1.40E-06	3.5E-10	9.6E-08	3.00E-03	3.2E-05
Vanadium	50.9	1.0E-03	4.30E-06	1.1E-09	2.9E-07	7.00E-03	4.2E-05
Zinc	65.4	1.0E-03	3.10E-05	7.8E-09	2.1E-06	2.00E-01	1.1E-05
						Hazard Index =	1.0E-02

TABLE C-3

GROUND WATER DERMAL CONTACT PATHWAY
HOOKER/RUCO SITE-FUTURE USE SCENARIO
RISKS TO RESIDENTS-CHILDREN

ORGANIC NONCARCINOGENS-REASONABLE MAXIMUM DERMAL CONTACT EXPOSURE PATHWAY

Area exposed (cm2):	A =	12000	cm2
Event time (hr/event):	t_event =	0.25	hr/event
Event frequency (events/day):	EV =	1	event/day
Exposure frequency (days/year):	EF =	350	days/yr
Exposure duration (years):	ED =	18	years
Body weight (kg):	BW =	70	kg
Averaging time (days):	AT =	6570	days

CHEMICAL	CAS No.	MWT	logKow	Kp (cm/hr)	Conc (mg/cm3)	DA_event (mg/cm2-event)	DAD (mg/kg-day)	RfD (mg/l-day)	RISK DAD/RfD
Chlorobenzene	108907	112.6	2.84	4.1E-02	1.0E-07	3.7E-09	6.0E-07	2.0E-02	3.0E-05
Tetrachloroethene	108907	165.8	3.40	4.8E-02	9.8E-05	6.2E-06	1.0E-03	1.0E-02	1.0E-01
Trans-1,2-Dichloroethene	540590	96.9	1.86	1.0E-02	5.4E-05	4.5E-07	7.3E-05	2.0E-02	3.7E-03
4-Methyl-2-Pentanone	108101	100.0	1.19	3.3E-03	1.0E-05	2.7E-08	4.4E-06	5.0E-02	8.9E-05
Acetone	67641	58.1	-0.24	5.7E-04	1.0E-05	3.5E-09	5.8E-07	1.0E-01	5.8E-06
Carbon Disulfide	75150	80.0	2.24	2.4E-02	2.7E-06	4.7E-08	7.7E-06	1.0E-01	7.7E-05
Ethylbenzene	100414	106.2	3.15	7.4E-02	2.9E-07	1.8E-08	3.0E-06	1.0E-01	3.0E-05
Total Xylenes	108383	106.2	3.20	8.0E-02	9.7E-07	6.7E-08	1.1E-05	2.0E+00	5.5E-06
Bis(2-ethylhexyl) Phthalate	117817	390.6	5.11	3.4E-02	4.8E-06	1.0E-06	1.7E-04	2.0E-02	8.4E-03
Heptachlor Epoxide	1024573	399.3	2.65	5.3E-04	1.5E-08	5.4E-11	8.9E-09	1.3E-05	6.8E-04
								Hazard Index =	1.1E-01

TABLE C-3

GROUND WATER DERMAL CONTACT PATHWAY
HOOKER/RUCO SITE-FUTURE - USE SCENARIO
RISKS TO RESIDENTS - CHILDREN

INORGANIC NONCARCINOGENS-REASONABLE MAXIMUM GROUND WATER DERMAL CONTACT PATHWAY

Area exposed (cm2):	A =	12000	cm2
Event time (hr/event):	t_event =	0.25	hr/event
Event frequency (events/day):	EV =	1	event/day
Exposure frequency (days/year):	EF =	350	days/yr
Exposure duration (years):	ED =	18	years
Body weight (kg):	BW =	35	kg
Averaging time (days):	AT =	6570	days

CHEMICAL	MWT	Kp (cm/hr)	Conc (mg/cm3)	DA_event mg/cm2-event	DAD (mg/kg-day)	RfD (mg/l-day)	RISK DAD/RfD
Antimony	122.0	1.0E-03	2.0E-05	5.0E-09	1.6E-06	4.00E-04	4.1E-03
Arsenic	74.9	1.0E-03	2.7E-05	6.8E-09	2.2E-06	3.00E-04	7.4E-03
Barium	137.0	1.0E-03	7.5E-05	1.9E-08	6.2E-06	7.00E-02	8.8E-05
Beryllium	9.0	1.0E-03	1.4E-06	3.5E-10	1.2E-07	5.00E-03	2.3E-05
Cadmium	112.0	1.0E-03	3.6E-06	9.0E-10	3.0E-07	5.00E-04	5.9E-04
Chromium III	52.0	1.0E-03	9.9E-06	2.5E-09	8.1E-07	1.00E+00	8.1E-07
Chromium VI	52.0	1.0E-03	1.4E-06	3.5E-10	1.2E-07	5.00E-03	2.3E-05
Manganese	54.9	1.0E-03	1.5E-06	3.8E-10	1.2E-07	1.00E-01	1.2E-06
Nickel	58.7	1.0E-03	1.5E-05	3.8E-09	1.2E-06	2.00E-02	6.2E-05
Selenium	79.0	1.0E-03	2.4E-06	6.0E-10	2.0E-07	5.00E-03	3.9E-05
Silver	108.0	1.0E-03	1.4E-06	3.5E-10	1.2E-07	3.00E-03	3.8E-05
Vanadium	50.9	1.0E-03	4.3E-06	1.1E-09	3.5E-07	7.00E-03	5.0E-05
Zinc	65.4	1.0E-03	3.1E-05	7.8E-09	2.5E-06	2.00E-01	1.3E-05
						Hazard Index =	1.2E-02

TABLE C-4

SURFACE WATER DERMAL CONTACT PATHWAY
HOOKER/RUCO SITE-PRESENT AND FUTURE USE SCENARIO
RISKS TO SITE WORKERS

ORGANIC CARCINOGENS -REASONABLE MAXIMUM SURFACE WATER DERMAL EXPOSURE PATHWAY

Area exposed (cm2):	A =	3120	cm2
Event time (hr/event):	t_event =	8.00	hr/event
Event frequency (events/day):	EV =	1	event/day
Exposure frequency (days/year):	EF =	24	days/yr
Exposure duration (years):	ED =	25	years
Body weight (kg):	BW =	70	kg
Averaging time (days):	AT =	25550	days

CHEMICAL	CAS No.	MWT	logKow	Kp (cm/hr)	Conc (mg/cm3)	DA_event (mg/cm2-event)	DAD (mg/kg-day)	SF (mg/l-day)-1	RISK SF*DAD
Bis(2-ethylhexyl) phthalate	117817	390.6	5.11	3.4E-02	3.1E-05	3.7E-05	3.9E-05	1.4E-02	5.5E-07
Total PCBs	1336363	328.0	6.04	3.7E-01	1.5E-06	1.3E-05	1.3E-05	7.7E+00	1.0E-04
								Total Risk =	1.0E-04

TABLE C-4

SURFACE WATER DERMAL CONTACT PATHWAY
HOOKER/RUCO SITE-PRESENT AND FUTURE-USE SCENARIO
RISKS TO SITE WORKER

INORGANIC CARCINOGENS-REASONABLE MAXIMUM SURFACE WATER DERMAL CONTACT PATHWAY

Area exposed (cm2):	A =	3120	cm2
Event time (hr/event):	t_event =	8.00	hr/event
Event frequency (events/day):	EV =	1	event/day
Exposure frequency (days/year):	EF =	24	days/yr
Exposure duration (years):	ED =	25	years
Body weight (kg):	BW =	70	kg
Averaging time (days):	AT =	25550	days

CHEMICAL	MWT	Kp (cm/hr)	Conc (mg/cm3)	DA_event (mg/cm2-event)	DAD (mg/kg-day)	SF (mg/kg-day)-1	RISK DAD*SF
Arsenic	7.49E+01	1.0E-03	1.5E-05	1.2E-07	1.3E-07	1.75E+00	2.20E-07
Beryllium	9.00E+00	1.0E-03	9.6E-07	7.7E-09	8.0E-09	4.30E+00	3.46E-08
						TOTAL RISK =	2.54E-07

TABLE C-4

SURFACE WATER DERMAL CONTACT PATHWAY

HOOKER/RUCO SITE-PRESENT AND FUTURE USE SCENARIO

RISKS TO SITE WORKERS

ORGANIC NONCARCINOGENS-REASONABLE MAXIMUM SURFACE WATER DERMAL CONTACT EXPOSURE PATHWAY

Area exposed (cm2):	A =	3120	cm2
Event time (hr/event):	t_event =	8.00	hr/event
Event frequency (events/day):	EV =	1	event/day
Exposure frequency (days/year):	EF =	24	days/yr
Exposure duration (years):	ED =	25	years
Body weight (kg):	BW =	70	kg
Averaging time (days):	AT =	9125	days

CHEMICAL	CAS No.	MWT	logKow	Kp (cm/hr)	Conc (mg/cm3)	DA_event (mg/cm2-event)	DAD (mg/kg-day)	RfD (mg/l-day)	DAD/RfD
Bis(2-ethylhexyl) phthalate	117817	390.6	5.11	3.4E-02	3.1E-05	3.7E-05	1.1E-04	2.0E-02	5.5E-03
								Hazard Index =	5.5E-03

TABLE C-4

SURFACE WATER DERMAL CONTACT PATHWAY
HOOKER/RUCO SITE-PRESENT AND FUTURE - USE SCENARIO
RISKS TO SITE WORKERS

INORGANIC NONCARCINOGENS-REASONABLE MAXIMUM SURFACE WATER DERMAL CONTACT PATHWAY

Area exposed (cm2):	A =	3120	cm2
Event time (hr/event):	t_event =	8.00	hr/event
Event frequency (events/day):	EV =	1	event/day
Exposure frequency (days/year):	EF =	24	days/yr
Exposure duration (years):	ED =	25	years
Body weight (kg):	BW =	70	kg
Averaging time (days):	AT =	9125	days

CHEMICAL	MWT	Kp (cm/hr)	Conc (mg/cm3)	DA_event mg/cm2-event	DAD (mg/kg-day)	RfD (mg/l-day)	DAD/RfD
Arsenic	74.9	1.0E-03	1.5E-05	1.2E-07	3.5E-07	3.00E-04	1.17E-03
Barium	137.0	1.0E-03	1.4E-04	1.1E-06	3.3E-06	7.00E-02	4.69E-05
Beryllium	9.0	1.0E-03	9.6E-07	7.7E-09	2.3E-08	5.00E-03	4.50E-06
Cadmium	112.0	1.0E-03	7.0E-06	5.6E-08	1.6E-07	5.00E-04	3.28E-04
Chromium III	52.0	1.0E-03	3.0E-05	2.4E-07	7.0E-07	1.00E+00	7.03E-07
Chromium VI	52.0	1.0E-03	4.3E-06	3.4E-08	1.0E-07	5.00E-03	2.02E-05
Manganese	54.9	1.0E-03	2.0E-04	1.6E-06	4.7E-06	1.00E-01	4.69E-05
Mercury	201.0	1.0E-03	2.4E-07	1.9E-09	5.6E-09	3.00E-04	1.88E-05
Nickel	58.7	1.0E-03	2.5E-05	2.0E-07	5.9E-07	2.00E-02	2.93E-05
Silver	108.0	1.0E-03	2.0E-06	1.6E-08	4.7E-08	3.00E-03	1.56E-05
Vanadium	50.9	1.0E-03	3.3E-05	2.6E-07	7.7E-07	7.00E-03	1.11E-04
Zinc	65.4	1.0E-03	4.8E-05	3.8E-07	1.1E-06	2.00E-01	5.63E-06
						Hazard Index =	1.80E-03

TABLE C-5

SURFACE WATER DERMAL PATHWAY FOR ORGANIC CHEMICALS IN WATER
HOOKER/RUCO SITE-PRESENT AND FUTURE USE SCENARIO
RISKS TO CHILD TRESPASSERS

ORGANIC CARCINOGENS DERMAL EXPOSURE PATHWAY-REASONABLE MAXIMUM CASE

Area exposed (cm2):	A =	3000	cm2
Event time (hr/event):	t_event =	5.00	hr/event
Event frequency (events/day):	EV =	1	event/day
Exposure frequency (days/year):	EF =	55	days/yr
Exposure duration (years):	ED =	6	years
Body weight (kg):	BW =	35	kg
Averaging time (days):	AT =	25550	days

CHEMICAL	CAS No.	MWT	logKow	Kp (cm/hr)	Conc (mg/cm3)	DA_event (mg/cm2-event)	DAD (mg/kg-day)	SF (mg/l-day)-1	RISK SF*DAD
Bis(2-ethylhexyl) phthalate	117817	390.6	5.11	3.4E-02	3.1E-05	3.0E-05	3.3E-05	1.4E-02	4.6E-07
Total PCBs	1336363	328.0	6.04	3.7E-01	1.5E-06	1.0E-05	1.1E-05	7.7E+00	8.6E-05
								Total Risk =	8.7E-05

TABLE C-5

SURFACE WATER DERMAL CONTACT PATHWAY

HOOKER/RUCO SITE-PRESENT AND FUTURE-USE SCENARIO

RISKS TO CHILD TRESPASSER

INORGANIC CARCINOGENS-REASONABLE MAXIMUM SURFACE WATER DERMAL CONTACT PATHWAY

Area exposed (cm2):	A =	3000	cm2
Event time (hr/event):	t_event =	5.00	hr/event
Event frequency (events/day):	EV =	1	event/day
Exposure frequency (days/year):	EF =	55	days/yr
Exposure duration (years):	ED =	6	years
Body weight (kg):	BW =	35	kg
Averaging time (days):	AT =	25550	days

CHEMICAL	MWT	Kp (cm/hr)	Conc (mg/cm3)	DA_event (mg/cm2-event)	DAD (mg/kg-day)	SF (mg/kg-day)-1	RISK DAD*SF
Arsenic	7.49E+01	1.0E-03	1.5E-05	7.5E-08	8.3E-08	1.75E+00	1.45E-07
Beryllium	9.00E+00	1.0E-03	1.4E-04	7.0E-07	7.7E-07	4.30E+00	3.33E-06
						TOTAL RISK =	3.48E-06

TABLE C-5

SURFACE WATER DERMAL PATHWAY FOR ORGANIC CHEMICALS IN WATER
HOOKER/RUCO SITE-PRESENT AND FUTURE USE SCENARIO
RISKS TO CHILD TRESPASSERS

ORGANIC NONCARCINOGENS DERMAL EXPOSURE PATHWAY-REASONABLE MAXIMUM CASE

Area exposed (cm2):	A =	3000	cm2
Event time (hr/event):	t_event =	5.00	hr/event
Event frequency (events/day):	EV =	1	event/day
Exposure frequency (days/year):	EF =	55	days/yr
Exposure duration (years):	ED =	6	years
Body weight (kg):	BW =	35	kg
Averaging time (days):	AT =	2190	days

CHEMICAL	CAS No.	MWT	logKow	Kp (cm/hr)	Conc (mg/cm3)	DA_event (mg/cm2-event)	DAD (mg/kg-day)	RfD (mg/l-day)	DAD/RfD
Bis(2-ethylhexyl) phthalate	117817	390.6	5.11	3.4E-02	3.1E-05	3.0E-05	3.8E-04	2.0E-02	1.9E-02
							Hazard Index	=	1.9E-02

TABLE C-5
SURFACE WATER DERMAL CONTACT PATHWAY
HOOKER/RUCO SITE-PRESENT AND FUTURE-USE SCENARIO
RISKS TO CHILD TRESPASSER

INORGANIC NONCARCINOGENS-REASONABLE MAXIMUM SURFACE WATER DERMAL CONTACT PATHWAY

Area exposed (cm2):	A =	3000	cm2
Event time (hr/event):	t_event =	5.00	hr/event
Event frequency (events/day):	EV =	1	event/day
Exposure frequency (days/year):	EF =	55	days/yr
Exposure duration (years):	ED =	6	years
Body weight (kg):	BW =	35	kg
Averaging time (days):	AT =	2190	days

CHEMICAL	MWT	Kp (cm/hr)	Conc (mg/cm3)	DA_event (mg/cm2-event)	DAD (mg/kg-day)	RfD (mg/kg-day)	DAD/RfD
Arsenic	7.49E+01	1.0E-03	1.5E-05	7.5E-08	9.7E-07	1.00E-03	9.69E-04
Barium	1.37E+02	1.0E-03	1.4E-04	7.0E-07	9.0E-06	5.00E-02	1.81E-04
Beryllium	9.01E+00	1.0E-03	9.6E-07	4.8E-09	6.2E-08	5.00E-03	1.24E-05
Chromium III	5.20E+01	1.0E-03	3.0E-05	1.5E-07	1.9E-06	1.00E+01	1.94E-07
Chromium VI	5.20E+01	1.0E-03	4.3E-06	2.2E-08	2.8E-07	2.00E-02	1.39E-05
Manganese	5.49E+01	1.0E-03	2.0E-04	1.0E-06	1.3E-05	1.00E-01	1.29E-04
Mercury	2.01E+02	1.0E-03	2.4E-07	1.2E-09	1.5E-08	3.00E-04	5.17E-05
Nickel	5.87E+01	1.0E-03	2.5E-05	1.3E-07	1.6E-06	2.00E-02	8.07E-05
Silver	1.08E+02	1.0E-03	2.0E-06	1.0E-08	1.3E-07	3.00E-03	4.31E-05
Vanadium	5.09E+01	1.0E-03	3.3E-05	1.7E-07	2.1E-06	7.00E-03	3.04E-04
Zinc	6.54E+01	1.0E-03	4.8E-05	2.4E-07	3.1E-06	2.00E-01	1.55E-05
						Hazard Index =	1.80E-03

TABLE C - 6
SEDIMENT PATHWAY
HOOKER/RUCO SITE - PRESENT AND FUTURE-USE SCENARIO
RISKS TO SITE WORKERS

CARCINOGENS - REASONABLE MAXIMUM SEDIMENT INGESTION EXPOSURE

Chronic Daily Intake = (mg/kg-day) Sediment Conc X Sediment Intake X Bioavail. Factor X 1 / Body Wt. X Days Exposed/Year / Days/Year X Years Exposed / Years Lifetime X 1kg / 10^6 mg

Chronic Daily Intake = (mg/kg-day) mg/kg X 100 mg/day X 1.00 X 1 / 70 kg X 24 days / 365 days X 25 yrs / 70 yrs X 1kg / 10^6 mg

Compound	Soil Conc. (mg/kg)	Intake (mg/day)	Bioavailability Factor	Body Wt (kg)	Days Exposed/Yr Days/Yr	Years Exposed Years Lifetime	CDI	SF	RISK SF*CDI
Tetrachloroethene	6.00E-04	100	1.00	70	6.58E-02	3.57E-01	2.01E-11	5.10E-02	1.03E-12
Trichloroethene	1.25E-03	100	1.00	70	6.58E-02	3.57E-01	4.20E-11	1.10E-02	4.62E-13
Styrene	6.00E-04	100	1.00	70	6.58E-02	3.57E-01	2.01E-11	3.00E-02	6.04E-13
Total PCBS	1.00E+01	100	1.00	70	6.58E-02	3.57E-01	3.35E-07	7.70E+00	2.58E-06
Arsenic	3.31E+00	100	1.00	70	6.58E-02	3.57E-01	1.11E-07	1.75E+00	1.94E-07
								Total Risk =	2.78E-06

NONCARCINOGENS - REASONABLE MAXIMUM SEDIMENT INGESTION EXPOSURE

Chronic Daily Intake = (mg/kg-day) Sediment Conc X Sediment Intake X Bioavail. Factor X 1 / Body Wt. X Days Exposed/Year / Days/Year X 1kg / 10^6 mg

Chronic Daily Intake = (mg/kg-day) mg/kg X 100 mg/day X 1.00 X 1 / 70 kg X 24 days / 365 days X 1kg / 10^6 mg

Compound	Soil Conc. (mg/kg)	Intake (mg/day)	Bioavailability Factor	Body Wt (kg)	Days Exposed/Yr Days/Yr	CDI	RfD	CDI/RfD
Tetrachloroethene	6.00E-04	100	1.00	70	6.58E-02	5.64E-11	1.00E-02	5.64E-09
Trans-1,2-Dichloroethene	4.89E-02	100	1.00	70	6.58E-02	4.60E-09	2.00E-02	2.30E-07
Ethylbenzene	1.20E-01	100	1.00	70	6.58E-02	1.13E-08	1.00E-01	1.13E-07
Styrene	6.00E-04	100	1.00	70	6.58E-02	5.64E-11	2.00E-01	2.82E-10
Toluene	9.00E-03	100	1.00	70	6.58E-02	8.45E-10	2.00E-01	4.23E-09
Antimony	1.30E+01	100	1.00	70	6.58E-02	1.22E-06	4.00E-04	3.05E-03
Cadmium	9.00E+00	100	1.00	70	6.58E-02	8.45E-07	5.00E-04	1.69E-03
Thallium	3.58E-01	100	1.00	70	6.58E-02	3.36E-08	8.00E-05	4.20E-04
Vanadium	1.23E+01	100	1.00	70	6.58E-02	1.16E-06	7.00E-03	1.66E-04
Zinc	1.43E+02	100	1.00	70	6.58E-02	1.35E-05	2.00E-01	6.73E-05
Arsenic	3.31E+00	100	1.00	70	6.58E-02	3.11E-07	3.00E-04	1.04E-03
							Hazard Index =	6.43E-03

TABLE C-7
SEDIMENT PATHWAY
HOOKER/RUCO SITE - PRESENT AND FUTURE-USE SCENARIO
RISKS TO SITE WORKERS

CARCINOGENS - REASONABLE MAXIMUM SEDIMENT INHALATION EXPOSURE

Chronic Daily Intake = (mg/kg-day)	Sediment Conc	X	Sediment Conc	X	Length of Exp	X	Inhalation Rate	X	Bioavail. Factor	X	1 / Body Wt	X	Days Exposed/Year / Days/Year	X	Years Exposed / Years Lifetime	X 1 kg / 10^6 mg
Chronic Daily Intake = (mg/kg-day)	mg/kg	X	1.44E-03 mg/m^3	X	8 hrs/day	X	3.0 m^3/hr	X	1.0	X	1 / 70 kg	X	24 days / 365 days	X	25 yrs / 70 yrs	X 1 kg / 10^6 mg

Compound	Sediment Conc (mg/kg)	Sediment Conc (mg/m^3)	Length of Exp (hrs/day)	Inhalation Rate (m^3/hr)	Bio-availability Factor	Body Wt (kg)	Days Exposed/Yr Days/Yr	Years Exposed Years Lifetime	CDI	SF	RISK SF*CDI
Tetrachloroethene	6.00E-04	1.44E-03	8.0	3.0	1.0	70	6.58E-02	3.57E-01	6.96E-15	1.80E-03	1.25E-17
Trichloroethene	1.25E-03	1.44E-03	8.0	3.0	1.0	70	6.58E-02	3.57E-01	1.45E-14	1.70E-02	2.47E-16
Styrene	6.00E-04	1.44E-03	8.0	3.0	1.0	70	6.58E-02	3.57E-01	6.96E-15	2.00E-03	1.39E-17
Cadmium	9.00E+00	1.44E-03	8.0	3.0	1.0	70	6.58E-02	3.57E-01	1.04E-10	6.30E+00	6.57E-10
Arsenic	3.31E+00	1.44E-03	8.0	3.0	1.0	70	6.58E-02	3.57E-01	3.84E-11	1.50E+01	5.76E-10
										Total Risk =	1.23E-09

NONCARCINOGENS - REASONABLE MAXIMUM SEDIMENT INHALATION EXPOSURE

Chronic Daily Intake = (mg/kg-day)	Sediment Conc	X	Sediment Conc	X	Length of Exp	X	Inhalation Rate	X	Bioavail. Factor	X	1 / Body Wt	X	Days Exposed/Year / Days/Year	X	1 kg / 10^6 mg
Chronic Daily Intake = (mg/kg-day)	mg/kg	X	1.44E-03 mg/m^3	X	8 hrs/day	X	3.0 m^3/hr	X	1.0	X	1 / 70 kg	X	24 days / 365 days	X	1 kg / 10^6 mg

Compound	Sediment Conc (mg/kg)	Sediment Conc (mg/m^3)	Length of Exp (hrs/day)	Inhalation Rate (m^3/hr)	Bio-availability Factor	Body Wt (kg)	Days Exposed/Year Days/Yr	CDI	RfD	CDI/RfD
Ethylbenzene	1.20E-01	1.44E-03	8.0	3.0	1.0	70	6.58E-02	3.90E-12	2.90E-01	1.34E-11
Toluene	9.00E-03	1.44E-03	8.0	3.0	1.0	70	6.58E-02	2.92E-13	5.70E-01	5.13E-13
									Hazard Index =	1.39E-11

TABLE C-8
SEDIMENT PATHWAY
HOOKER/RUCO SITE - PRESENT AND FUTURE-USE SCENARIO
RISKS TO SITE WORKERS

CARCINOGENS - REASONABLE MAXIMUM SEDIMENT DERMAL CONTACT EXPOSURE

Chronic Daily Intake = (mg/kg-day)	Sediment Conc	X	Absorption Factor	X	Skin Surface Area	X	Adherence Factor	X	1 / Body Wt	X	Events/Year / Days/Year	X	Years Exposed / Years Lifetime	X	1 kg / 10^6 mg	
Chronic Daily Intake = (mg/kg-day)	mg/kg	X	%	X	3.12E+03 cm^2	X	1.0 mg/cm^2-event	X	1 / 70 kg	X	24 events/yr / 365 days/yr	X	25 yrs / 70 yrs	X	1 kg / 10^6 mg	

Compound	Sediment Conc (mg/kg)	Absorption Factor (%)	Skin Surface Area (cm^2)	Adherence Factor (mg/cm^2-event)	Body Wt (kg)	Events/Yr Days/Yr	Years Exposed Years Lifetime	CDI	SF	RISK SF*CDI
Total PCBs (1).	1.00E+01	3.0%	3.12E+03	1.00	70	6.58E-02	3.57E-01	3.14E-07	7.70E+00	2.42E-06
									Total Risk =	2.42E-06

NONCARCINOGENS - REASONABLE MAXIMUM SEDIMENT DERMAL CONTACT EXPOSURE

Chronic Daily Intake = (mg/kg-day)	Sediment Conc	X	Absorption Factor	X	Skin Surface Area	X	Adherence Factor	X	1 / Body Wt	X	Events/Year / Days/Year	X	1 kg / 10^6 mg			
Chronic Daily Intake = (mg/kg-day)	mg/kg	X	%	X	3.12E+03 cm^2	X	1.0 mg/cm^2-event	X	1 / 70 kg	X	24 events/yr / 365 days/yr	X	1 kg / 10^6 mg			

Compound	Sediment Conc (mg/kg)	Absorption Factor (%)	Skin Surface Area (cm^2)	Adherence Factor (mg/cm^2-event)	Body Wt (kg)	Events/Yr Days/Yr	CDI	RfD	CDI/RfD
Cadmium (1)	9.00E+00	0.5%	3.12E+03	1.0	7.00E+01	6.58E-02	1.32E-07	5.00E-04	2.64E-04
								Hazard Index =	2.64E-04

(1) Only cadmium, total PCBs and dioxin can be considered in determing risk from soil/sediment dermal exposure pathways.

TABLE C-9
SEDIMENT PATHWAY
HOOKER/RUCO SITE - PRESENT AND FUTURE-USE SCENARIO
RISKS TO CHILD TRESPASSERS

CARCINOGENS - REASONABLE MAXIMUM SEDIMENT INGESTION EXPOSURE

Chronic Daily Intake = (mg/kg-day) Sediment Conc X Sediment Intake X Bioavail. Factor X 1 / Body Wt. X Days Exposed/Year / Days/Year X Years Exposed / Years Lifetime X 1kg / 10^6 mg

Chronic Daily Intake = (mg/kg-day) mg/kg X 200 mg/day X 1.00 X 1 / 35 kg X 55 days / 365 days X 6 yrs / 70 yrs X 1kg / 10^6 mg

Compound	Sediment Conc. (mg/kg)	Intake (mg/day)	Bioavailability Factor	Body Wt (kg)	Days Exposed/Yr / Days/Yr	Years Exposed / Years Lifetime	CDI	SF	RISK SF*CDI
Tetrachloroethene	6.00E-04	200	1.00	35	1.51E-01	8.57E-02	4.43E-11	5.10E-02	2.26E-12
Trichloroethene	1.25E-03	200	1.00	35	1.51E-01	8.57E-02	9.23E-11	1.10E-02	1.02E-12
Styrene	6.00E-04	200	1.00	35	1.51E-01	8.57E-02	4.43E-11	3.00E-02	1.33E-12
Total PCBS	1.00E+01	200	1.00	35	1.51E-01	8.57E-02	7.38E-07	7.70E+00	5.68E-06
Arsenic	3.31E+00	200	1.00	35	1.51E-01	8.57E-02	2.44E-07	1.75E+00	4.28E-07
								Total Risk =	6.11E-06

NONCARCINOGENS - REASONABLE MAXIMUM SEDIMENT INGESTION EXPOSURE

Chronic Daily Intake = (mg/kg-day) Sediment Conc X Sediment Intake X Bioavail. Factor X 1 / Body Wt. X Days Exposed/Year / Days/Year X 1kg / 10^6 mg

Chronic Daily Intake = (mg/kg-day) mg/kg X 200 mg/day X 1.00 X 1 / 35 kg X 55 days / 365 days X 1kg / 10^6 mg

Compound	Sediment Conc. (mg/kg)	Intake (mg/day)	Bioavailability Factor	Body Wt (kg)	Days Exposed/Yr / Days/Yr	CDI	RfD	CDI/RfD
Tetrachloroethene	6.00E-04	200	1.00	35	1.51E-01	5.17E-10	1.00E-01	5.17E-09
Trans-1,2-Dichloroethene	4.89E-02	200	1.00	35	1.51E-01	4.21E-08	2.00E-01	2.11E-07
Ethylbenzene	1.20E-01	200	1.00	35	1.51E-01	1.03E-07	1.00E+00	1.03E-07
Styrene	6.00E-04	200	1.00	35	1.51E-01	5.17E-10	2.00E+00	2.58E-10
Toluene	9.00E-03	200	1.00	35	1.51E-01	7.75E-09	2.00E+00	3.87E-09
Antimony	1.30E+01	200	1.00	35	1.51E-01	1.12E-05	4.00E-04	2.80E-02
Thallium	3.58E-01	200	1.00	35	1.51E-01	3.08E-07	7.00E-04	4.40E-04
Vanadium	1.23E+01	200	1.00	35	1.51E-01	1.06E-05	7.00E-03	1.52E-03
Zinc	1.43E+02	200	1.00	35	1.51E-01	1.23E-04	2.00E-01	6.17E-04
Arsenic	3.31E+00	200	1.00	35	1.51E-01	2.85E-06	1.00E-03	2.85E-03
							Hazard Index =	3.34E-02

TABLE C-10
SEDIMENT PATHWAY
HOOKER/RUCO SITE - PRESENT AND FUTURE-USE SCENARIO
RISKS TO CHILD TRESPASSERS

CARCINOGENS - REASONABLE MAXIMUM SEDIMENT INHALATION EXPOSURE

Chronic Daily Intake = (mg/kg-day)	Sediment Conc	X	Sediment Conc	X	Length of Exp	X	Inhalation Rate	X	Bioavail. Factor	X	1 / Body Wt	X	Days Exposed/Year / Days/Year	X	Years Exposed / Years Lifetime	X 1 kg / 10^6 mg
Chronic Daily Intake = (mg/kg-day)	mg/kg	X	1.44E-03 mg/m^3	X	0.5 hrs/day	X	3.0 m^3/hr	X	1.0	X	1 / 35 kg	X	55 days / 365 days	X	6 yrs / 70 yrs	X 1 kg / 10^6 mg

Compound	Sediment Conc (mg/kg)	Sediment Conc (mg/m^3)	Length of Exp (hrs/day)	Inhalation Rate (m^3/hr)	Bio-availability Factor	Body Wt (kg)	Days Exposed/Yr Days/Yr	Years Exposed Years Lifetime	CDI	SF	RISK SF*CDI
Tetrachloroethene	6.00E-04	1.44E-03	0.5	3.0	1.0	35	1.51E-01	8.57E-02	4.78E-16	1.80E-03	8.61E-19
Trichloroethene	1.25E-03	1.44E-03	0.5	3.0	1.0	35	1.51E-01	8.57E-02	9.97E-16	1.70E-02	1.70E-17
Styrene	6.00E-04	1.44E-03	0.5	3.0	1.0	35	1.51E-01	8.57E-02	4.78E-16	2.00E-03	9.57E-19
Cadmium	9.00E+00	1.44E-03	0.5	3.0	1.0	35	1.51E-01	8.57E-02	7.17E-12	6.30E+00	4.52E-11
Arsenic	3.31E+00	1.44E-03	0.5	3.0	1.0	35	1.51E-01	8.57E-02	2.64E-12	1.50E+01	3.96E-11
										Total Risk =	8.48E-11

NONCARCINOGENS - REASONABLE MAXIMUM SEDIMENT INHALATION EXPOSURE

Chronic Daily Intake = (mg/kg-day)	Sediment Conc	X	Sediment Conc	X	Length of Exp	X	Inhalation Rate	X	Bioavail. Factor	X	1 / Body Wt	X	Days Exposed/Year / Days/Year	X	1 kg / 10^6 mg
Chronic Daily Intake = (mg/kg-day)	mg/kg	X	1.44E-03 mg/m^3	X	0.5 hrs/day	X	3.0 m^3/hr	X	1.0	X	1 / 35 kg	X	55 days / 365 days	X	1 kg / 10^6 mg

Compound	Sediment Conc (mg/kg)	Sediment Conc (mg/m^3)	Length of Exp (hrs/day)	Inhalation Rate (m^3/hr)	Bio-availability Factor	Body Wt (kg)	Days Exposed/Year Days/Yr	CDI	RfD	CDI/RfD
Ethylbenzene	1.20E-01	1.44E-03	0.5	3.0	1.0	35	1.51E-01	1.12E-12	2.90E-01	3.85E-12
Toluene	9.00E-03	1.44E-03	0.5	3.0	1.0	35	1.51E-01	8.37E-14	2.70E-01	3.10E-13
									Hazard Index =	4.16E-12

TABLE C-11
SEDIMENT PATHWAY
HOOKER/RUCO SITE - PRESENT AND FUTURE-USE SCENARIO
RISKS TO CHILD TRESPASSERS

CARCINOGENS - REASONABLE MAXIMUM SEDIMENT DERMAL CONTACT EXPOSURE

Chronic Daily Intake = (mg/kg-day)	Sediment Conc	X	Absorption Factor	X	Skin Surface Area	X	Adherence Factor	X	1 / Body Wt	X	Events/Year / Days/Year	X	Years Exposed / Years Lifetime	X	1 kg / 10^6 mg	
Chronic Daily Intake = (mg/kg-day)	mg/kg	X	%	X	3.00E+03 cm^2	X	1.0 mg/cm^2-event	X	1 / 35 kg	X	55 events/yr / 365 days/yr	X	6 yrs / 70 yrs	X	1 kg / 10^6 mg	

Compound	Sediment Conc (mg/kg)	Absorption Factor (%)	Skin Surface Area (cm^2)	Adherence Factor (mg/cm^2-event)	Body Wt (kg)	Events/Yr Days/Yr	Years Exposed Years Lifetime	CDI	SF	RISK SF*CDI
Total PCBs (1)	1.00E+01	3.0%	3.00E+03	1.00	35	1.51E-01	8.57E-02	3.32E-07	7.70E+00	2.56E-06
									Total Risk =	2.56E-06

(1) Only cadmium, total PCBs and dioxin can be considered in determing risk from soil/sediment dermal exposure pathways.

TABLE C-12
SURFACE SOIL PATHWAY
HOOKER/RUCO SITE - PRESENT AND FUTURE-USE SCENARIO
RISKS TO SITE WORKERS

CARCINOGENS - REASONABLE MAXIMUM SURFACE SOIL INGESTION EXPOSURE

Chronic Daily Intake = (mg/kg-day) Soil Conc X Soil Intake X Bioavail. Factor X 1 / Body Wt. X Days Exposed/Year / Days/Year X Years Exposed / Years Lifetime X 1kg / 10^6 mg

Chronic Daily Intake = (mg/kg-day) mg/kg X 100 mg/day X 1.00 X 1 / 75 kg X 250 days / 365 days X 25 yrs / 70 yrs X 1kg / 10^6 mg

Compound	Soil Conc. (mg/kg)	Intake (mg/day)	Bioavailability Factor	Body Wt (kg)	Days Exposed/Yr / Days/Yr	Years Exposed / Years Lifetime	CDI	SF	RISK SF*CDI
1,1-Dichloroethene	1.26E-03	100	1.00	75	6.85E-01	3.57E-01	4.12E-10	6.00E-01	2.47E-10
Carbon Tetrachloride	3.75E-03	100	1.00	75	6.85E-01	3.57E-01	1.22E-09	1.30E-01	1.59E-10
Chloroform	1.74E-03	100	1.00	75	6.85E-01	3.57E-01	5.68E-10	6.10E-03	3.47E-12
Tetrachloroethene	5.67E-02	100	1.00	75	6.85E-01	3.57E-01	1.85E-08	5.10E-02	9.44E-10
Trichloroethene	5.55E-03	100	1.00	75	6.85E-01	3.57E-01	1.81E-09	1.10E-02	1.99E-11
Benzene	1.00E-03	100	1.00	75	6.85E-01	3.57E-01	3.26E-10	2.90E-02	9.46E-12
Carcinogenic PAHs	5.48E+00	100	1.00	75	6.85E-01	3.57E-01	1.79E-06	1.15E+01	2.06E-05
Hexachlorobenzene	5.80E-01	100	1.00	75	6.85E-01	3.57E-01	1.89E-07	1.60E+00	3.03E-07
Bis(2-ethylhexyl)phthalate	3.40E+01	100	1.00	75	6.85E-01	3.57E-01	1.11E-05	1.40E-02	1.55E-07
4,4'-DDD	1.15E-01	100	1.00	75	6.85E-01	3.57E-01	3.74E-08	2.40E-01	8.97E-09
4,4'-DDT	1.26E-01	100	1.00	75	6.85E-01	3.57E-01	4.10E-08	3.40E-01	1.39E-08
Heptachlor epoxide	4.05E-02	100	1.00	75	6.85E-01	3.57E-01	1.32E-08	9.10E+00	1.20E-07
Total PCBs	1.12E+01	100	1.00	75	6.85E-01	3.57E-01	3.65E-06	7.70E+00	2.81E-05
Arsenic	1.57E-02	100	1.00	75	6.85E-01	3.57E-01	5.11E-09	1.75E+00	8.94E-09
								Total Risk =	4.93E-05

TABLE C-12
SURFACE SOIL PATHWAY
HOOKER/RUCO SITE - PRESENT AND FUTURE-USE SCENARIO
RISKS TO SITE WORKERS

NONCARCINOGENS - REASONABLE MAXIMUM SURFACE SOIL INGESTION EXPOSURE

Chronic Daily Intake = (mg/kg-day)	Soil Conc	X	Soil Intake	X	Bioavail. Factor	X	1 / Body Wt.	X	Days Exposed/Year / Days/Year	X	1kg / 10^6 mg
Chronic Daily Intake = (mg/kg-day)	mg/kg	X	100 mg/day	X	1.00	X	1 / 70 kg	X	250 days / 365 days	X	1kg / 10^6 mg

Compound	Soil Conc. (mg/kg)	Intake (mg/day)	Bioavailability Factor	Body Wt (kg)	Days Exposed/Yr Days/Yr	CDI	RfD	CDI/RfD
1,1,1-Trichloroethane	1.20E-03	100	1.00	70	6.85E-01	1.17E-09	9.00E-02	1.30E-08
Carbon Tetrachloride	3.75E-03	100	1.00	70	6.85E-01	3.67E-09	7.00E-04	5.24E-06
Chlorobenzene	5.00E-04	100	1.00	70	6.85E-01	4.89E-10	2.00E-02	2.45E-08
Chloroform	1.74E-03	100	1.00	70	6.85E-01	1.70E-09	1.00E-02	1.70E-07
Tetrachloroethene	5.67E-02	100	1.00	70	6.85E-01	5.55E-08	1.00E-02	5.55E-06
Trans-1,2-Dichloroethene	2.61E-03	100	1.00	70	6.85E-01	2.55E-09	2.00E-02	1.28E-07
Ethylbenzene	1.72E-03	100	1.00	70	6.85E-01	1.68E-09	1.00E-01	1.68E-08
Toluene	9.71E-01	100	1.00	70	6.85E-01	9.50E-07	2.00E-01	4.75E-06
Total Xylenes	3.61E-03	100	1.00	70	6.85E-01	3.53E-09	2.00E+00	1.77E-09
Anthracene	2.30E-01	100	1.00	70	6.85E-01	2.25E-07	3.00E-01	7.50E-07
Fluoranthrene	1.08E+00	100	1.00	70	6.85E-01	1.06E-06	4.00E-02	2.65E-05
Fluorene	3.20E-01	100	1.00	70	6.85E-01	3.13E-07	4.00E-02	7.83E-06
Pyrene	9.52E-01	100	1.00	70	6.85E-01	9.31E-07	3.00E-02	3.10E-05
Hexachlorobenzene	5.80E-01	100	1.00	70	6.85E-01	5.68E-07	8.00E-04	7.09E-04
Bis(2-ethylhexyl)phthalate	3.40E+01	100	1.00	70	6.85E-01	3.33E-05	2.00E-02	1.66E-03
4,4'-DDT	1.26E-01	100	1.00	70	6.85E-01	1.23E-07	5.00E-04	2.46E-04
Heptachlor epoxide	4.05E-02	100	1.00	70	6.85E-01	3.96E-08	1.30E-05	3.04E-03
Antimony	9.20E-03	100	1.00	70	6.85E-01	9.00E-09	4.00E-04	2.25E-05
Arsenic	1.57E-02	100	1.00	70	6.85E-01	1.53E-08	3.00E-04	5.11E-05
Cadmium	1.12E-03	100	1.00	70	6.85E-01	1.09E-09	5.00E-04	2.18E-06
Mercury	1.71E-04	100	1.00	70	6.85E-01	1.67E-10	3.00E-04	5.58E-07
Nickel	1.98E-02	100	1.00	70	6.85E-01	1.94E-08	2.00E-02	9.69E-07
Selenium	8.00E-04	100	1.00	70	6.85E-01	7.83E-10	5.00E-03	1.57E-07
Silver	4.48E-04	100	1.00	70	6.85E-01	4.38E-10	3.00E-03	1.46E-07
Vanadium	1.82E-02	100	1.00	70	6.85E-01	1.78E-08	7.00E-03	2.55E-06
Zinc	8.26E-02	100	1.00	70	6.85E-01	8.08E-08	2.00E-01	4.04E-07
							Hazard Index =	5.83E-03

TABLE C-13
SURFACE SOIL PATHWAY
HOOKER/RUCO SITE - PRESENT AND FUTURE-USE SCENARIO
RISKS TO SITE WORKERS

CARCINOGENS - REASONABLE MAXIMUM SURFACE SOIL INHALATION EXPOSURE

Chronic Daily Intake = (mg/kg-day)	Soil Conc	X	Susp Soil Conc	X	Length of Exp	X	Inhalation Rate	X	Bioavail. Factor	X	1 / Body Wt	X	Days Exposed/Year / Days/Year	X	Years Exposed / Years Lifetime	X 1 kg / 10^6 mg
Chronic Daily Intake = (mg/kg-day)	mg/kg	X	1.44E-03 mg/m^3	X	8 hrs/day	X	3.0 m^3/hr	X	1.0	X	1 / 70 kg	X	250 days / 365 days	X	25 yrs / 70 yrs	X 1 kg / 10^6 mg

Compound	Soil Conc (mg/kg)	Susp Soil Conc (mg/m^3)	Length of Exp (hrs/day)	Inhalation Rate (m^3/hr)	Bio-availability Factor	Body Wt (kg)	Days Exposed/Yr Days/Yr	Years Exposed Years Lifetime	CDI	SF	RISK SF*CDI
1,1-Dichloroethene	1.26E-03	1.44E-03	8.0	3.0	1.0	70	6.85E-01	3.57E-01	1.52E-13	1.20E+00	1.83E-13
Carbon Tetrachloride	3.75E-03	1.44E-03	8.0	3.0	1.0	70	6.85E-01	3.57E-01	4.53E-13	5.30E-02	2.40E-14
Chloroform	1.74E-03	1.44E-03	8.0	3.0	1.0	70	6.85E-01	3.57E-01	2.10E-13	8.10E-02	1.70E-14
Tetrachloroethene	5.67E-02	1.44E-03	8.0	3.0	1.0	70	6.85E-01	3.57E-01	6.85E-12	1.80E-03	1.23E-14
Trichloroethene	5.55E-03	1.44E-03	8.0	3.0	1.0	70	6.85E-01	3.57E-01	6.70E-13	1.70E-02	1.14E-14
Benzene	1.00E-03	1.44E-03	8.0	3.0	1.0	70	6.85E-01	3.57E-01	1.21E-13	2.90E-02	3.50E-15
Carcinogenic PAHs	5.48E+00	1.44E-03	8.0	3.0	1.0	70	6.85E-01	3.57E-01	6.62E-10	6.10E+00	4.04E-09
Hexachlorobenzene	5.80E-01	1.44E-03	8.0	3.0	1.0	70	6.85E-01	3.57E-01	7.00E-11	1.60E+00	1.12E-10
4,4'-DDT	1.26E-01	1.44E-03	8.0	3.0	1.0	70	6.85E-01	3.57E-01	1.52E-11	3.40E-01	5.16E-12
Heptachlor epoxide	4.05E-02	1.44E-03	8.0	3.0	1.0	70	6.85E-01	3.57E-01	4.89E-12	9.10E+00	4.45E-11
Arsenic	1.57E-02	1.44E-03	8.0	3.0	1.0	70	6.85E-01	3.57E-01	1.89E-12	1.50E+01	2.84E-11
Cadmium	1.12E-03	1.44E-03	8.0	3.0	1.0	70	6.85E-01	3.57E-01	1.35E-13	6.30E+00	8.52E-13
Nickel	1.98E-02	1.44E-03	8.0	3.0	1.0	70	6.85E-01	3.57E-01	2.39E-12	8.40E-01	2.01E-12
										Total Risk =	4.23E-09

TABLE C-13
SURFACE SOIL PATHWAY
HOOKER/RUCO SITE - PRESENT AND FUTURE-USE SCENARIO
RISKS TO SITE WORKERS

NONCARCINOGENS - REASONABLE MAXIMUM SURFACE SOIL INHALATION EXPOSURE

Chronic Daily Intake = (mg/kg-day) = Soil Conc X Susp Soil Conc X Length of Exp X Inhalation Rate X Bioavail. Factor X 1 / Body Wt X Days Exposed/Year / Days/Year X 1 kg / 10^6 mg

Chronic Daily Intake = (mg/kg-day) = mg/kg X 1.44E-03 mg/m^3 X 8 hrs/day X 3.0 m^3/hr X 1.0 X 1 / 70 kg X 250 days / 365 days X 1 kg / 10^6 mg

Compound	Soil Conc (mg/kg)	Susp Soil Conc (mg/m^3)	Length of Exp (hrs/day)	Inhalation Rate (m^3/hr)	Bio-availability Factor	Body Wt (kg)	Days Exposed/Year Days/Yr	CDI	RfD	CDI/RfD
1,1,1-Trichloroethane	1.20E-03	1.44E-03	8.0	3.0	1.0	70	6.85E-01	4.05E-13	3.00E-01	1.35E-12
Chlorobenzene	5.00E-04	1.44E-03	8.0	3.0	1.0	70	6.85E-01	1.69E-13	5.00E-03	3.38E-11
Ethylbenzene	1.72E-03	1.44E-03	8.0	3.0	1.0	70	6.85E-01	5.82E-13	2.90E-01	2.01E-12
Toluene	9.71E-01	1.44E-03	8.0	3.0	1.0	70	6.85E-01	3.28E-10	5.70E-01	5.76E-10
Total Xylenes	3.61E-03	1.44E-03	8.0	3.0	1.0	70	6.85E-01	1.22E-12	8.60E-02	1.42E-11
Mercury	1.71E-04	1.44E-03	8.0	3.0	1.0	70	6.85E-01	5.78E-14	8.60E-05	6.72E-10
									Hazard Index =	1.30E-09

TABLE C-14
SURFACE SOIL PATHWAY
HOOKER/RUCO SITE - PRESENT AND FUTURE-USE SCENARIO
RISKS TO SITE WORKERS

CARCINOGENS - REASONABLE MAXIMUM SURFACE SOIL DERMAL CONTACT EXPOSURE

Chronic Daily Intake = (mg/kg-day)	Soil Conc	X	Absorption Factor	X	Skin Surface Area	X	Adherence Factor	X	1 / Body Wt	X	Events/Year / Days/Year	X	Years Exposed / Years Lifetime	X	1 kg / 10^6 mg	
Chronic Daily Intake = (mg/kg-day)	mg/kg	X	%	X	5.00E+03 cm^2	X	1.0 mg/cm^2-event	X	1 / 70 kg	X	250 events/yr / 365 days/yr	X	25 yrs / 70 yrs	X	1 kg / 10^6 mg	

Compound	Soil Conc (mg/kg)	Absorption Factor (%)	Skin Surface Area (cm^2)	Adherence Factor (mg/cm^2-event)	Body Wt (kg)	Events/Yr Days/Yr	Years Exposed Years Lifetime	CDI	SF	RISK SF*CDI
Total PCBs (1)	1.12E+01	3.0%	5.00E+03	1.00	70	6.85E-01	3.57E-01	5.87E-06	7.70E+00	4.52E-05
									Total Risk =	4.52E-05

NONCARCINOGENS - REASONABLE MAXIMUM SURFACE SOIL DERMAL CONTACT EXPOSURE

Chronic Daily Intake = (mg/kg-day)	Soil Conc	X	Absorption Factor	X	Skin Surface Area	X	Adherence Factor	X	1 / Body Wt	X	Events/Year / Days/Year	X	1 kg / 10^6 mg
Chronic Daily Intake = (mg/kg-day)	mg/kg	X	%	X	5.00E+03 cm^2	X	1.0 mg/cm^2-event	X	1 / 70 kg	X	250 events/yr / 365 days/yr	X	1 kg / 10^6 mg

Compound	Soil Conc (mg/kg)	Absorption Factor (%)	Skin Surface Area (cm^2)	Adherence Factor (mg/cm^2-event)	Body Wt (kg)	Events/Yr Days/Yr	CDI	RfD	CDI/RfD
Cadmium (1)	1.12E-03	0.5%	5.00E+03	1.0	7.00E+01	6.85E-01	2.73E-10	5.00E-04	5.46E-07
								Hazard Index =	5.46E-07

(1) Only cadmium, total PCBs and dioxin can be considered in determing risk from soil/sediment dermal exposure pathways.

TABLE C-15
SURFACE SOIL PATHWAY
HOOKER/RUCO SITE - FUTURE-USE SCENARIO
RISKS TO CONSTRUCTION WORKERS

CARCINOGENS - REASONABLE MAXIMUM SURFACE SOIL INGESTION EXPOSURE

Chronic Daily Intake = (mg/kg-day) Soil Conc X Soil Intake X Bioavail. Factor X 1 / Body Wt. X Days Exposed/Year / Days/Year X Years Exposed / Years Lifetime X 1kg / 10^6 mg

Chronic Daily Intake = (mg/kg-day) mg/kg X 100 mg/day X 1.00 X 1 / 70 kg X 250 days / 365 days X 1 yrs / 70 yrs X 1kg / 10^6 mg

Compound	Soil Conc. (mg/kg)	Intake (mg/day)	Bioavailability Factor	Body Wt (kg)	Days Exposed/Yr / Days/Yr	Years Exposed / Years Lifetime	CDI	SF	RISK SF*CDI
1,1-Dichloroethene	1.26E-03	100	1.00	70	6.85E-01	1.43E-02	1.76E-11	6.00E-01	1.06E-11
Carbon Tetrachloride	3.75E-03	100	1.00	70	6.85E-01	1.43E-02	5.24E-11	1.30E-01	6.82E-12
Chloroform	1.74E-03	100	1.00	70	6.85E-01	1.43E-02	2.44E-11	6.10E-03	1.49E-13
Tetrachloroethene	5.67E-02	100	1.00	70	6.85E-01	1.43E-02	7.93E-10	5.10E-02	4.04E-11
Trichloroethene	5.55E-03	100	1.00	70	6.85E-01	1.43E-02	7.76E-11	1.10E-02	8.53E-13
Benzene	1.00E-03	100	1.00	70	6.85E-01	1.43E-02	1.40E-11	2.90E-02	4.05E-13
Carcinogenic PAHs	5.48E+00	100	1.00	70	6.85E-01	1.43E-02	7.66E-08	1.15E+01	8.81E-07
Hexachlorobenzene	5.80E-01	100	1.00	70	6.85E-01	1.43E-02	8.11E-09	1.60E+00	1.30E-08
Bis(2-ethylhexyl)phthalate	3.40E+01	100	1.00	70	6.85E-01	1.43E-02	4.75E-07	1.40E-02	6.65E-09
4,4'-DDD	1.15E-01	100	1.00	70	6.85E-01	1.43E-02	1.60E-09	2.40E-01	3.84E-10
4,4'-DDT	1.26E-01	100	1.00	70	6.85E-01	1.43E-02	1.76E-09	3.40E-01	5.98E-10
Heptachlor epoxide	4.05E-02	100	1.00	70	6.85E-01	1.43E-02	5.65E-10	9.10E+00	5.15E-09
Total PCBs	1.12E+01	100	1.00	70	6.85E-01	1.43E-02	1.57E-07	7.70E+00	1.21E-06
Arsenic	1.57E-02	100	1.00	70	6.85E-01	1.43E-02	2.19E-10	1.75E+00	3.83E-10
								Total Risk =	2.11E-06

TABLE C-15
SURFACE SOIL PATHWAY
HOOKER/RUCO SITE - FUTURE-USE SCENARIO
RISKS TO CONSTRUCTION WORKERS

NONCARCINOGENS - REASONABLE MAXIMUM SURFACE SOIL INGESTION EXPOSURE

Chronic Daily Intake = (mg/kg-day)	Soil Conc	X	Soil Intake	X	Bioavail. Factor	X	1 / Body Wt.	X	Days Exposed/Year / Days/Year	X	1kg / 10^6 mg
Chronic Daily Intake = (mg/kg-day)	mg/kg	X	100 mg/day	X	1.00	X	1 / 70 kg	X	250 days / 365 days	X	1kg / 10^6 mg

Compound	Soil Conc. (mg/kg)	Intake (mg/day)	Bioavailability Factor	Body Wt (kg)	Days Exposed/Yr Days/Yr	CDI	RfD	CDI/RfD
1,1,1-Trichloroethane	1.20E-03	100	1.00	70	6.85E-01	1.17E-09	9.00E-01	1.30E-09
Carbon Tetrachloride	3.75E-03	100	1.00	70	6.85E-01	3.67E-09	7.00E-03	5.24E-07
Chlorobenzene	5.00E-04	100	1.00	70	6.85E-01	4.89E-10	2.00E-01	2.45E-09
Chloroform	1.74E-03	100	1.00	70	6.85E-01	1.70E-09	1.00E+00	1.70E-09
Tetrachloroethene	5.67E-02	100	1.00	70	6.85E-01	5.55E-08	1.00E-01	5.55E-07
Trans-1,2-Dichloroethene	2.61E-03	100	1.00	70	6.85E-01	2.55E-09	2.00E-01	1.28E-08
Ethylbenzene	1.72E-03	100	1.00	70	6.85E-01	1.68E-09	1.00E+00	1.68E-09
Toluene	9.71E-01	100	1.00	70	6.85E-01	9.50E-07	2.00E+00	4.75E-07
Total Xylenes	3.61E-03	100	1.00	70	6.85E-01	3.53E-09	4.00E+00	8.83E-10
Anthracene	2.30E-01	100	1.00	70	6.85E-01	2.25E-07	3.00E+00	7.50E-08
Fluoranthrene	1.08E+00	100	1.00	70	6.85E-01	1.06E-06	4.00E-01	2.65E-06
Fluorene	3.20E-01	100	1.00	70	6.85E-01	3.13E-07	4.00E-01	7.83E-07
Pyrene	9.52E-01	100	1.00	70	6.85E-01	9.31E-07	3.00E-01	3.10E-06
Hexachlorobenzene	5.80E-01	100	1.00	70	6.85E-01	5.68E-07	8.00E-04	7.09E-04
Bis(2-ethylhexyl)phthalate	3.40E+01	100	1.00	70	6.85E-01	3.33E-05	2.00E-02	1.66E-03
Di-n-octyl phthalate	7.72E-01	100	1.00	70	6.85E-01	7.55E-07	2.00E-02	3.77E-05
4,4'-DDT	1.26E-01	100	1.00	70	6.85E-01	1.23E-07	5.00E-04	2.46E-04
Antimony	9.20E-03	100	1.00	70	6.85E-01	9.00E-09	4.00E-04	2.25E-05
Arsenic	1.57E-02	100	1.00	70	6.85E-01	1.53E-08	1.00E-03	1.53E-05
Mercury	1.71E-04	100	1.00	70	6.85E-01	1.67E-10	3.00E-04	5.58E-07
Nickel	1.98E-02	100	1.00	70	6.85E-01	1.94E-08	2.00E-02	9.69E-07
Silver	4.48E-04	100	1.00	70	6.85E-01	4.38E-10	3.00E-03	1.46E-07
Vanadium	1.82E-02	100	1.00	70	6.85E-01	1.78E-08	7.00E-03	2.55E-06
Zinc	8.26E-02	100	1.00	70	6.85E-01	8.08E-08	2.00E-01	4.04E-07
							Hazard Index =	2.71E-03

TABLE C-16
SURFACE SOIL PATHWAY
HOOKER/RUCO SITE - FUTURE-USE SCENARIO
RISKS TO CONSTRUCTION WORKERS

CARCINOGENS - REASONABLE MAXIMUM SURFACE SOIL INHALATION EXPOSURE

Chronic Daily Intake = (mg/kg-day)	Soil Conc	X	Susp Soil Conc	X	Length of Exp	X	Inhalation Rate	X	Bioavail. Factor	X	1 / Body Wt	X	Days Exposed/Year / Days/Year	X	Years Exposed / Years Lifetime	X	1 kg / 10^6 mg	
Chronic Daily Intake = (mg/kg-day)	mg/kg	X	1.44E-03 mg/m^3	X	8 hrs/day	X	3.0 m^3/hr	X	1.0	X	1 / 70 kg	X	250 days / 365 days	X	1 yrs / 70 yrs	X	1 kg / 10^6 mg	

Compound	Soil Conc (mg/kg)	Susp Soil Conc (mg/m^3)	Length of Exp (hrs/day)	Inhalation Rate (m^3/hr)	Bio-availability Factor	Body Wt (kg)	Days Exposed/Yr Days/Yr	Years Exposed Years Lifetime	CDI	SF	RISK SF*CDI
1,1-Dichloroethene	1.26E-03	1.44E-03	8.0	3.0	1.0	70	6.85E-01	1.43E-02	6.10E-15	1.20E+00	7.32E-15
Carbon Tetrachloride	3.75E-03	1.44E-03	8.0	3.0	1.0	70	6.85E-01	1.43E-02	1.81E-14	5.30E-02	9.61E-16
Chloroform	1.74E-03	1.44E-03	8.0	3.0	1.0	70	6.85E-01	1.43E-02	8.42E-15	8.10E-02	6.82E-16
Tetrachloroethene	5.67E-02	1.44E-03	8.0	3.0	1.0	70	6.85E-01	1.43E-02	2.74E-13	1.80E-03	4.93E-16
Trichloroethene	5.55E-03	1.44E-03	8.0	3.0	1.0	70	6.85E-01	1.43E-02	2.68E-14	1.70E-02	4.56E-16
Benzene	1.00E-03	1.44E-03	8.0	3.0	1.0	70	6.85E-01	1.43E-02	4.83E-15	2.90E-02	1.40E-16
Carcinogenic PAHs	5.48E+00	1.44E-03	8.0	3.0	1.0	70	6.85E-01	1.43E-02	2.65E-11	6.10E+00	1.62E-10
Hexachlorobenzene	5.80E-01	1.44E-03	8.0	3.0	1.0	70	6.85E-01	1.43E-02	2.80E-12	1.60E+00	4.48E-12
4,4'-DDT	1.26E-01	1.44E-03	8.0	3.0	1.0	70	6.85E-01	1.43E-02	6.07E-13	3.40E-01	2.07E-13
Heptachlor epoxide	4.05E-02	1.44E-03	8.0	3.0	1.0	70	6.85E-01	1.43E-02	1.95E-13	9.10E+00	1.78E-12
Arsenic	1.57E-02	1.44E-03	8.0	3.0	1.0	70	6.85E-01	1.43E-02	7.57E-14	1.50E+01	1.14E-12
Cadmium	1.12E-03	1.44E-03	8.0	3.0	1.0	70	6.85E-01	1.43E-02	5.41E-15	6.30E+00	3.41E-14
Nickel	1.98E-02	1.44E-03	8.0	3.0	1.0	70	6.85E-01	1.43E-02	9.57E-14	8.40E-01	8.04E-14
										Total Risk =	1.69E-10

TABLE C-16
SURFACE SOIL PATHWAY
HOOKER/RUCO SITE - FUTURE-USE SCENARIO
RISKS TO CONSTRUCTION WORKERS

NONCARCINOGENS - REASONABLE MAXIMUM SURFACE SOIL INHALATION EXPOSURE

Chronic Daily Intake = (mg/kg-day)	Soil Conc	X	Susp Soil Conc	X	Length of Exp	X	Inhalation Rate	X	Bioavail. Factor	X	1 / Body Wt	X	Days Exposed/Year / Days/Year	X	1 kg / 10^6 mg
Chronic Daily Intake = (mg/kg-day)	mg/kg	X	1.44E-03 mg/m^3	X	8 hrs/day	X	3.0 m^3/hr	X	1.0	X	1 / 70 kg	X	250 days / 365 days	X	1 kg / 10^6 mg

Compound	Soil Conc (mg/kg)	Susp Soil Conc (mg/m^3)	Length of Exp (hrs/day)	Inhalation Rate (m^3/hr)	Bio-availability Factor	Body Wt (kg)	Days Exposed/Year Days/Yr	CDI	RfD	CDI/RfD
1,1,1-Trichloroethane	1.20E-03	1.44E-03	8.0	3.0	1.0	70	6.85E-01	4.05E-13	3.00E+00	1.35E-13
Chlorobenzene	5.00E-04	1.44E-03	8.0	3.0	1.0	70	6.85E-01	1.69E-13	5.00E-02	3.38E-12
Ethylbenzene	1.72E-03	1.44E-03	8.0	3.0	1.0	70	6.85E-01	5.82E-13	2.90E-01	2.01E-12
Toluene	9.71E-01	1.44E-03	8.0	3.0	1.0	70	6.85E-01	3.28E-10	2.70E-01	1.22E-09
Total Xylenes	3.61E-03	1.44E-03	8.0	3.0	1.0	70	6.85E-01	1.22E-12	8.60E-02	1.42E-11
Mercury	1.71E-04	1.44E-03	8.0	3.0	1.0	70	6.85E-01	5.78E-14	8.60E-05	6.72E-10
									Hazard Index =	1.91E-09

TABLE C-17
SURFACE SOIL PATHWAY
HOOKER/RUCO SITE - FUTURE-USE SCENARIO
RISKS TO CONSTRUCTION WORKERS

CARCINOGENS - REASONABLE MAXIMUM SURFACE SOIL DERMAL CONTACT EXPOSURE

Chronic Daily Intake = (mg/kg-day)	Soil Conc	X	Absorption Factor	X	Skin Surface Area	X	Adherence Factor	X	1 / Body Wt	X	Events/Year / Days/Year	X	Years Exposed / Years Lifetime	X	1 kg / 10^6 mg		
Chronic Daily Intake = (mg/kg-day)	mg/kg	X	%	X	5.00E+03 cm^2	X	1.0 mg/cm^2-event	X	1 / 70 kg	X	250 events/yr / 365 days/yr	X	1 yrs / 70 yrs	X	1 kg / 10^6 mg		
Compound	Soil Conc (mg/kg)		Absorption Factor (%)		Skin Surface Area (cm^2)		Adherence Factor (mg/cm^2-event)		Body Wt (kg)		Events/Yr Days/Yr		Years Exposed Years Lifetime		CDI	SF	RISK SF*CDI
Total PCBs (1)	1.12E+01		3.0%		5.00E+03		1.00		70		6.85E-01		1.43E-02		2.35E-07	7.70E+00	1.81E-06
																Total Risk =	1.81E-06

(1) Only cadmium, total PCBs and dioxin can be considered in determing risk from soil/sediment dermal exposure pathways.

TABLE C-18
SURFACE SOIL PATHWAY
HOOKER/RUCO SITE - PRESENT AND FUTURE-USE SCENARIO
RISKS TO CHILD TRESPASSERS

CARCINOGENS - REASONABLE MAXIMUM SURFACE SOIL INGESTION EXPOSURE

Chronic Daily Intake = (mg/kg-day)	Soil Conc	X	Soil Intake	X	Bioavail. Factor	X	1 / Body Wt.	X	Days Exposed/Year / Days/Year	X	Years Exposed / Years Lifetime	X	1kg / 10^6 mg	
Chronic Daily Intake = (mg/kg-day)	mg/kg	X	200 mg/day	X	1.00	X	1 / 35 kg	X	55 days / 365 days	X	6 yrs / 70 yrs	X	1kg / 10^6 mg	

Compound	Soil Conc. (mg/kg)	Intake (mg/day)	Bioavailability Factor	Body Wt (kg)	Days Exposed/Yr / Days/Yr	Years Exposed / Years Lifetime	CDI	SF	RISK SF*CDI
1,1-Dichloroethene	1.26E-03	200	1.00	35	1.51E-01	8.57E-02	9.31E-11	6.00E-01	5.59E-11
Carbon Tetrachloride	3.75E-03	200	1.00	35	1.51E-01	8.57E-02	2.77E-10	1.30E-01	3.60E-11
Chloroform	1.74E-03	200	1.00	35	1.51E-01	8.57E-02	1.29E-10	6.10E-03	7.84E-13
Tetrachloroethene	5.67E-02	200	1.00	35	1.51E-01	8.57E-02	4.19E-09	5.10E-02	2.14E-10
Trichloroethene	5.55E-03	200	1.00	35	1.51E-01	8.57E-02	4.09E-10	1.10E-02	4.50E-12
Benzene	1.00E-03	200	1.00	35	1.51E-01	8.57E-02	7.38E-11	2.90E-02	2.14E-12
Carcinogenic PAHs	5.48E+00	200	1.00	35	1.51E-01	8.57E-02	4.05E-07	1.15E+01	4.65E-06
Hexachlorobenzene	5.80E-01	200	1.00	35	1.51E-01	8.57E-02	4.28E-08	1.60E+00	6.85E-08
Bis(2-ethylhexyl)phthalate	3.40E+01	200	1.00	35	1.51E-01	8.57E-02	2.51E-06	1.40E-02	3.51E-08
4,4'-DDD	1.15E-01	200	1.00	35	1.51E-01	8.57E-02	8.46E-09	2.40E-01	2.03E-09
4,4'-DDT	1.26E-01	200	1.00	35	1.51E-01	8.57E-02	9.28E-09	3.40E-01	3.16E-09
Heptachlor epoxide	4.05E-02	200	1.00	35	1.51E-01	8.57E-02	2.99E-09	9.10E+00	2.72E-08
Total PCBs	1.12E+01	200	1.00	35	1.51E-01	8.57E-02	8.27E-07	7.70E+00	6.36E-06
Arsenic	1.57E-02	200	1.00	35	1.51E-01	8.57E-02	1.16E-09	1.75E+00	2.02E-09
								Total Risk =	1.12E-05

TABLE C-18
SURFACE SOIL PATHWAY
HOOKER/RUCO SITE - PRESENT AND FUTURE-USE SCENARIO
RISKS TO CHILD TRESPASSERS

NONCARCINOGENS - REASONABLE MAXIMUM SURFACE SOIL INGESTION EXPOSURE

Chronic Daily Intake = (mg/kg-day)	Soil Conc	X	Soil Intake	X	Bioavail. Factor	X	1 / Body Wt.	X	Days Exposed/Year / Days/Year	X	1kg / 10^6 mg
Chronic Daily Intake = (mg/kg-day)	mg/kg	X	200 mg/day	X	1.00	X	1 / 35 kg	X	55 days / 365 days	X	1kg / 10^6 mg

Compound	Soil Conc. (mg/kg)	Intake (mg/day)	Bioavailability Factor	Body Wt (kg)	Days Exposed/Yr Days/Yr	CDI	RfD	CDI/RfD
1,1,1-Trichloroethane	1.20E-03	200	1.00	35	1.51E-01	1.03E-09	9.00E-01	1.15E-09
Carbon Tetrachloride	3.75E-03	200	1.00	35	1.51E-01	3.23E-09	7.00E-03	4.62E-07
Chlorobenzene	5.00E-04	200	1.00	35	1.51E-01	4.31E-10	2.00E-01	2.15E-09
Chloroform	1.74E-03	200	1.00	35	1.51E-01	1.50E-09	1.00E+00	1.50E-09
Tetrachloroethene	5.67E-02	200	1.00	35	1.51E-01	4.89E-08	1.00E-01	4.89E-07
Trans-1,2-Dichloroethene	2.61E-03	200	1.00	35	1.51E-01	2.25E-09	2.00E-01	1.12E-08
Ethylbenzene	1.72E-03	200	1.00	35	1.51E-01	1.48E-09	1.00E+00	1.48E-09
Toluene	9.71E-01	200	1.00	35	1.51E-01	8.36E-07	2.00E+00	4.18E-07
Total Xylenes	3.61E-03	200	1.00	35	1.51E-01	3.11E-09	4.00E+00	7.77E-10
Anthracene	2.30E-01	200	1.00	35	1.51E-01	1.98E-07	3.00E+00	6.60E-08
Fluoranthrene	1.08E+00	200	1.00	35	1.51E-01	9.33E-07	4.00E-01	2.33E-06
Fluorene	3.20E-01	200	1.00	35	1.51E-01	2.76E-07	4.00E-01	6.89E-07
Pyrene	9.52E-01	200	1.00	35	1.51E-01	8.19E-07	3.00E-01	2.73E-06
Hexachlorobenzene	5.80E-01	200	1.00	35	1.51E-01	4.99E-07	8.00E-04	6.24E-04
Bis(2-ethylhexyl)phthalate	3.40E+01	200	1.00	35	1.51E-01	2.93E-05	2.00E-02	1.46E-03
Di-n-octyl phthalate	7.72E-01	200	1.00	35	1.51E-01	6.64E-07	2.00E-02	3.32E-05
4,4'-DDT	1.26E-01	200	1.00	35	1.51E-01	1.08E-07	5.00E-04	2.17E-04
Antimony	9.20E-03	200	1.00	35	1.51E-01	7.92E-09	4.00E-04	1.98E-05
Arsenic	1.57E-02	200	1.00	35	1.51E-01	1.35E-08	1.00E-03	1.35E-05
Mercury	1.71E-04	200	1.00	35	1.51E-01	1.47E-10	3.00E-04	4.91E-07
Nickel	1.98E-02	200	1.00	35	1.51E-01	1.71E-08	2.00E-02	8.53E-07
Silver	4.48E-04	200	1.00	35	1.51E-01	3.86E-10	3.00E-03	1.29E-07
Vanadium	1.82E-02	200	1.00	35	1.51E-01	1.57E-08	7.00E-03	2.24E-06
Zinc	8.26E-02	200	1.00	35	1.51E-01	7.11E-08	2.00E-01	3.56E-07
							Hazard Index =	2.38E-03

TABLE C-19
SURFACE SOIL PATHWAY
HOOKER/RUCO SITE - PRESENT AND FUTURE-USE SCENARIO
RISKS TO CHILD TRESPASSERS

CARCINOGENS - REASONABLE MAXIMUM SURFACE SOIL INHALATION EXPOSURE

Chronic Daily Intake = (mg/kg-day)	Soil Conc	X	Susp Soil Conc	X	Length of Exp	X	Inhalation Rate	X	Bioavail. Factor	X	1 / Body Wt	X	Days Exposed/Year / Days/Year	X	Years Exposed / Years Lifetime	X 1 kg / 10^6 mg
Chronic Daily Intake = (mg/kg-day)	mg/kg	X	1.44E-03 mg/m^3	X	5 hrs/day	X	3.0 m^3/hr	X	1.0	X	1 / 35 kg	X	55 days / 365 days	X	6 yrs / 70 yrs	X 1 kg / 10^6 mg

Compound	Soil Conc (mg/kg)	Susp Soil Conc (mg/m^3)	Length of Exp (hrs/day)	Inhalation Rate (m^3/hr)	Bio-availability Factor	Body Wt (kg)	Days Exposed/Yr Days/Yr	Years Exposed Years Lifetime	CDI	SF	RISK SF*CDI
1,1-Dichloroethene	1.26E-03	1.44E-03	5.0	3.0	1.0	35	1.51E-01	8.57E-02	1.01E-14	1.20E+00	1.21E-14
Carbon Tetrachloride	3.75E-03	1.44E-03	5.0	3.0	1.0	35	1.51E-01	8.57E-02	2.99E-14	5.30E-02	1.59E-15
Chloroform	1.74E-03	1.44E-03	5.0	3.0	1.0	35	1.51E-01	8.57E-02	1.39E-14	8.10E-02	1.12E-15
Tetrachloroethene	5.67E-02	1.44E-03	5.0	3.0	1.0	35	1.51E-01	8.57E-02	4.52E-13	1.80E-03	8.14E-16
Trichloroethene	5.55E-03	1.44E-03	5.0	3.0	1.0	35	1.51E-01	8.57E-02	4.42E-14	1.70E-02	7.52E-16
Benzene	1.00E-03	1.44E-03	5.0	3.0	1.0	35	1.51E-01	8.57E-02	7.97E-15	2.90E-02	2.31E-16
Carcinogenic PAHs	5.48E+00	1.44E-03	5.0	3.0	1.0	35	1.51E-01	8.57E-02	4.37E-11	6.10E+00	2.67E-10
Hexachlorobenzene	5.80E-01	1.44E-03	5.0	3.0	1.0	35	1.51E-01	8.57E-02	4.62E-12	1.60E+00	7.40E-12
4,4'-DDT	1.26E-01	1.44E-03	5.0	3.0	1.0	35	1.51E-01	8.57E-02	1.00E-12	3.40E-01	3.41E-13
Heptachlor epoxide	4.05E-02	1.44E-03	5.0	3.0	1.0	35	1.51E-01	8.57E-02	3.22E-13	9.10E+00	2.93E-12
Arsenic	1.57E-02	1.44E-03	5.0	3.0	1.0	35	1.51E-01	8.57E-02	1.25E-13	1.50E+01	1.87E-12
Cadmium	1.12E-03	1.44E-03	5.0	3.0	1.0	35	1.51E-01	8.57E-02	8.93E-15	6.30E+00	5.62E-14
Nickel	1.98E-02	1.44E-03	5.0	3.0	1.0	35	1.51E-01	8.57E-02	1.58E-13	8.40E-01	1.33E-13
										Total Risk =	2.79E-10

TABLE C-19
SURFACE SOIL PATHWAY
HOOKER/RUCO SITE - PRESENT AND FUTURE-USE SCENARIO
RISKS TO CHILD TRESPASSERS

NONCARCINOGENS - REASONABLE MAXIMUM SURFACE SOIL INHALATION EXPOSURE

Chronic Daily Intake = (mg/kg-day)	Soil Conc	X	Susp Soil Conc	X	Length of Exp	X	Inhalation Rate	X	Bioavail. Factor	X	1 / Body Wt	X	Days Exposed/Year / Days/Year	X	1 kg / 10^6 mg
Chronic Daily Intake = (mg/kg-day)	mg/kg	X	1.44E-03 mg/m^3	X	5 hrs/day	X	3.0 m^3/hr	X	1.0	X	1 / 35 kg	X	55 days / 365 days	X	1 kg / 10^6 mg

Compound	Soil Conc (mg/kg)	Susp Soil Conc (mg/m^3)	Length of Exp (hrs/day)	Inhalation Rate (m^3/hr)	Bio-availability Factor	Body Wt (kg)	Days Exposed/Year Days/Yr	CDI	RfD	CDI/RfD
1,1,1-Trichloroethane	1.20E-03	1.44E-03	5.0	3.0	1.0	35	1.51E-01	1.11E-13	3.00E+00	3.71E-14
Chlorobenzene	5.00E-04	1.44E-03	5.0	3.0	1.0	35	1.51E-01	4.65E-14	5.00E-02	9.30E-13
Ethylbenzene	1.72E-03	1.44E-03	5.0	3.0	1.0	35	1.51E-01	1.60E-13	2.90E-01	5.52E-13
Toluene	9.71E-01	1.44E-03	5.0	3.0	1.0	35	1.51E-01	9.03E-11	2.70E-01	3.34E-10
Total Xylenes	3.61E-03	1.44E-03	5.0	3.0	1.0	35	1.51E-01	3.36E-13	8.60E-02	3.90E-12
Mercury	1.71E-04	1.44E-03	5.0	3.0	1.0	35	1.51E-01	1.59E-14	8.60E-05	1.85E-10
									Hazard Index =	5.25E-10

TABLE C-20
SURFACE SOIL PATHWAY
HOOKER/RUCO SITE - PRESENT AND FUTURE-USE SCENARIO
RISKS TO CHILD TRESPASSERS

CARCINOGENS - REASONABLE MAXIMUM SURFACE SOIL DERMAL CONTACT EXPOSURE

Chronic Daily Intake = (mg/kg-day)	Soil Conc	X	Absorption Factor	X	Skin Surface Area	X	Adherence Factor	X	1 / Body Wt	X	Events/Year / Days/Year	X	Years Exposed / Years Lifetime	X	1 kg / 10^6 mg	
Chronic Daily Intake = (mg/kg-day)	mg/kg	X	%	X	3.00E+03 cm^2	X	1.0 mg/cm^2-event	X	1 / 35 kg	X	55 events/yr / 365 days/yr	X	6 yrs / 70 yrs	X	1 kg / 10^6 mg	

Compound	Soil Conc (mg/kg)	Absorption Factor (%)	Skin Surface Area (cm^2)	Adherence Factor (mg/cm^2-event)	Body Wt (kg)	Events/Yr Days/Yr	Years Exposed Years Lifetime	CDI	SF	RISK SF*CDI
Total PCBs (1)	5.48E+00	3.0%	3.00E+03	1.00	35	1.51E-01	8.57E-02	1.82E-07	7.70E+00	1.40E-06
									Total Risk =	1.40E-06

(1) Only cadmium, total PCBs and dioxin can be considered in determing risk from soil/sediment dermal exposure pathways.

TABLE C-21
SURFACE SOIL PATHWAY
HOOKER/RUCO SITE - PRESENT AND FUTURE-USE SCENARIO
RISKS TO RESIDENTS-ADULTS

CARCINOGENS - REASONABLE MAXIMUM SURFACE SOIL INHALATION EXPOSURE

Chronic Daily Intake = (mg/kg-day)	Soil Conc	X	Susp Soil Conc	X	Length of Exp	X	Inhalation Rate	X	Bioavail. Factor	X	1 / Body Wt	X	Days Exposed/Year / Days/Year	X	Years Exposed / Years Lifetime	X	1 kg / 10^6 mg
Chronic Daily Intake = (mg/kg-day)	mg/kg	X	1.44E-03 mg/m^3	X	24 hrs/day	X	0.9 m^3/hr	X	1.0	X	1 / 70 kg	X	350 days / 365 days	X	30 yrs / 70 yrs	X	1 kg / 10^6 mg

Compound	Soil Conc (mg/kg)	Susp Soil Conc (mg/m^3)	Length of Exp (hrs/day)	Inhalation Rate (m^3/hr)	Bio-availability Factor	Body Wt (kg)	Days Exposed/Yr / Days/Yr	Years Exposed / Years Lifetime	CDI	SF	RISK SF*CDI
1,1-Dichloroethene	1.26E-03	1.44E-03	24.0	0.9	1.0	70	9.59E-01	4.29E-01	2.30E-13	1.20E+00	2.77E-13
Carbon Tetrachloride	3.75E-03	1.44E-03	24.0	0.9	1.0	70	9.59E-01	4.29E-01	6.85E-13	5.30E-02	3.63E-14
Chloroform	1.74E-03	1.44E-03	24.0	0.9	1.0	70	9.59E-01	4.29E-01	3.18E-13	8.10E-02	2.58E-14
Tetrachloroethene	5.67E-02	1.44E-03	24.0	0.9	1.0	70	9.59E-01	4.29E-01	1.04E-11	1.80E-03	1.86E-14
Trichloroethene	5.55E-03	1.44E-03	24.0	0.9	1.0	70	9.59E-01	4.29E-01	1.01E-12	1.70E-02	1.72E-14
Benzene	1.00E-03	1.44E-03	24.0	0.9	1.0	70	9.59E-01	4.29E-01	1.83E-13	2.90E-02	5.30E-15
Carcinogenic PAHs	5.48E+00	1.44E-03	24.0	0.9	1.0	70	9.59E-01	4.29E-01	1.00E-09	6.10E+00	6.11E-09
Hexachlorobenzene	5.80E-01	1.44E-03	24.0	0.9	1.0	70	9.59E-01	4.29E-01	1.06E-10	1.60E+00	1.69E-10
4,4'-DDT	1.26E-01	1.44E-03	24.0	0.9	1.0	70	9.59E-01	4.29E-01	2.30E-11	3.40E-01	7.81E-12
Heptachlor epoxide	4.05E-02	1.44E-03	24.0	0.9	1.0	70	9.59E-01	4.29E-01	7.39E-12	9.10E+00	6.72E-11
Arsenic	1.57E-02	1.44E-03	24.0	0.9	1.0	70	9.59E-01	4.29E-01	2.86E-12	1.50E+01	4.29E-11
Cadmium	1.12E-03	1.44E-03	24.0	0.9	1.0	70	9.59E-01	4.29E-01	2.05E-13	6.30E+00	1.29E-12
Nickel	1.98E-02	1.44E-03	24.0	0.9	1.0	70	9.59E-01	4.29E-01	3.62E-12	8.40E-01	3.04E-12
										Total Risk =	6.40E-09

TABLE C-21
SURFACE SOIL PATHWAY
HOOKER/RUCO SITE - PRESENT AND FUTURE-USE SCENARIO
RISKS TO RESIDENTS-ADULTS

NONCARCINOGENS - REASONABLE MAXIMUM SURFACE SOIL INHALATION EXPOSURE

Chronic Daily Intake = (mg/kg-day)	Soil Conc	X	Susp Soil Conc	X	Length of Exp	X	Inhalation Rate	X	Bioavail. Factor	X	1 / Body Wt	X	Days Exposed/Year / Days/Year	X	1 kg / 10^6 mg
Chronic Daily Intake = (mg/kg-day)	mg/kg	X	1.44E-03 mg/m^3	X	24 hrs/day	X	0.9 m^3/hr	X	1.0	X	1 / 70 kg	X	350 days / 365 days	X	1 kg / 10^6 mg

Compound	Soil Conc (mg/kg)	Susp Soil Conc (mg/m^3)	Length of Exp (hrs/day)	Inhalation Rate (m^3/hr)	Bio-availability Factor	Body Wt (kg)	Days Exposed/Year Days/Yr	CDI	RfD	CDI/RfD
1,1,1-Trichloroethane	1.20E-03	1.44E-03	24.0	0.9	1.0	70	9.59E-01	5.10E-13	3.00E-01	1.70E-12
Chlorobenzene	5.00E-04	1.44E-03	24.0	0.9	1.0	70	9.59E-01	2.13E-13	5.00E-03	4.26E-11
Ethylbenzene	1.72E-03	1.44E-03	24.0	0.9	1.0	70	9.59E-01	7.33E-13	2.90E-01	2.53E-12
Toluene	9.71E-01	1.44E-03	24.0	0.9	1.0	70	9.59E-01	4.14E-10	5.70E-01	7.26E-10
Total Xylenes	3.61E-03	1.44E-03	24.0	0.9	1.0	70	9.59E-01	1.54E-12	8.60E-02	1.79E-11
Mercury	1.71E-04	1.44E-03	24.0	0.9	1.0	70	9.59E-01	7.29E-14	8.60E-05	8.47E-10
									Hazard Index =	1.64E-09

TABLE C-22
SURFACE SOIL PATHWAY
HOOKER/RUCO SITE - PRESENT AND FUTURE-USE SCENARIO
RISKS TO RESIDENTS-CHILDREN

CARCINOGENS - REASONABLE MAXIMUM SURFACE SOIL INHALATION EXPOSURE - Children

Chronic Daily Intake = (mg/kg-day)	Soil Conc	X	Susp Soil Conc	X	Length of Exp	X	Inhalation Rate	X	Bioavail. Factor	X	1 / Body Wt	X	Days Exposed/Year / Days/Year	X	Years Exposed / Years Lifetime	X	1 kg / 10^6 mg	
Chronic Daily Intake = (mg/kg-day)	mg/kg	X	1.44E-03 mg/m^3	X	24 hrs/day	X	0.9 m^3/hr	X	1.0	X	1 / 35 kg	X	350 days / 365 days	X	6 yrs / 70 yrs	X	1 kg / 10^6 mg	

Compound	Soil Conc (mg/kg)	Susp Soil Conc (mg/m^3)	Length of Exp (hrs/day)	Inhalation Rate (m^3/hr)	Bio-availability Factor	Body Wt (kg)	Days Exposed/Yr Days/Yr	Years Exposed Years Lifetime	CDI	SF	RISK SF*CDI
1,1-Dichloroethene	1.26E-03	1.44E-03	24.0	0.9	1.0	35	9.59E-01	8.57E-02	9.22E-14	1.20E+00	1.11E-13
Carbon Tetrachloride	3.75E-03	1.44E-03	24.0	0.9	1.0	35	9.59E-01	8.57E-02	2.74E-13	5.30E-02	1.45E-14
Chloroform	1.74E-03	1.44E-03	24.0	0.9	1.0	35	9.59E-01	8.57E-02	1.27E-13	8.10E-02	1.03E-14
Tetrachloroethene	5.67E-02	1.44E-03	24.0	0.9	1.0	35	9.59E-01	8.57E-02	4.14E-12	1.80E-03	7.46E-15
Trichloroethene	5.55E-03	1.44E-03	24.0	0.9	1.0	35	9.59E-01	8.57E-02	4.05E-13	1.70E-02	6.89E-15
Benzene	1.00E-03	1.44E-03	24.0	0.9	1.0	35	9.59E-01	8.57E-02	7.30E-14	2.90E-02	2.12E-15
Carcinogenic PAHs	5.48E+00	1.44E-03	24.0	0.9	1.0	35	9.59E-01	8.57E-02	4.00E-10	6.10E+00	2.44E-09
Hexachlorobenzene	5.80E-01	1.44E-03	24.0	0.9	1.0	35	9.59E-01	8.57E-02	4.24E-11	1.60E+00	6.78E-11
4,4'-DDT	1.26E-01	1.44E-03	24.0	0.9	1.0	35	9.59E-01	8.57E-02	9.19E-12	3.40E-01	3.12E-12
Heptachlor epoxide	4.05E-02	1.44E-03	24.0	0.9	1.0	35	9.59E-01	8.57E-02	2.95E-12	9.10E+00	2.69E-11
Arsenic	1.57E-02	1.44E-03	24.0	0.9	1.0	35	9.59E-01	8.57E-02	1.14E-12	1.50E+01	1.72E-11
Cadmium	1.12E-03	1.44E-03	24.0	0.9	1.0	35	9.59E-01	8.57E-02	8.18E-14	6.30E+00	5.15E-13
Nickel	1.98E-02	1.44E-03	24.0	0.9	1.0	35	9.59E-01	8.57E-02	1.45E-12	8.40E-01	1.22E-12
										Total Risk =	2.56E-09

TABLE C-22
SURFACE SOIL PATHWAY
HOOKER/RUCO SITE - PRESENT AND FUTURE-USE SCENARIO
RISKS TO RESIDENTS-CHILDREN

NONCARCINOGENS - REASONABLE MAXIMUM SURFACE SOIL INHALATION EXPOSURE - Children

Chronic Daily Intake = (mg/kg-day)	Soil Conc	X	Susp Soil Conc	X	Length of Exp	X	Inhalation Rate	X	Bioavail. Factor	X	1 / Body Wt	X	Days Exposed/Year / Days/Year	X	1 kg / 10^6 mg
Chronic Daily Intake = (mg/kg-day)	mg/kg	X	1.44E-03 mg/m^3	X	24 hrs/day	X	0.9 m^3/hr	X	1.0	X	1 / 35 kg	X	350 days / 365 days	X	1 kg / 10^6 mg

Compound	Soil Conc (mg/kg)	Susp Soil Conc (mg/m^3)	Length of Exp (hrs/day)	Inhalation Rate (m^3/hr)	Bio-availability Factor	Body Wt (kg)	Days Exposed/Year Days/Yr	CDI	RfD	CDI/RfD
1,1,1-Trichloroethane	1.20E-03	1.44E-03	24.0	0.9	1.0	35	9.59E-01	1.02E-12	3.00E-01	3.40E-12
Chlorobenzene	5.00E-04	1.44E-03	24.0	0.9	1.0	35	9.59E-01	4.26E-13	5.00E-03	8.52E-11
Ethylbenzene	1.72E-03	1.44E-03	24.0	0.9	1.0	35	9.59E-01	1.47E-12	2.90E-01	5.05E-12
Toluene	9.71E-01	1.44E-03	24.0	0.9	1.0	35	9.59E-01	8.27E-10	5.70E-01	1.45E-09
Total Xylenes	3.61E-03	1.44E-03	24.0	0.9	1.0	35	9.59E-01	3.08E-12	8.60E-02	3.58E-11
Mercury	1.71E-04	1.44E-03	24.0	0.9	1.0	35	9.59E-01	1.46E-13	8.60E-05	1.69E-09
									Hazard Index =	3.28E-09

TABLE C-23
SUBSURFACE SOIL PATHWAY
HOOKER/RUCO SITE - FUTURE-USE SCENARIO
RISKS TO CONSTRUCTION WORKERS

CARCINOGENS - REASONABLE MAXIMUM SUBSURFACE SOIL INGESTION EXPOSURE

Chronic Daily Intake = (mg/kg-day) = Soil Conc X Soil Intake X Bioavail. Factor X 1 / Body Wt. X Days Exposed/Year / Days/Year X Years Exposed / Years Lifetime X 1kg / 10^6 mg

Chronic Daily Intake = (mg/kg-day) = mg/kg X 100 mg/day X 1.00 X 1 / 70 kg X 250 days / 365 days X 1 yrs / 70 yrs X 1kg / 10^6 mg

Compound	Soil Conc. (mg/kg)	Intake (mg/day)	Bioavailability Factor	Body Wt (kg)	Days Exposed/Yr Days/Yr	Years Exposed Years Lifetime	CDI	SF	RISK SF*CDI
1,1,2,2-Tetrachloroethane	1.90E-03	100	1.00	70	6.85E-01	1.43E-02	2.65E-11	2.00E-01	5.30E-12
1,1-Dichloroethene	1.77E-03	100	1.00	70	6.85E-01	1.43E-02	2.48E-11	6.00E-01	1.49E-11
Bromodichloromethane	1.77E-03	100	1.00	70	6.85E-01	1.43E-02	2.48E-11	1.30E-01	3.22E-12
Carbon Tetrachloride	2.85E-03	100	1.00	70	6.85E-01	1.43E-02	3.98E-11	1.30E-01	5.18E-12
Chloroform	3.06E-03	100	1.00	70	6.85E-01	1.43E-02	4.28E-11	6.10E-03	2.61E-13
Tetrachloroethene	6.89E-02	100	1.00	70	6.85E-01	1.43E-02	9.63E-10	5.10E-02	4.91E-11
Trichloroethene	1.20E-02	100	1.00	70	6.85E-01	1.43E-02	1.68E-10	1.10E-02	1.85E-12
Benzene	1.00E-03	100	1.00	70	6.85E-01	1.43E-02	1.40E-11	2.90E-02	4.05E-13
Styrene	1.76E-03	100	1.00	70	6.85E-01	1.43E-02	2.46E-11	3.00E-02	7.38E-13
Carcinogenic PAHs	1.66E+00	100	1.00	70	6.85E-01	1.43E-02	2.32E-08	5.80E+00	1.35E-07
Bis(2-ethylhexyl)phthalate	8.80E+01	100	1.00	70	6.85E-01	1.43E-02	1.23E-06	1.40E-02	1.72E-08
n-Nitrosodiphenylamine	7.10E-02	100	1.00	70	6.85E-01	1.43E-02	9.92E-10	4.90E-03	4.86E-12
4,4'-DDD	3.90E-02	100	1.00	70	6.85E-01	1.43E-02	5.45E-10	2.40E-01	1.31E-10
4,4'-DDE	3.44E-02	100	1.00	70	6.85E-01	1.43E-02	4.80E-10	3.40E-01	1.63E-10
4,4'-DDT	3.74E-02	100	1.00	70	6.85E-01	1.43E-02	5.22E-10	3.40E-01	1.78E-10
Heptachlor Epoxide	1.20E-02	100	1.00	70	6.85E-01	1.43E-02	1.68E-10	9.10E+00	1.53E-09
Total PCBs	2.66E+01	100	1.00	70	6.85E-01	1.43E-02	3.72E-07	7.70E+00	2.86E-06
Alpha Chlordane	3.90E-02	100	1.00	70	6.85E-01	1.43E-02	5.45E-10	1.30E+00	7.09E-10
Beta-BHC	2.74E-02	100	1.00	70	6.85E-01	1.43E-02	3.84E-10	1.80E+00	6.91E-10
Arsenic	7.00E+00	100	1.00	70	6.85E-01	1.43E-02	9.78E-08	1.75E+00	1.71E-07
								Total Risk =	3.19E-06

TABLE C-23
SUBSURFACE SOIL PATHWAY
HOOKER/RUCO SITE - FUTURE-USE SCENARIO
RISKS TO CONSTRUCTION WORKERS

NONCARCINOGENS - REASONABLE MAXIMUM SUBSURFACE SOIL INGESTION EXPOSURE

Chronic Daily Intake = (mg/kg-day)	Soil Conc	X	Soil Intake	X	Bioavail. Factor	X	1 / Body Wt.	X	Days Exposed/Year / Days/Year	X	1kg / 10^6 mg
Chronic Daily Intake = (mg/kg-day)	mg/kg	X	100 mg/day	X	1.00	X	1 / 70 kg	X	250 days / 365 days	X	1kg / 10^6 mg

Compound	Soil Conc. (mg/kg)	Intake (mg/day)	Bioavailability Factor	Body Wt (kg)	Days Exposed/Yr / Days/Yr	CDI	RfD	CDI/RfD
1,1,1-Trichloroethane	1.74E-03	100	1.00	70	6.85E-01	1.70E-09	9.00E-01	1.89E-09
Carbon Tetrachloride	2.85E-03	100	1.00	70	6.85E-01	2.79E-09	7.00E-03	3.98E-07
Chloroform	3.06E-03	100	1.00	70	6.85E-01	3.00E-09	1.00E+00	3.00E-09
Tetrachloroethene	6.89E-02	100	1.00	70	6.85E-01	6.74E-08	1.00E-01	6.74E-07
Trans-1,2-Dichloroethene	4.50E-03	100	1.00	70	6.85E-01	4.40E-09	2.00E-01	2.20E-08
Toluene	5.93E-01	100	1.00	70	6.85E-01	5.81E-07	2.00E+00	2.90E-07
Total Xylenes	2.55E-03	100	1.00	70	6.85E-01	2.49E-09	4.00E+00	6.23E-10
Fluoranthrene	5.81E-01	100	1.00	70	6.85E-01	5.68E-07	4.00E-01	1.42E-06
Pyrene	5.68E-01	100	1.00	70	6.85E-01	5.56E-07	3.00E-01	1.85E-06
Benzoic Acid	2.78E+00	100	1.00	70	6.85E-01	2.72E-06	4.00E+00	6.80E-07
Bis(2-ethylhexyl)phthalate	8.80E+01	100	1.00	70	6.85E-01	8.61E-05	2.00E-02	4.31E-03
Di-n-octyl Phthalate	6.71E-01	100	1.00	70	6.85E-01	6.57E-07	1.00E+00	6.57E-07
4,4'-DDT	3.74E-02	100	1.00	70	6.85E-01	3.66E-08	5.00E-04	7.31E-05
Vanadium	1.14E+01	100	1.00	70	6.85E-01	1.11E-05	7.00E-03	1.59E-03
Di-n-butyl phthalate	9.41E-01	100	1.00	70	6.85E-01	9.20E-07	1.00E+00	9.20E-07
Alpha Chlordane	3.90E-02	100	1.00	70	6.85E-01	3.82E-08	6.00E-05	6.36E-04
Arsenic	7.00E+00	100	1.00	70	6.85E-01	6.85E-06	1.00E-03	6.85E-03
							Hazard Index =	1.35E-02

TABLE C-24
SUBSURFACE SOIL PATHWAY
HOOKER/RUCO SITE - FUTURE-USE SCENARIO
RISKS TO CONSTRUCTION WORKERS

CARCINOGENS - REASONABLE MAXIMUM SUBSURFACE SOIL INHALATION EXPOSURE

Chronic Daily Intake = (mg/kg-day)	Soil Conc	X	Susp Soil Conc	X	Length of Exp	X	Inhalation Rate	X	Bioavail. Factor	X	1 / Body Wt	X	Days Exposed/Year / Days/Year	X	Years Exposed / Years Lifetime	X	1 kg / 10^6 mg
Chronic Daily Intake = (mg/kg-day)	mg/kg	X	1.44E-03 mg/m^3	X	8 hrs/day	X	3.0 m^3/hr	X	1.0	X	1 / 70 kg	X	250 days / 365 days	X	1 yrs / 70 yrs	X	1 kg / 10^6 mg

Compound	Soil Conc (mg/kg)	Susp Soil Conc (mg/m^3)	Length of Exp (hrs/day)	Inhalation Rate (m^3/hr)	Bio-availability Factor	Body Wt (kg)	Days Exposed/Yr Days/Yr	Years Exposed Years Lifetime	CDI	SF	RISK SF*CDI
1,1,2,2-Tetrachloroethane	1.90E-03	1.44E-03	8.0	3.0	1.0	70	6.85E-01	1.43E-02	9.16E-15	2.00E-01	1.83E-15
1,1-Dichloroethene	1.77E-03	1.44E-03	8.0	3.0	1.0	70	6.85E-01	1.43E-02	8.57E-15	1.20E+00	1.03E-14
Carbon Tetrachloride	2.85E-03	1.44E-03	8.0	3.0	1.0	70	6.85E-01	1.43E-02	1.38E-14	1.30E-01	1.79E-15
Chloroform	3.06E-03	1.44E-03	8.0	3.0	1.0	70	6.85E-01	1.43E-02	1.48E-14	8.10E-02	1.20E-15
Tetrachloroethene	6.89E-02	1.44E-03	8.0	3.0	1.0	70	6.85E-01	1.43E-02	3.33E-13	1.80E-03	5.99E-16
Trichloroethene	1.20E-02	1.44E-03	8.0	3.0	1.0	70	6.85E-01	1.43E-02	5.80E-14	1.70E-02	9.85E-16
Benzene	1.00E-03	1.44E-03	8.0	3.0	1.0	70	6.85E-01	1.43E-02	4.83E-15	2.90E-02	1.40E-16
Styrene	1.76E-03	1.44E-03	8.0	3.0	1.0	70	6.85E-01	1.43E-02	8.51E-15	2.00E-03	1.70E-17
Carcinogenic PAHs	1.66E+00	1.44E-03	8.0	3.0	1.0	70	6.85E-01	1.43E-02	8.02E-12	6.10E+00	4.89E-11
4,4'-DDT	3.74E-02	1.44E-03	8.0	3.0	1.0	70	6.85E-01	1.43E-02	1.81E-13	3.40E-01	6.14E-14
Heptachlor Epoxide	1.20E-02	1.44E-03	8.0	3.0	1.0	70	6.85E-01	1.43E-02	5.80E-14	9.10E+00	5.28E-13
Alpha Chlordane	3.90E-02	1.44E-03	8.0	3.0	1.0	70	6.85E-01	1.43E-02	1.88E-13	1.30E+00	2.45E-13
Beta-BHC	2.74E-02	1.44E-03	8.0	3.0	1.0	70	6.85E-01	1.43E-02	1.33E-13	1.80E+00	2.39E-13
Arsenic	7.00E+00	1.44E-03	8.0	3.0	1.0	70	6.85E-01	1.43E-02	3.38E-11	1.50E+01	5.07E-10
										Total Risk =	5.57E-10

TABLE C-24
SUBSURFACE SOIL PATHWAY
HOOKER/RUCO SITE - FUTURE-USE SCENARIO
RISKS TO CONSTRUCTION WORKERS

NONCARCINOGENS - REASONABLE MAXIMUM SUBSURFACE SOIL INHALATION EXPOSURE

Chronic Daily Intake = (mg/kg-day)	Soil Conc	X	Susp Soil Conc	X	Length of Exp	X	Inhalation Rate	X	Bioavail. Factor	X	1 / Body Wt	X	Days Exposed/Year / Days/Year	X	1 kg / 10^6 mg
Chronic Daily Intake = (mg/kg-day)	mg/kg	X	1.44E-03 mg/m^3	X	8 hrs/day	X	3.0 m^3/hr	X	1.0	X	1 / 70 kg	X	250 days / 365 days	X	1 kg / 10^6 mg

Compound	Soil Conc (mg/kg)	Susp Soil Conc (mg/m^3)	Length of Exp (hrs/day)	Inhalation Rate (m^3/hr)	Bio-availability Factor	Body Wt (kg)	Days Exposed/Year Days/Yr	CDI	RfD	CDI/RfD
1,1,1-Trichloroethane	1.74E-03	1.44E-03	8.0	3.0	1.0	70	6.85E-01	5.88E-13	3.00E+00	1.96E-13
Toluene	5.93E-01	1.44E-03	8.0	3.0	1.0	70	6.85E-01	2.01E-10	2.70E-01	7.43E-10
Total Xylenes	2.55E-03	1.44E-03	8.0	3.0	1.0	70	6.85E-01	8.61E-13	8.60E-02	1.00E-11
									Hazard Index =	7.53E-10

TABLE C-25
SUBSURFACE SOIL PATHWAY
HOOKER/RUCO SITE - FUTURE-USE SCENARIO
RISKS TO CONSTRUCTION WORKERS

CARCINOGENS - REASONABLE MAXIMUM SUBSURFACE SOIL DERMAL CONTACT EXPOSURE

Chronic Daily Intake = (mg/kg-day)	Soil Conc	X	Absorption Factor	X	Skin Surface Area	X	Adherence Factor	X	1 / Body Wt	X	Events/Year / Days/Year	X	Years Exposed / Years Lifetime	X	1 kg / 10^6 mg	
Chronic Daily Intake = (mg/kg-day)	mg/kg	X	%	X	5.80E+03 cm^2	X	1.0 mg/cm^2-event	X	1 / 70 kg	X	250 events/yr / 365 days/yr	X	1 yrs / 70 yrs	X	1 kg / 10^6 mg	

Compound	Soil Conc (mg/kg)	Absorption Factor (%)	Skin Surface Area (cm^2)	Adherence Factor (mg/cm^2-event)	Body Wt (kg)	Events/Yr Days/Yr	Years Exposed Years Lifetime	CDI	SF	RISK SF*CDI
Total PCBs (1)	2.66E+01	3.0%	5.80E+03	1.00	70	6.85E-01	1.43E-02	6.47E-07	7.70E+00	4.98E-06
									Total Risk =	4.98E-06

(1) Only cadmium, total PCBs and dioxin can be considered in determing risk from soil/sediment dermal exposure pathways.

TABLE C-26
GROUNDWATER INGESTION PATHWAY - RESIDENTIAL USE
HOOKER/RUCO SITE - FUTURE-USE SCENARIO
RISKS TO RESIDENTS

CARCINOGENS - AVERAGE GROUNDWATER INGESTION EXPOSURE: Adults

Chronic Daily Intake (mg/kg-day) = Water Conc X Intake X Bioavail. Factor X 1 / Body Wt. X Years Exposed / Years Lifetime X Days Exposed/Year / Days/Year

Chronic Daily Intake (mg/kg-day) = mg/L X 1.4 l/day X 0.5 X 1 / 70 kg X 9 yrs / 70 yrs X 350 days / 365 days

Compound	Water Conc(mg/L)	Intake (l/day)	Bioavail. Factor	Body Wt (kg)	Years Exposed / Years Lifetime	Days Exposed/Year / Days/Year	CDI	SF (mg/kg-day)^-1	RISK CDI*SF
Tetrachloroethene	1.20E-02	1.4	0.5	70	1.29E-01	9.59E-01	1.48E-05	5.10E-02	7.53E-07
Vinyl Chloride	2.22E-02	1.4	0.5	70	1.29E-01	9.59E-01	2.73E-05	1.90E+00	5.20E-05
Arsenic	1.13E-02	1.4	0.5	70	1.29E-01	9.59E-01	1.39E-05	1.75E+00	2.44E-05
Beryllium	7.99E-04	1.4	0.5	70	1.29E-01	9.59E-01	9.85E-07	4.30E+00	4.24E-06
								TOTAL RISK=	8.14E-05

TABLE C-26
GROUNDWATER INGESTION PATHWAY - RESIDENTIAL USE
HOOKER/RUCO SITE - FUTURE-USE SCENARIO
RISKS TO RESIDENTS

CARCINOGENS - AVERAGE GROUNDWATER INGESTION EXPOSURE: Children - 6 years of exposure

Chronic Daily Intake (mg/kg-day) = Water Conc X Intake X Bioavail. Factor X 1 / Body Wt. X Years Exposed / Years Lifetime X Days Exposed/Year / Days/Year

Chronic Daily Intake (mg/kg-day) = mg/L X 1.4 l/day X 0.5 X 1 / 35 kg X 6 yrs / 70 yrs X 350 days / 365 days

Compound	Water Conc(mg/L)	Intake (l/day)	Bioavail. Factor	Body Wt (kg)	Years Exposed / Years Lifetime	Days Exposed/Year / Days/Year	CDI	SF (mg/kg-day)^-1	RISK CDI*SF
Tetrachloroethene	1.20E-02	1.4	0.5	35	8.57E-02	9.59E-01	1.97E-05	5.10E-02	1.00E-06
Vinyl Chloride	2.22E-02	1.4	0.5	35	8.57E-02	9.59E-01	3.65E-05	1.90E+00	6.93E-05
Arsenic	1.13E-02	1.4	0.5	35	8.57E-02	9.59E-01	1.86E-05	1.75E+00	3.25E-05
Beryllium	7.99E-04	1.4	0.5	35	8.57E-02	9.59E-01	1.31E-06	4.30E+00	5.65E-06
								Total Risk =	1.08E-04

TABLE C-26
GROUNDWATER INGESTION PATHWAY - RESIDENTIAL USE
HOOKER/RUCO SITE - FUTURE-USE SCENARIO
RISKS TO RESIDENTS

NONCARCINOGENS - AVERAGE GROUNDWATER INGESTION EXPOSURE: Adults

Chronic Daily Intake (mg/kg-day) = Water Conc X Intake X Bioavail. Factor X 1 / Body Wt. X Days Exposed/Year / Days/Year

Chronic Daily Intake (mg/kg-day) = mg/L X 1.4 l/day X 0.5 X 1 / 70 kg X 350 days / 365 days

Compound	Water Conc(mg/L)	Intake (l/day)	Bioavail. Factor	Body Wt (kg)	Days Exposed/Year / Days/Year	CDI	RfD (mg/kg-day)	CDI\RfD
Tetrachloroethene	1.20E-02	1.4	0.5	70	9.59E-01	1.15E-04	1.00E-02	1.15E-02
Antimony	1.73E-02	1.4	0.5	70	9.59E-01	1.66E-04	4.00E-04	4.14E-01
Arsenic	1.13E-02	1.4	0.5	70	9.59E-01	1.08E-04	3.00E-04	3.62E-01
Cadmium	5.13E-03	1.4	0.5	70	9.59E-01	4.92E-05	5.00E-04	9.84E-02
Manganese	2.76E-01	1.4	0.5	70	9.59E-01	2.65E-03	1.00E-01	2.65E-02
							Hazard Index =	9.12E-01

TABLE C-26
GROUNDWATER INGESTION PATHWAY - RESIDENTIAL USE
HOOKER/RUCO SITE - FUTURE-USE SCENARIO
RISKS TO RESIDENTS

NONCARCINOGENS - AVERAGE GROUNDWATER INGESTION EXPOSURE: Children

Chronic Daily Intake (mg/kg-day) = Water Conc X Intake X Bioavail. Factor X 1 / Body Wt. X Days Exposed/Year / Days/Year

Chronic Daily Intake (mg/kg-day) = mg/L X 1.4 l/day X 0.5 X 1 / 35 kg X 350 days / 365 days

Compound	Water Conc(mg/L)	Intake (l/day)	Bioavail. Factor	Body Wt (Kg)	Days Exposed/Year / Days/Year	CDI	RfD (mg/kg-day)	CDI/RfD
Tetrachloroethene	1.20E-02	1.4	0.5	35	9.59E-01	2.40E-04	1.00E-02	2.40E-02
Trans-1,2-Dichloroethene	4.86E-03	1.4	0.5	35	9.59E-01	9.73E-05	2.00E-02	4.86E-03
Antimony	1.73E-02	1.4	0.5	35	9.59E-01	3.46E-04	4.00E-04	8.64E-01
Arsenic	1.13E-02	1.4	0.5	35	9.59E-01	2.26E-04	3.00E-04	7.54E-01
Cadmium	5.13E-03	1.4	0.5	35	9.59E-01	1.03E-04	5.00E-04	2.05E-01
Manganese	2.76E-01	1.4	0.5	35	9.59E-01	5.52E-03	1.00E-01	5.52E-02
							Hazard Index =	1.91E+00

TABLE C-27
SURFACE WATER DERMAL CONTACT PATHWAY
HOOKER/RUCO SITE-PRESENT AND FUTURE - USE SCENARIO
RISKS TO SITE WORKERS

INORGANIC NONCARCINOGENS-AVERAGE SURFACE WATER DERMAL CONTACT PATHWAY

Area exposed (cm2):	A =	3120	cm2
Event time (hr/event):	t_event =	8.00	hr/event
Event frequency (events/day):	EV =	1	event/day
Exposure frequency (days/year):	EF =	12	days/yr
Exposure duration (years):	ED =	9	years
Body weight (kg):	BW =	70	kg
Averaging time (days):	AT =	3285	days

CHEMICAL	MWT	Kp (cm/hr)	Conc (mg/cm3)	DA_event mg/cm2-event	DAD (mg/kg-day)	RfD (mg/l-day)	DAD/RfD
Arsenic	74.9	1.0E-03	1.1E-05	8.5E-08	1.3E-07	3.00E-04	4.17E-04
Cadmium	112.0	1.0E-03	5.0E-06	4.0E-08	5.9E-08	5.00E-04	1.17E-04
Vanadium	50.9	1.0E-03	1.7E-05	1.4E-07	2.0E-07	7.00E-03	2.90E-05
						Hazard Index =	5.63E-04

TABLE C-27
SURFACE WATER DERMAL CONTACT PATHWAY
HOOKER/RUCO SITE-PRESENT AND FUTURE-USE SCENARIO
RISKS TO SITE WORKER

INORGANIC CARCINOGENS-AVERAGE SURFACE WATER DERMAL CONTACT PATHWAY

Area exposed (cm2):	A =	3120	cm2
Event time (hr/event):	t_event =	8.00	hr/event
Event frequency (events/day):	EV =	1	event/day
Exposure frequency (days/year):	EF =	12	days/yr
Exposure duration (years):	ED =	9	years
Body weight (kg):	BW =	70	kg
Averaging time (days):	AT =	3285	days

CHEMICAL	MWT	Kp (cm/hr)	Conc (mg/cm3)	DA_event (mg/cm2-event)	DAD (mg/kg-day)	SF (mg/kg-day)-1	RISK DAD*SF
Arsenic	7.49E+01	1.0E-03	1.1E-05	8.5E-08	1.3E-07	1.75E+00	2.19E-07
Beryllium	9.00E+00	1.0E-03	6.7E-07	5.4E-09	7.9E-09	4.30E+00	3.39E-08
						TOTAL RISK =	2.53E-07

TABLE C-28
SURFACE SOIL PATHWAY
HOOKER/RUCO SITE - PRESENT AND FUTURE-USE SCENARIO
RISKS TO SITE WORKERS

CARCINOGENS - AVERAGE SURFACE SOIL INGESTION EXPOSURE

Chronic Daily Intake = (mg/kg-day) = Soil Conc X Soil Intake X Bioavail. Factor X 1 / Body Wt. X Days Exposed/Year / Days/Year X Years Exposed / Years Lifetime X 1kg / 10^6 mg

Chronic Daily Intake = (mg/kg-day) = mg/kg X 100 mg/day X 0.50 X 1 / 75 kg X 250 days / 365 days X 9 yrs / 70 yrs X 1kg / 10^6 mg

Compound	Soil Conc. (mg/kg)	Intake (mg/day)	Bioavailability Factor	Body Wt (kg)	Days Exposed/Yr Days/Yr	Years Exposed Years Lifetime	CDI	SF	RISK SF*CDI
Carcinogenic PAHs	2.45E+00	100	0.50	75	6.85E-01	1.29E-01	1.44E-07	1.15E+01	1.65E-06
Total PCBs	5.04E+00	100	0.50	75	6.85E-01	1.29E-01	2.96E-07	7.70E+00	2.28E-06
								Total Risk =	3.93E-06

TABLE C-28
SURFACE SOIL PATHWAY
HOOKER/RUCO SITE - PRESENT AND FUTURE-USE SCENARIO
RISKS TO SITE WORKERS

NONCARCINOGENS - AVERAGE SURFACE SOIL INGESTION EXPOSURE

Chronic Daily Intake = (mg/kg-day) $\frac{\text{Soil Conc} \times \text{Soil Intake} \times \text{Bioavail. Factor} \times 1}{\text{Body Wt.}} \times \frac{\text{Days Exposed/Year}}{\text{Days/Year}} \times \frac{1\text{kg}}{10^6\text{ mg}}$

Chronic Daily Intake = (mg/kg-day) $\frac{\text{mg/kg} \times 100\text{ mg/day} \times 0.50 \times 1}{70\text{ kg}} \times \frac{250\text{ days}}{365\text{ days}} \times \frac{1\text{kg}}{10^6\text{ mg}}$

Compound	Soil Conc. (mg/kg)	Intake (mg/day)	Bioavailability Factor	Body Wt (kg)	Days Exposed/Yr Days/Yr	CDI	RfD	CDI/RfD
Hexachlorobenzene	1.01E+00	100	0.50	70	6.85E-01	4.96E-07	8.00E-04	6.20E-04
Bis(2-ethythexyl)phthalate	8.16E+00	100	0.50	70	6.85E-01	3.99E-06	2.00E-02	2.00E-04
4,4'-DDT	2.98E-01	100	0.50	70	6.85E-01	1.46E-07	5.00E-04	2.92E-04
Heptachlor epoxide	1.27E-01	100	0.50	70	6.85E-01	6.20E-08	1.30E-05	4.77E-03
							Hazard Index =	5.88E-03

TABLE C-27
SURFACE WATER DERMAL CONTACT PATHWAY
HOOKER/RUCO SITE-PRESENT AND FUTURE USE SCENARIO
RISKS TO SITE WORKERS

ORGANIC CARCINOGENS -AVERAGE SURFACE WATER DERMAL EXPOSURE PATHWAY

Area exposed (cm2):	A =	3120	cm2
Event time (hr/event):	t_event =	8.00	hr/event
Event frequency (events/day):	EV =	1	event/day
Exposure frequency (days/year):	EF =	12	days/yr
Exposure duration (years):	ED =	9	years
Body weight (kg):	BW =	70	kg
Averaging time (days):	AT =	3285	days

CHEMICAL	CAS No.	MWT	logKow	Kp (cm/hr)	Conc (mg/cm3)	DA_event (mg/cm2-event)	DAD (mg/kg-day)	SF (mg/l-day)-1	RISK SF*DAD
Total PCBs	1336363	328.0	6.04	3.7E-01	1.5E-06	1.3E-05	1.9E-05	7.7E+00	1.4E-04
								Total Risk =	1.4E-04

TABLE C-27
SURFACE WATER DERMAL CONTACT PATHWAY
HOOKER/RUCO SITE-PRESENT AND FUTURE USE SCENARIO
RISKS TO SITE WORKERS

AVERAGE ORGANIC NONCARCINOGENIC DERMAL EXPOSURE PATHWAY

Area exposed (cm2):	A =	3120	cm2
Event time (hr/event):	t_event =	8.00	hr/event
Event frequency (events/day):	EV =	1	event/day
Exposure frequency (days/year):	EF =	12	days/yr
Exposure duration (years):	ED =	9	years
Body weight (kg):	BW =	70	kg
Averaging time (days):	AT =	3285	days

CHEMICAL	CAS No.	MWT	logKow	Kp (cm/hr)	Conc (mg/cm3)	DA_event (mg/cm2-event)	DAD (mg/kg-day)	RfD (mg/l-day)	DAD/RfD
Bis(2-ethylhexyl) phthalate	117817	390.6	5.11	3.4E-02	1.7E-05	2.0E-05	3.0E-05	2.0E-02	1.5E-03
								Hazard Index =	1.5E-03

HKR 001 1746