37389

[redacted]

Fred C. Hart Associates Inc.

ASB 002 1007 F

REMEDIAL INVESTIGATION REPORT
MILLINGTON SITE
MORRIS COUNTY, NEW JERSEY

APPENDIX VOLUME: III

Prepared For:
National Gypsum Company
Dallas, Texas

Prepared By:

Fred C. Hart Associates, Inc.
140 Allen Road
Liberty Corner, N.J. 07938

FEBRUARY 29, 1988

ASB 002 1008

APPENDIX C

MONITORING WELL CONSTRUCTION DIAGRAMS

(0614n-20)

ASB 002 1009

HART WELLS

MW-901

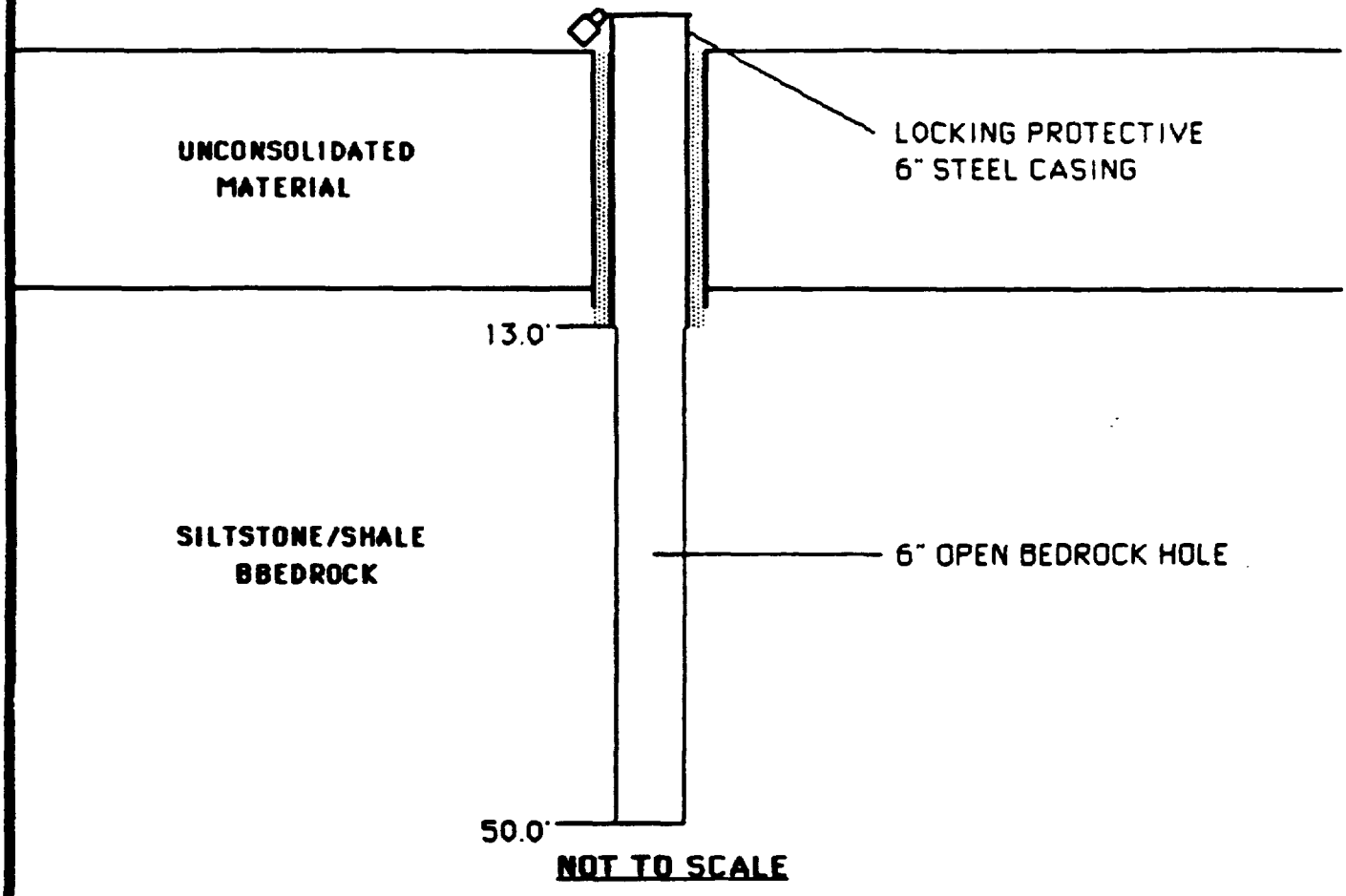

NOT TO SCALE

LEGEND

CEMENT GROUT OR BENTONITE SLURRY

MONITOR WELL CONSTRUCTION DIAGRAM MILLINGTON SITE MILLINGTON N.J.

ASB 002 1010

Prepared by: Fred C. Hart Associates, Inc.

HART WELLS

MW-902

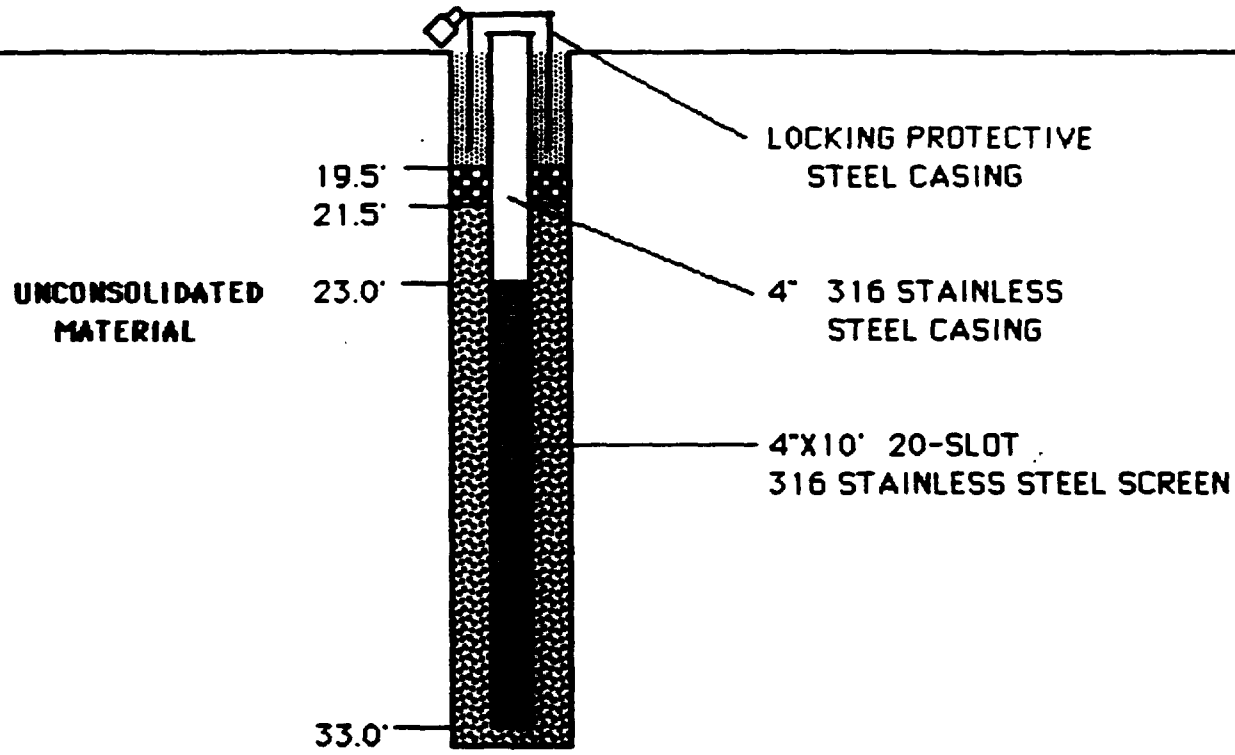

NOT TO SCALE

LEGEND

- CEMENT GROUT OR BENTONITE SLURRY
- BENTONITE PELLETS
- GRAVEL PACK

MONITOR WELL CONSTRUCTION DIAGRAM
MILLINGTON SITE
MILLINGTON N.J.

Prepared by: Fred C. Hart Associates, Inc.

ASB 002 1011

HART WELLS

MW-903

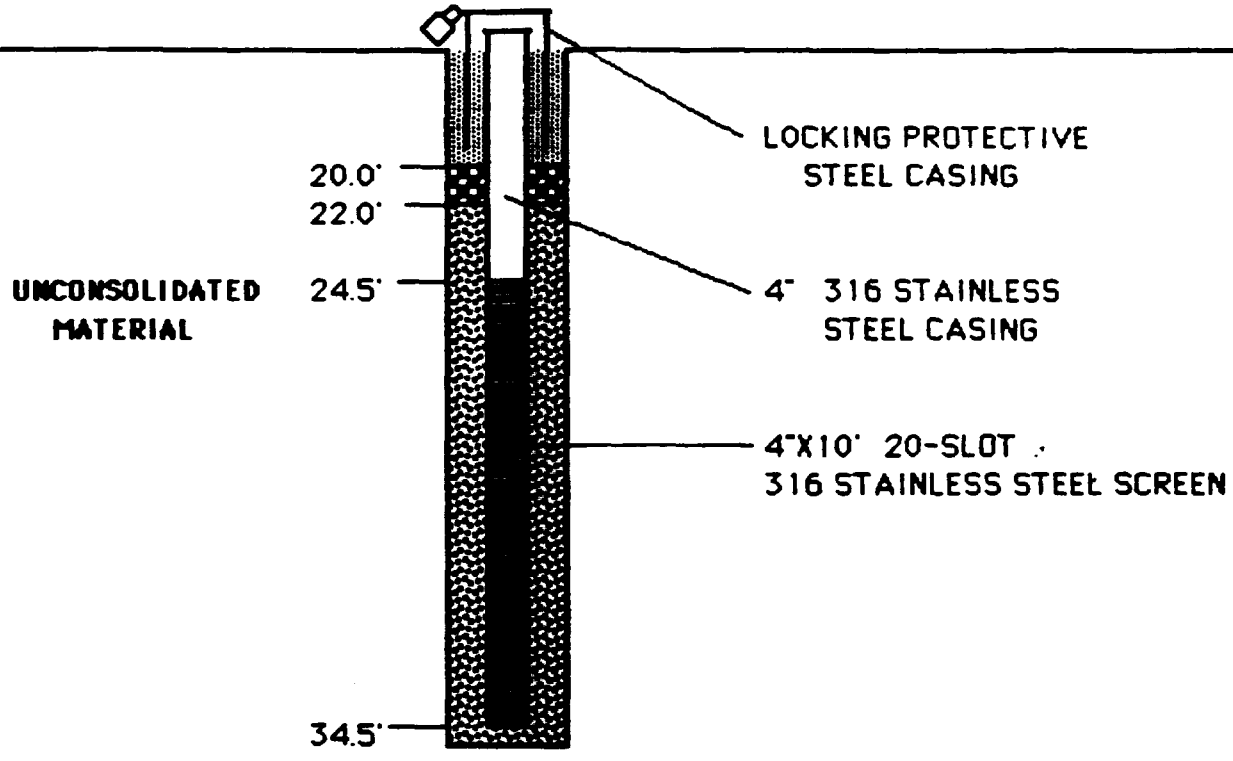

NOT TO SCALE

LEGEND

- CEMENT GROUT OR BENTONITE SLURRY
- BENTONITE PELLETS
- GRAVEL PACK

MONITOR WELL CONSTRUCTION DIAGRAM
MILLINGTON SITE
MILLINGTON N.J.

ASB 002 1012

Prepared by: Fred C. Hart Associates, Inc.

HART WELLS

MW-904

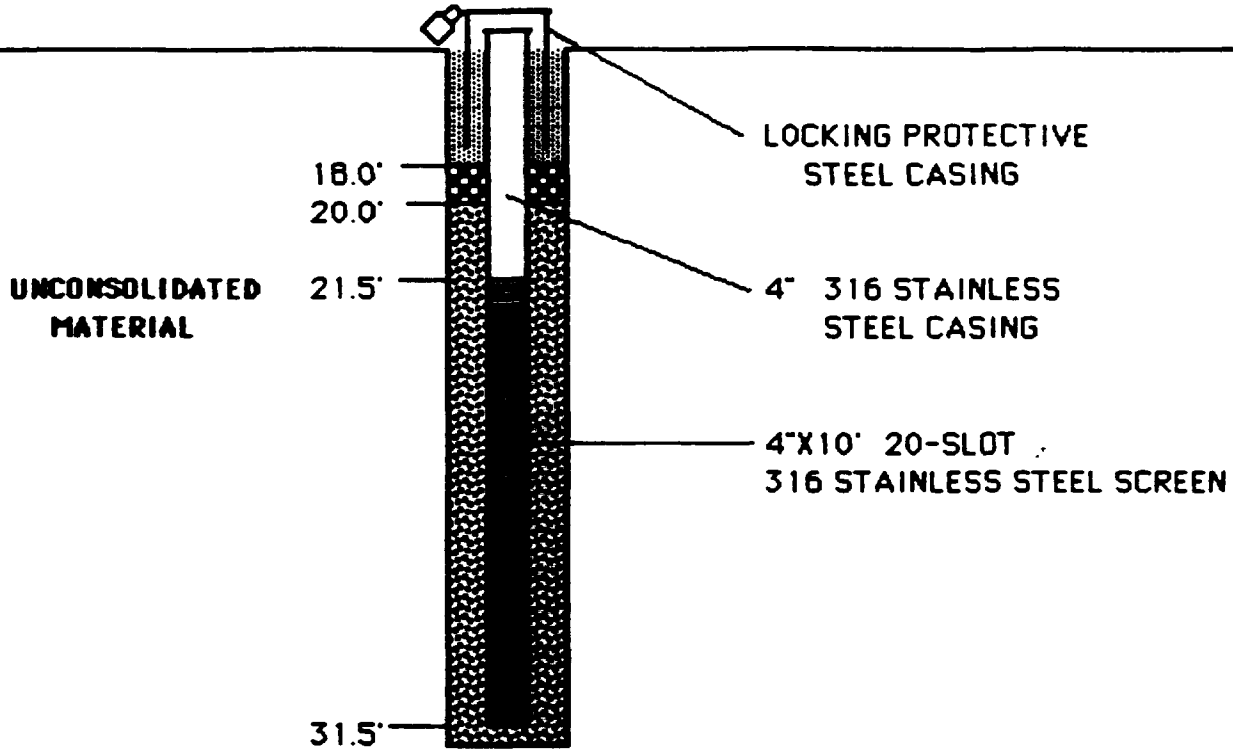

NOT TO SCALE

LEGEND

- CEMENT GROUT OR BENTONITE SLURRY
- BENTONITE PELLETS
- GRAVEL PACK

MONITOR WELL CONSTRUCTION DIAGRAM
MILLINGTON SITE
MILLINGTON N.J.

Prepared by: Fred C. Hart Associates, Inc.

ASB 002 1013

HART WELLS

MW-905

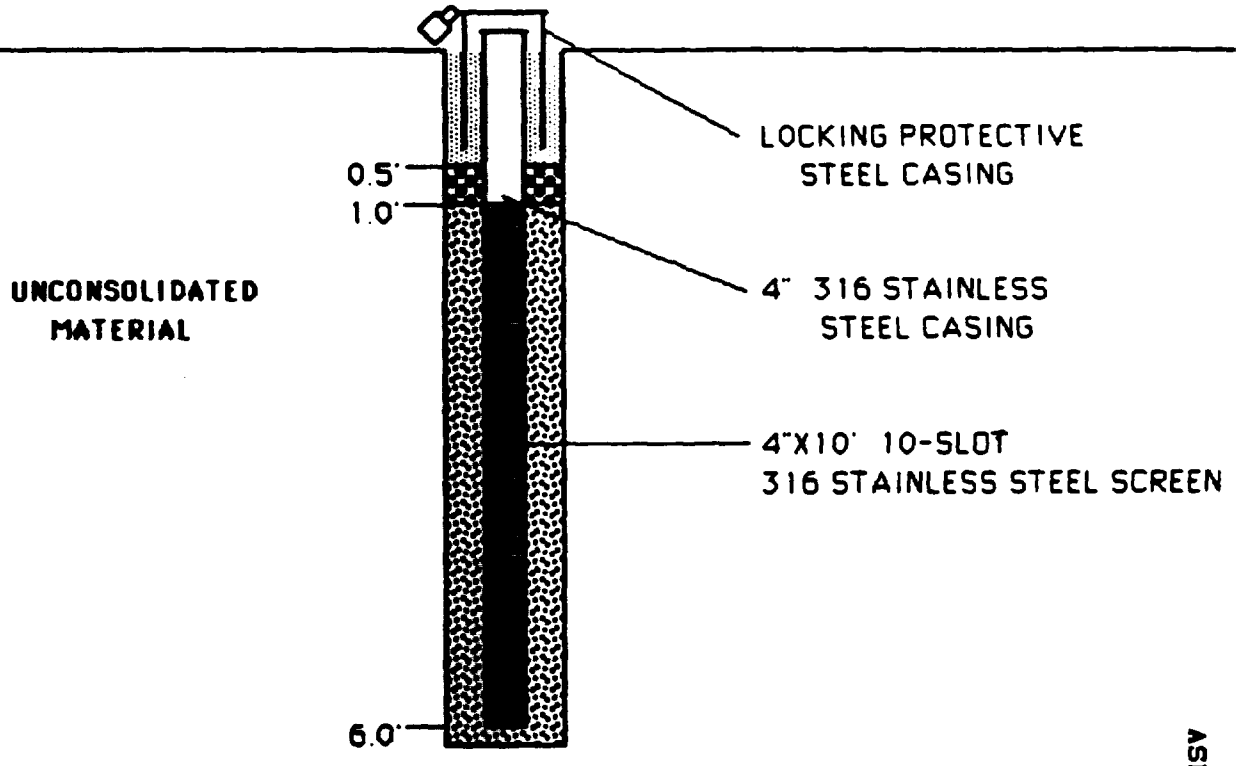

NOT TO SCALE

LEGEND

- CEMENT GROUT OR BENTONITE SLURRY
- BENTONITE PELLETS
- GRAVEL PACK

MONITOR WELL CONSTRUCTION DIAGRAM
MILLINGTON SITE
MILLINGTON N.J.

Prepared by: Fred C. Hart Associates, Inc.

ASB 002 1014

HART WELLS

MW-906

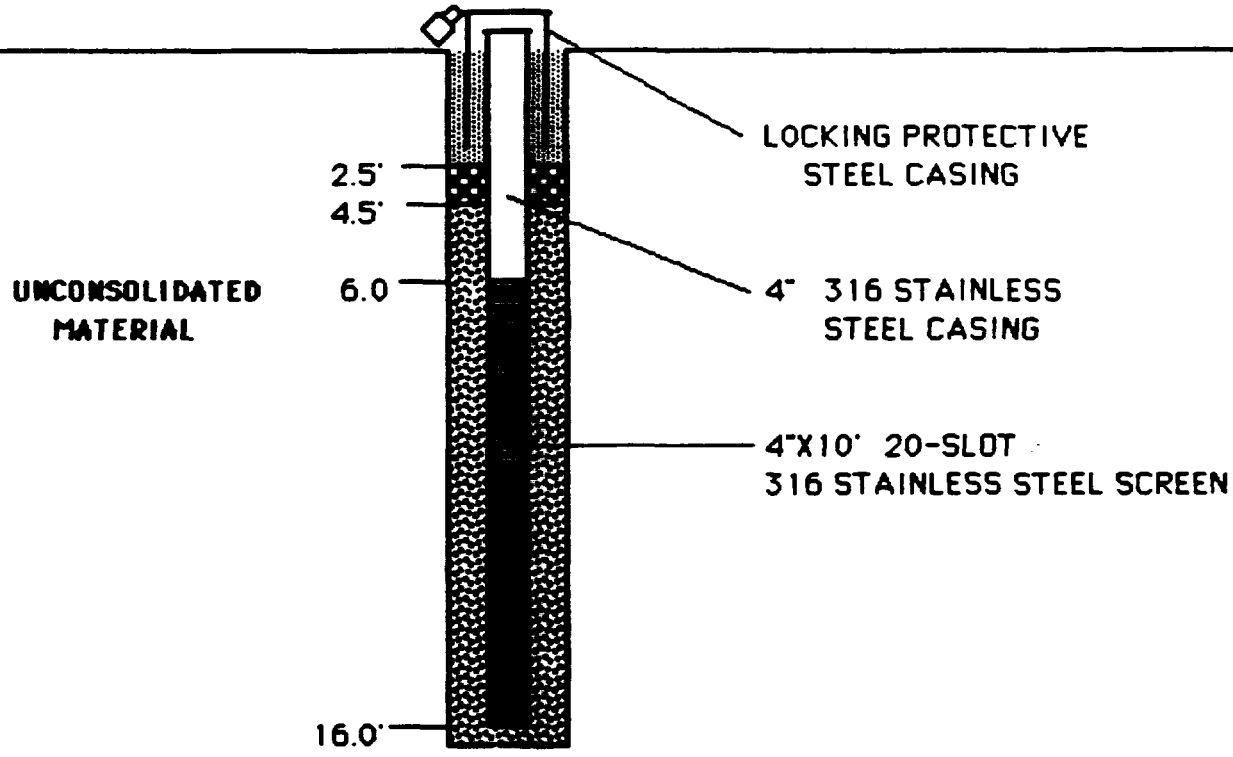

NOT TO SCALE

LEGEND

- CEMENT GROUT OR BENTONITE SLURRY
- BENTONITE PELLETS
- GRAVEL PACK

MONITOR WELL CONSTRUCTION DIAGRAM
MILLINGTON SITE
MILLINGTON N.J.

ASB 002 1015

Prepared by: Fred C. Hart Associates, Inc.

HART WELLS

MW-907

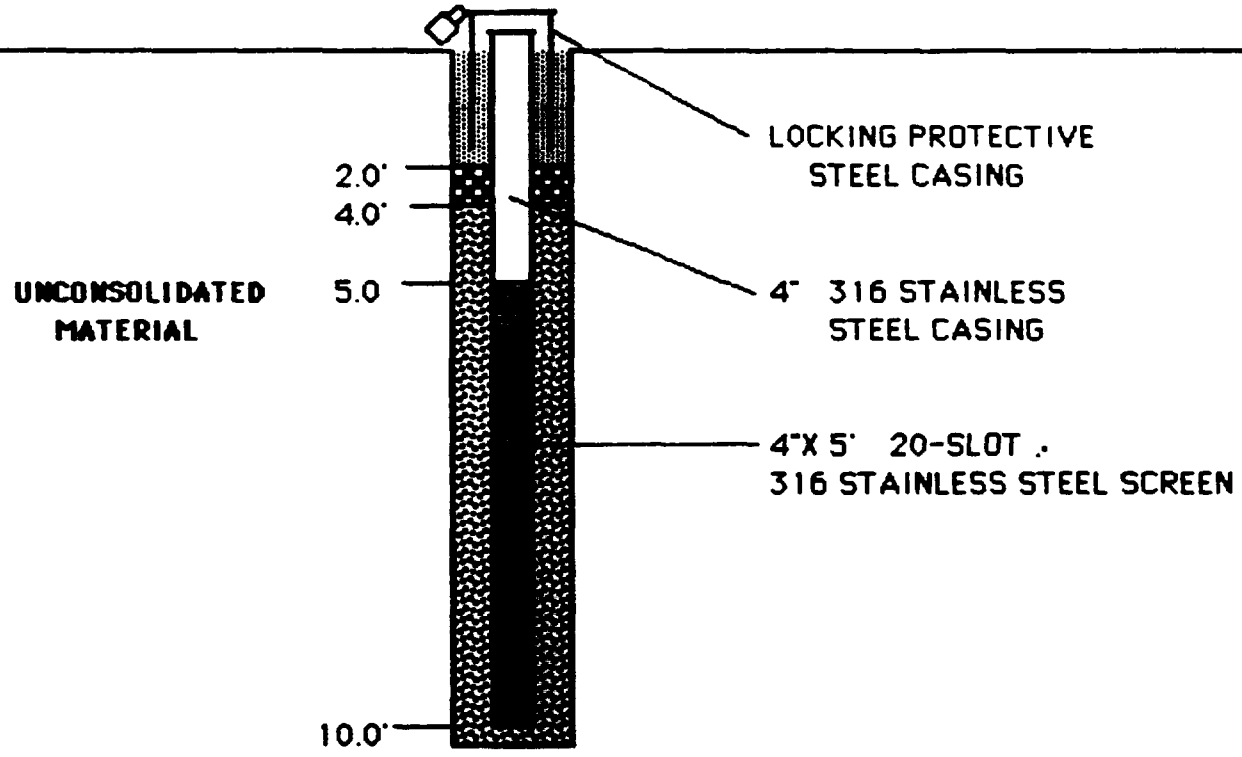

NOT TO SCALE

LEGEND

- CEMENT GROUT OR BENTONITE SLURRY
- BENTONITE PELLETS
- GRAVEL PACK

MONITOR WELL CONSTRUCTION DIAGRAM
MILLINGTON SITE
MILLINGTON N.J.

Prepared by: Fred C. Hart Associates, Inc.

ASB 002 1016

APPENDIX D
ENGINEERING ANALYSIS

ASB 002 1017

SLOPE STABILITY ANALYTICAL DATA

ASB 002 1018

Problem Statement:

Determine the stability of the asbestos pile on the Millington site. Determine remedial actions to be taken to improve stability if needed.

Development:

Assume most critical case is slope of asbestos pile along Passaic River.

Assume cross-section B-B' shown in Figure 4-3 is typical representative section of most critical case (for plan location of Cross-Section B-B', see Figure 4-1.

Subsurface stratigraphy generalized from test borings 902, 903, 904, 905 and 907.

Existing ground water level inferred from water level readings taken in monitoring wells 902, 903, 904 and 907.

Assumed ground water level set above existing g.w.l. for conservative analysis.

Material properties and strength values for asbestos based on laboratory tests conducted on relatively undisturbed samples. (See Section 3.5).

Material properties and strength values for soil and rock zones assumed based on some lab data and empirical correlations for strength values based on Standards Penetration Resistance.

Determine the factor of safety of potential critical failure surfaces using STABL3 computer program which applies the modified Bishop method and the simplified Janbu method.

ASB 002 1019

Case I: Existing Slope

See attached computer output for complete results.

F.S. = 0.962 Static conditions
F.S. = 0.815 Earthquake loading

Results indicate slope has reached some type of equilibrium condition, ie, the slope is standing, however F.S. <1.0 - slope is considered unstable. "Cut back" slope to some stable angle for stability.

By trial and error, find

Case II: 2.5H: IV Slope

F.S. = 1.633 Static conditions
F.S. = 1.633 >F.S. = 1.5 = safe
F.S. = 1.273 Earthquake loading
F.S. = 1.273 >F.S. = 1.2 = safe

The most critical failure surfaces (static and earthquake) for both cases are shown on Figures 3-9 and 3-10.

ASB 002 1020

SLOPE STABILITY ANALYSIS
SIMPLIFIED JANBU METHOD OF SLICES
IRREGULAR FAILURE SURFACES

Problem Description

Existing Slope
Static Condition

Boundary Coordinates

10 Top Boundaries
12 Total Boundaries

Boundary No.	X-Left (Ft)	Y-Left (Ft)	X-Right (Ft)	Y-Right (Ft)	Soil Type Below BND
1	.00	215.00	14.50	215.00	3
2	14.50	215.00	15.00	217.00	2
3	15.00	217.50	20.50	219.00	2
4	20.50	219.00	22.00	220.00	1
5	22.00	220.00	31.00	230.00	1
6	31.00	230.00	43.00	240.00	1
7	43.00	240.00	55.00	248.00	1
8	55.00	248.00	76.00	250.00	1
9	76.00	250.00	97.00	252.00	1
10	97.00	252.00	115.00	253.00	1
11	20.50	219.00	115.00	220.00	2
12	14.50	215.00	115.00	215.00	3

1 Isotropic Soil Parameters

3 Type(s) of Soil

Piezometric Surface No.	Soil Type No.	Total Unit Wt. (PCF)	Saturated Unit Wt. (PCF)	Cohesion Intercept (PSF)	Friction Angle (DEG)	Pore Pressure Parameter	Pressure Constant (PSF)
1	1	85.0	85.0	150.0	15.0	.00	.0
1	2	125.0	125.0	1000.0	.0	.00	.0
1	3	140.0	140.0	1000.0	45.0	.00	.0

1 Piezometric Surface(s) have been specified
unit weight of water = 62.40

(0665n-3)

Piezometric Surface No. 1 Specified by 3 Coordinate Points

Point No	X-Water (Ft)	Y-Water (Ft)
1	.00	217.00
2	55.00	220.00
3	115.00	230.00

A critical failure surface searching method, using a random technique for generating circular surfaces, has been specified.

125 trial surface have been generated.

25 surfaces initiate from each of 5 points equally spaced along the ground surface between x = 15.00 ft.
and x = 35.00 ft.

Each surface terminates between x = 45.00 ft.
and x = 75.00 ft.

Unless further limitations were imposed, the minimum elevation at which a surface extends is Y = .00 ft.

10.00 ft. line segments define each trial failure surface.

Following are displayed the ten most critical of the trial failure surfaces examined. They are ordered - most critical first.

Safety factors are calculated by the modified Bishop method

Failure surface specified by 7 coordinate points

Point No	X-Surf (Ft)	Y-Surf (Ft)
1	20.00	218.86
2	29.90	220.27
3	39.38	223.45
4	48.14	228.28
5	55.87	234.62
6	62.34	242.25
7	66.26	249.07

.962

ASB 002 1022

Failure Surface Specified by 8 Coordinate Points

Point No	X-Surf (Ft)	Y-Surf (Ft)
1	20.00	218.86
2	29.86	220.52
3	39.37	223.60
4	48.33	228.05
5	56.54	233.76
6	63.83	240.60
7	70.04	248.44
8	70.65	249.49

.966

Failure Surface Specified by 8 Coordinate Points

Point No	X-Surf (Ft)	Y-Surf (Ft)
1	20.00	218.86
2	29.91	220.20
3	39.46	223.16
4	48.40	227.65
5	56.47	233.56
6	63.45	240.71
7	69.16	248.92
8	69.38	249.37

.969

Failure Surface Specified by 8 Coordinate Points

Point No	X-Surf (Ft)	Y-Surf (Ft)
1	20.00	218.86
2	29.88	220.40
3	39.47	223.24
4	48.59	227.34
5	57.08	232.62
6	64.79	238.99
7	71.58	246.34
8	74.01	249.81

.983

ASB 002 1023

Failure Surface Specified by 6 Coordinate Points

Point No	X-Surf (Ft)	Y-Surf (Ft)
1	25.00	223.33
2	34.94	224.41
3	44.35	227.79
4	52.71	233.28
5	59.55	240.58
6	64.26	248.88

1.007

Failure Surface Specified by 7 Coordinate Points

Point No	X-Surf (Ft)	Y-Surf (Ft)
1	25.00	223.33
2	34.94	224.39
3	44.40	227.64
4	52.89	232.92
5	59.98	239.97
6	65.32	248.43
7	65.51	249.00

1.008

Failure Surface Specified by 7 Coordinate Points

Point No	X-Surf (Ft)	Y-Surf (Ft)
1	25.00	223.33
2	34.87	224.93
3	44.22	228.47
4	52.68	233.81
5	59.90	240.73
6	65.59	248.95
7	65.61	249.01

1.009

ASB 002 1024

Failure Surface Specified by 7 Coordinate Points

Point No	X-Surf (Ft)	Y-Surf (Ft)
1	20.00	218.86
2	29.95	219.82
3	39.34	223.26
4	47.56	228.96
5	54.06	236.56
6	58.43	245.55
7	58.99	248.38

1.014

Failure Surface Specified by 7 Coordinate Points

Point No	X-Surf (Ft)	Y-Surf (Ft)
1	25.00	223.33
2	34.81	225.26
3	44.28	228.48
4	53.23	232.94
5	61.50	238.56
6	68.94	245.24
7	72.72	249.69

1.049

Failure Surface Specified by 6 Coordinate Points

Point No	X-Surf (Ft)	Y-Surf (Ft)
1	25.00	223.33
2	35.00	223.39
3	44.38	226.86
4	52.01	233.32
5	56.98	242.00
6	58.08	248.29

1.049

ASB 002 1025

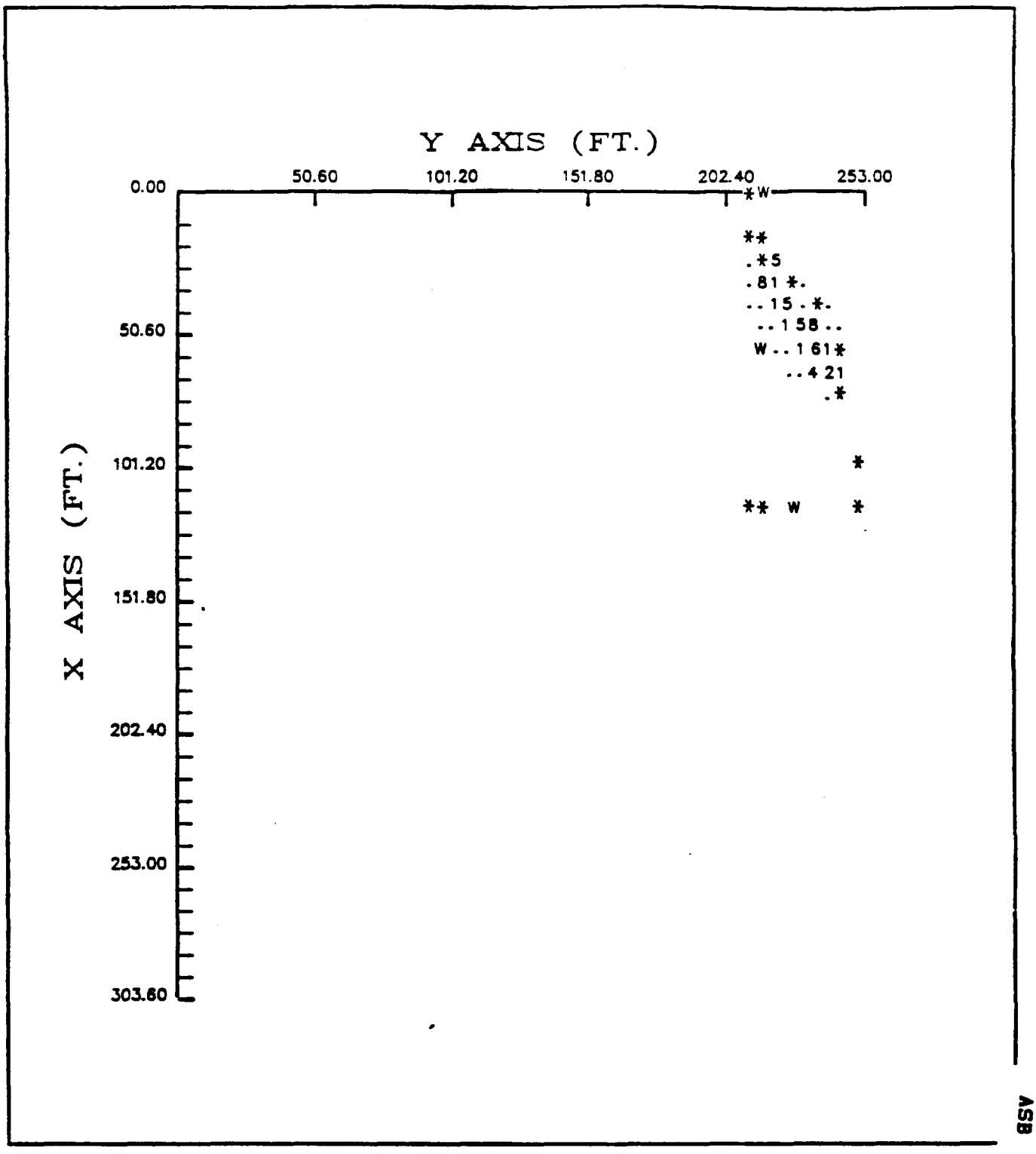
Y AXIS (FT.)
0.00
50.60
101.20
151.80
202.40
253.00
X AXIS (FT.)
50.60
101.20
151.80
202.40
253.00
303.60
*W
**
.*5
.81 *.
..15.*.
..158..
W..161*
..421
.*
*
** W *

ASB 002 1026

SLOPE STABILITY ANALYSIS
SIMPLIFIED JANBU METHOD OF SLICES
IRREGULAR FAILURE SURFACES

Problem Description

Existing Slope
Earthquake Loads

Boundary Coordinates

10 Top Boundaries
12 Total Boundaries

Boundary No.	X-Left (Ft)	Y-Left (Ft)	X-Right (Ft)	Y-Right (Ft)	Soil Type Below BND
1	.00	215.00	14.50	215.00	3
2	14.50	215.00	15.00	217.50	2
3	15.00	217.50	20.50	219.00	2
4	20.50	219.00	22.00	220.00	1
5	22.00	220.00	31.00	230.00	1
6	31.00	230.00	43.00	240.00	1
7	43.00	240.00	55.00	248.00	1
8	55.00	248.00	76.00	250.00	1
9	76.00	250.00	97.00	252.00	1
10	97.00	252.00	115.00	253.00	1
11	20.50	219.00	115.00	220.00	2
12	14.50	215.00	115.00	215.00	3

1 Isotropic Soil Parameters

3 Type(s) of Soil

Piezometric Surface No.	Soil Type No.	Total Unit Wt. (PCF)	Saturated Unit Wt. (PCF)	Cohesion Intercept (PSF)	Friction Angle (DEG)	Pore Pressure Parameter	Pressure Constant (PSF)
1	1	85.0	85.0	150.0	15.0	.00	.0
1	2	125.0	125.0	1000.0	.0	.00	.0
1	3	140.0	140.0	1000.0	45.0	.00	.0

1 Piezometric Surface(s) have been specified
unit weight of water = 62.40

Piezometric Surface No. 1 Specified by 3 Coordinate Points

Point No	X-Water (Ft)	Y-Water (Ft)
1	.00	217.00
2	55.00	220.00
3	115.00	230.00

(0665n-9)

ASB 002 1027

A horizontal earthquake loading coefficient of .100 has been assigned

A vertical earthquake loading coefficient of .000 has been assigned

Cavitation pressure = .0 PSF

A critical failure surface searching method, using a random technique for generating circular surfaces, has been specified.

125 trial surfaces have been generated.

25 surfaces initiate from each of 5 points equally spaced along the ground surface between x = 15.00 ft.
and x = 35.00 ft.

Each surface terminates between x = 45.00 ft.
and x = 75.00 ft.

Unless further limitations were imposed, the minimum elevation at which a surface extends is Y = .00 ft.

10.00 ft. line segment define each trial failure surface examined. They are ordered - most critical first.

Following are displayed the ten most critical of the trial failure surfaces examined. They are ordered - most critical first.

Safety factors are calculated by the modified Bishop method.

Failure Surface Specified by 8 Coordinate Points

Point No	X-Surf (Ft)	Y-Surf (Ft)
1	20.00	218.86
2	29.86	220.52
3	39.37	223.61
4	48.33	228.05
5	56.54	233.76
6	63.83	240.60
7	70.04	248.44
8	70.65	249.49

.815

ASB 002 1028

Failure Surface Specified by 7 Coordinate Points

Point No	X-Surf (Ft)	Y-Surf (Ft)
1	20.00	218.86
2	29.90	220.27
3	39.38	223.45
4	48.14	228.28
5	55.87	234.62
6	62.34	242.25
7	66.26	249.07

.820

Failure Surface Specified by 8 Coordinate Points

Point No	X-Surf (Ft)	Y-Surf (Ft)
1	20.00	218.86
2	29.91	220.20
3	39.46	223.16
4	48.40	227.65
5	56.47	233.56
6	63.45	240.71
7	69.16	248.92
8	69.38	249.37

.821

Failure Surface Specified by 8 Coordinate Points

Point No	X-Surf (Ft)	Y-Surf (Ft)
1	20.00	218.86
2	29.88	220.40
3	39.47	223.24
4	48.59	227.34
5	57.08	232.62
6	64.79	238.99
7	71.58	246.34
8	74.01	249.81

.821

ASB 002 1029

Failure Surface Specified by 7 Coordinate Points

Point No	X-Surf (Ft)	Y-Surf (Ft)
1	25.00	223.33
2	34.94	224.39
3	44.40	227.64
4	52.89	232.92
5	59.98	239.97
6	65.32	248.43
7	65.51	249.00

.854

Failure Surface Specified by 7 Coordinate Points

Point No	X-Surf (Ft)	Y-Surf (Ft)
1	25.00	223.33
2	34.87	224.93
3	44.22	228.47
4	52.68	233.81
5	59.90	240.73
6	65.59	248.95
7	65.61	249.01

.854

Failure Surface Specified by 6 Coordinate Points

Point No	X-Surf (Ft)	Y-Surf (Ft)
1	25.00	223.33
2	34.94	224.41
3	44.35	227.79
4	52.71	233.28
5	59.55	240.58
6	64.26	248.88

.856

ASB 002 1030

Failure Surface Specified by 7 Coordinate Points

Point No	X-Surf (Ft)	Y-Surf (Ft)
1	25.00	223.33
2	34.81	225.26
3	44.28	228.48
4	53.23	232.94
5	61.50	238.56
6	68.94	245.24
7	72.72	249.69

.869

Failure Surface Specified by 7 Coordinate Points

Point No	X-Surf (Ft)	Y-Surf (Ft)
1	25.00	223.33
2	35.00	223.58
3	44.77	225.72
4	53.95	229.67
5	62.21	235.31
6	69.25	242.41
7	74.23	249.83

.879

Failure Surface Specified by 7 Coordinate Points

Point No	X-Surf (Ft)	Y-Surf (Ft)
1	20.00	218.86
2	29.95	219.82
3	39.34	223.26
4	47.56	228.96
5	54.06	236.56
6	58.43	245.55
7	58.99	248.38

.880

ASB 002 1031

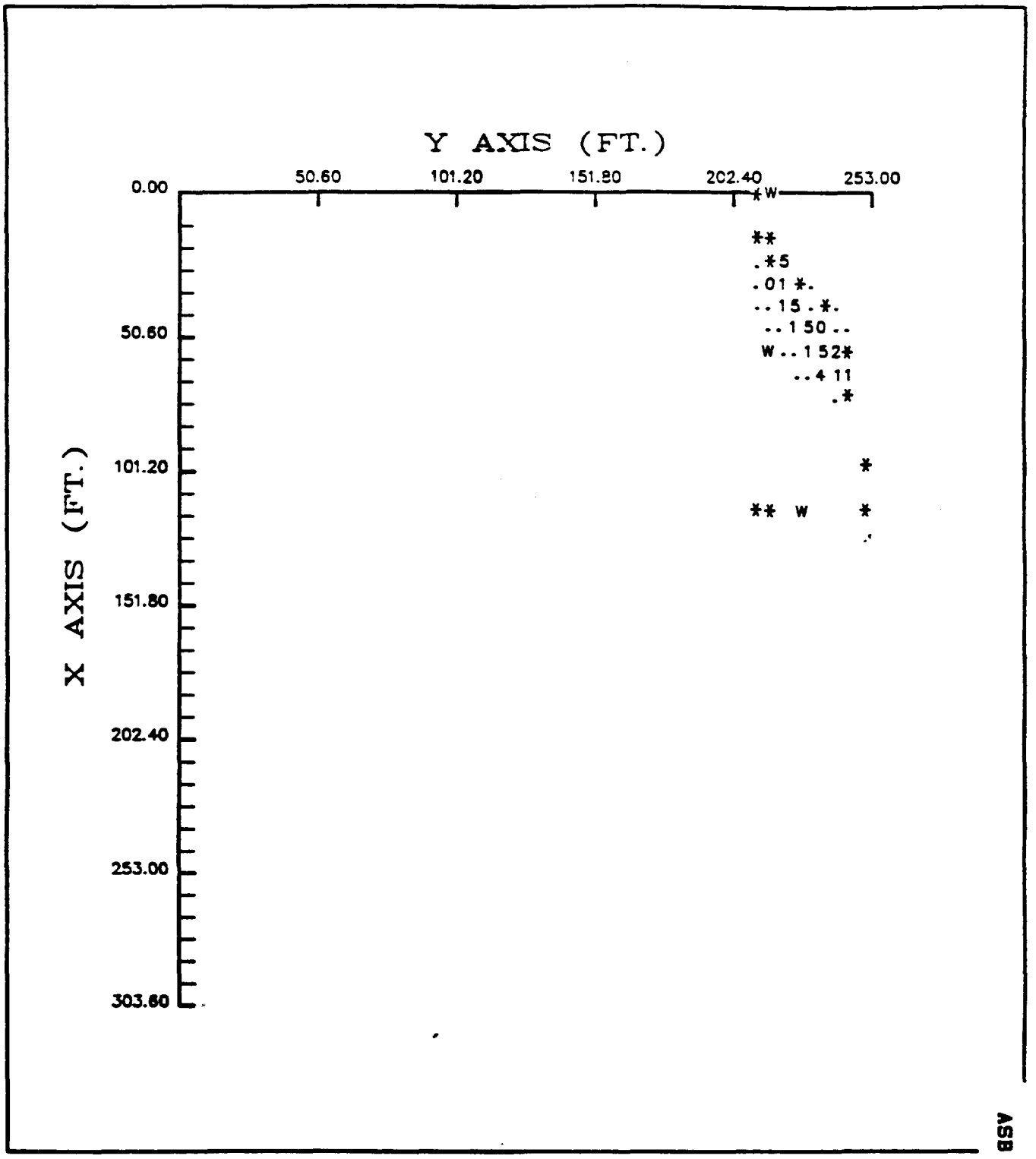
Y AXIS (FT.)
0.00
50.60
101.20
151.80
202.40
253.00
X AXIS (FT.)
50.60
101.20
151.80
202.40
253.00
303.60
*W
**
.*5
.01 *.
..15 .*.
..150..
W..152*
..411
.*
*
** W *

ASB 002 1032

SLOPE STABILITY ANALYSIS
SIMPLIFIED JANBU METHOD OF SLICES
IRREGULAR FAILURE SURFACES

Problem Description

2.5H = IV Slope
Static Condition

Boundary Coordinates

5 Top Boundaries
7 Total Boundaries

Boundary No.	X-Left (Ft)	Y-Left (Ft)	X-Right (Ft)	Y-Right (Ft)	Soil Type Below BND
1	.00	215.00	14.50	215.00	3
2	14.50	215.00	16.00	217.00	2
3	16.00	217.00	20.00	219.00	2.
4	20.00	219.00	107.00	252.50	1
5	107.00	252.50	115.00	253.00	1
6	20.00	219.00	115.00	219.00	2
7	14.50	215.00	115.00	215.00	3

1 Isotropic Soil Parameters

3 Type(s) of Soil

Piezometric Surface No.	Soil Type No.	Total Unit Wt. (PCF)	Saturated Unit Wt. (PCF)	Cohesion Intercept (PSF)	Friction Angle (DEG)	Pore Pressure Parameter	Pressure Constant (PSF)
1	1	85.0	85.0	150.0	15.0	.00	.0
1	2	125.0	125.0	1000.0	.0	.00	.0
1	3	140.0	140.0	1000.0	45.0	.00	.0

1 Piezometric Surface(s) have been specified
unit weight of water = 62.40

Piezometric Surface No. 1 Specified by 5 Coordinate Points

Point No	X-Water (Ft)	Y-Water (Ft)
1	.00	217.00
2	16.00	217.00
3	45.00	220.00
4	75.00	228.00
5	115.00	235.00

ASB 002 1033

A horizontal earthquake loading coefficient of .000 has been assigned

A vertical earthquake loading coefficient of .000 has been assigned

Cavitation pressure = .0 PSF

A critical failure surface searching method, using a random technique for generating circular surfaces, has been specified.

25 trial surfaces have been generated.

5 surfaces initiate from each of 5 points equally spaced along the ground surface between x = 17.00 ft.
and x = 55.00 ft.

Each surface terminated between x = 75.00 ft.
and x = 115.00 ft.

Unless further limitations were imposed, the minimum elevation at which a surface extends is Y = .00 ft.

10.00 ft. line segments define each trial failure surface

Following are displayed the ten most critical of the trial failure surfaces examined. They are ordered - most critical first.

Safety factors are calculated by the modified Bishop method.

Failure Surface Specified by 8 Coordinate Points

Point No	X-Surf (Ft)	Y-Surf (Ft)
1	26.50	221.50
2	36.28	219.43
3	46.28	219.31
4	56.11	221.15
5	65.40	224.87
6	73.77	230.33
7	80.92	237.32
8	85.70	244.30

1.633

ASB 002 1034

Failure Surface Specified by 9 Coordinate Points

Point No	X-Surf (Ft)	Y-Surf (Ft)
1	26.50	221.50
2	36.26	219.34
3	46.25	218.90
4	56.17	220.17
5	65.73	223.12
6	74.63	227.68
7	82.62	233.69
8	89.46	240.99
9	93.62	247.35

1.637

Failure Surface Specified by 8 Coordinate Points

Point No	X-Surf (Ft)	Y-Surf (Ft)
1	55.00	232.48
2	64.81	230.54
3	74.81	230.44
4	84.66	232.19
5	94.01	235.72
6	102.56	240.91
7	110.00	247.59
8	114.12	252.94

1,683

Failure Surface Specified by 8 Coordinate Points

Point No	X-Surf (Ft)	Y-Surf (Ft)
1	55.00	232.48
2	64.44	229.19
3	74.38	228.08
4	84.32	229.20
5	93.75	232.51
6	102.22	237.83
7	109.29	244.91
8	114.35	252.96

1.684

ASB 002 1035

Failure Surface Specified by 9 Coordinate Points

Point No	X-Surf (Ft)	Y-Surf (Ft)
1	45.50	228.82
2	53.54	222.88
3	62.98	219.56
4	72.97	219.17
5	82.63	221.74
6	91.12	227.04
7	97.66	234.60
8	101.69	243.75
9	102.52	250.77

1.699

Failure Surface Specified by 8 Coordinate Points

Point No	X-Surf (Ft)	Y-Surf (Ft)
1	55.00	232.48
2	63.87	227.86
3	73.68	225.90
4	83.64	226.75
5	92.97	230.35
6	100.93	236.40
7	106.88	244.44
8	109.94	252.68

1.755

Failure Surface Specified by 8 Coordinate Points

Point No	X-Surf (Ft)	Y-Surf (Ft)
1	45.50	228.82
2	53.61	222.97
3	63.20	220.13
4	73.19	220.61
5	82.46	224.36
6	89.98	230.96
7	94.89	239.67
8	96.47	248.45

1.838

ASB 002 1036

Failure Surface Specified by 7 Coordinate Points

Point No	X-Surf (Ft)	Y-Surf (Ft)
1	45.50	228.82
2	54.72	224.96
3	64.69	224.10
4	74.43	226.33
5	83.03	231.44
6	89.66	238.93
7	93.29	247.22

1.857

Failure Surface Specified by 10 Coordinate Points

Point No	X-Surf (Ft)	Y-Surf (Ft)
1	36.00	225.16
2	45.95	226.12
3	55.82	227.77
4	65.54	230.09
5	75.08	233.09
6	84.40	236.73
7	93.43	241.01
8	102.15	245.91
9	110.51	251.40
10	112.40	252.84

1.862

Failure Surface Specified by 10 Coordinate Points

Point No	X-Surf (Ft)	Y-Surf (Ft)
1	36.00	225.16
2	45.49	222.02
3	55.49	221.82
4	65.10	224.59
5	73.46	230.07
6	79.83	237.78
7	81.92	242.84

*** 1.866 ***

ASB 002 1037

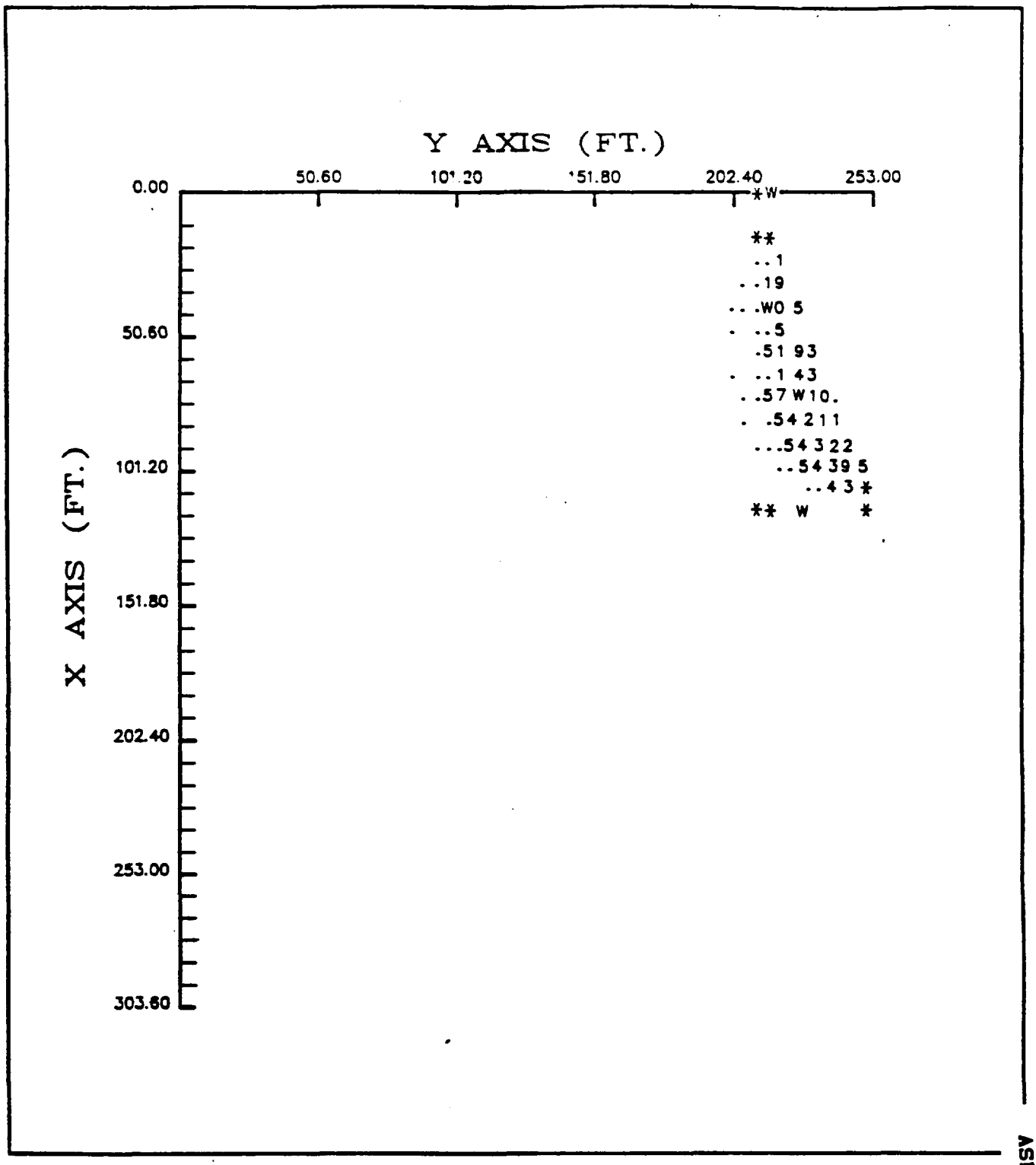
Y AXIS (FT.)
0.00
50.60
101.20
151.80
202.40
253.00
X AXIS (FT.)
50.60
101.20
151.80
202.40
253.00
303.60
*W
**
..1
..19
..W0 5
..5
.51 93
..1 43
.57 W10.
.54 211
...54 322
..54 39 5
..4 3 *
** W *

ASB 002 1038

SLOPE STABILITY ANALYSIS
SIMPLIFIED JANBU METHOD OF SLICES
IRREGULAR FAILURE SURFACES

Problem Description

2.5 H: IV Slope
Earthquake Loading

Boundary Coordinates

5 Top Boundaries
7 Total Boundaries

Boundary No.	X-Left (Ft)	Y-Left (Ft)	X-Right (Ft)	Y-Right (Ft)	Soil Type Below BND
1	.00	215.00	14.50	215.00	3
2	14.50	215.00	16.00	217.00	2
3	16.00	217.00	20.00	219.00	2
4	20.00	219.00	107.00	252.50	1
5	107.00	252.50	115.00	253.00	1
6	20.00	219.00	115.00	219.00	2
7	14.50	215.00	115.00	215.00	3

1 Isotropic Soil Parameters

3 Type(s) of Soil

Piezometric Surface No.	Soil Type No.	Total Unit Wt. (PCF)	Saturated Unit Wt. (PCF)	Cohesion Intercept (PSF)	Friction Angle (DEG)	Pore Pressure Parameter	Pressure Constant (PSF)
1	1	85.0	85.0	150.0	15.0	.00	.0
1	2	125.0	125.0	1000.0	.0	.00	.0
1	3	140.0	140.0	1000.0	45.0	.00	.0

1 Piezometric Surface(s) have been specified
unit weight of water = 62.40

Piezometric Surface No. 1 Specified by 5 Coordinate Points

Point No	X-Water (Ft)	Y-Water (Ft)
1	.00	217.00
2	16.00	217.00
3	45.00	220.00
4	75.00	228.00
5	115.00	235.00

ASB 002 1039

A horizontal earthquake loading coefficient of .100 has been assigned

A vertical earthquake loading coefficient of .000 has been assigned

Cavitation pressure = .0 PSF

A critical failure surface searching method, using a random technique for generating circular surfaces, has been specified.

25 trial surfaces have been generated.

5 surfaces initiate from each of 5 points equally spaced along the ground surface between x = 17.00 ft.
and x = 55.00 ft.

Each surface terminates between x = 75.00 ft.
and x = 115.00 ft.

Unless further limitations were imposed, the minimum elevation at which a surface extends is Y = .00 ft.

10.00 Ft. line segments define each trial failure surface.

Following are displayed the ten most critical of the trial failure surfaces examined. They are ordered - most critical first.

Safety factors are calculated by the modified Bishop method.

Failure Surface Specified by 8 Coordinate Points

Point No	X-Surf (Ft)	Y-Surf (Ft)
1	26.50	221.50
2	36.28	219.43
3	46.28	219.31
4	56.11	221.15
5	65.40	224.87
6	73.77	230.33
7	80.92	237.32
8	85.70	244.30

1.273

ASB 002 1040

Failure Surface Specified by 9 Coordinate Points

Point No	X-Surf (Ft)	Y-Surf (Ft)
1	26.50	221.50
2	36.26	219.34
3	46.25	218.90
4	56.17	220.17
5	65.73	223.12
6	74.63	227.68
7	82.62	233.69
8	89.46	240.99
9	93.62	247.35

1.278

Failure Surface Specified by 8 Coordinate Points

Point No	X-Surf (Ft)	Y-Surf (Ft)
1	55.00	232.48
2	64.81	230.54
3	74.81	230.44
4	84.66	232.19
5	94.01	235.72
6	102.56	240.91
7	110.00	247.59
8	114.12	252.94

1.303

Failure Surface Specified by 8 Coordinate Points

Point No	X-Surf (Ft)	Y-Surf (Ft)
1	55.00	232.48
2	64.44	229.19
3	74.38	228.08
4	84.32	229.20
5	93.75	232.51
6	102.22	237.83
7	109.29	244.91
8	114.35	252.96

1.304

ASB 002 1041

Failure Surface Specified by 9 Coordinate Points

Point No	X-Surf (Ft)	Y-Surf (Ft)
1	45.50	228.82
2	53.54	222.88
3	62.98	219.56
4	72.97	219.17
5	82.63	221.74
6	91.12	227.04
7	97.66	234.60
8	101.69	243.75
9	102.52	250.77

1.322

Failure Surface Specified by 8 Coordinate Points

Point No	X-Surf (Ft)	Y-Surf (Ft)
1	55.00	232.48
2	63.87	227.86
3	73.68	225.90
4	83.64	226.75
5	92.97	230.35
6	100.93	236.40
7	106.88	244.44
8	109.94	252.68

1.366

Failure Surface Specified by 8 Coordinate Points

Point No	X-Surf (Ft)	Y-Surf (Ft)
1	45.50	228.82
2	53.61	222.97
3	63.20	220.13
4	73.19	220.61
5	82.46	224.36
6	89.98	230.96
7	94.89	239.67
8	96.47	248.45

1.429

ASB 002 1042

Failure Surface Specified by 7 Coordinate Points

Point No	X-Surf (Ft)	Y-Surf (Ft)
1	45.50	228.82
2	54.72	224.96
3	64.69	224.10
4	74.43	226.33
5	83.03	231.44
6	89.66	238.93
7	93.29	247.22

1.447

Failure Surface Specified by 7 Coordinate Points

Point No	X-Surf (Ft)	Y-Surf (Ft)
1	36.00	225.16
2	45.95	226.12
3	55.82	227.77
4	65.54	230.09
5	75.08	233.09
6	84.40	236.73
7	93.43	241.01
8	102.15	245.91
9	110.51	251.40
10	112.40	252.84

1.452

Failure Surface Specified by 7 Coordinate Points

Point No	X-Surf (Ft)	Y-Surf (Ft)
1	36.00	225.16
2	45.49	222.02
3	55.49	221.82
4	65.10	224.59
5	73.46	230.07
6	79.83	237.78
7	81.92	242.84

*** 1.455

ASB 002 1043

TABLE 4

ASB 002 1044

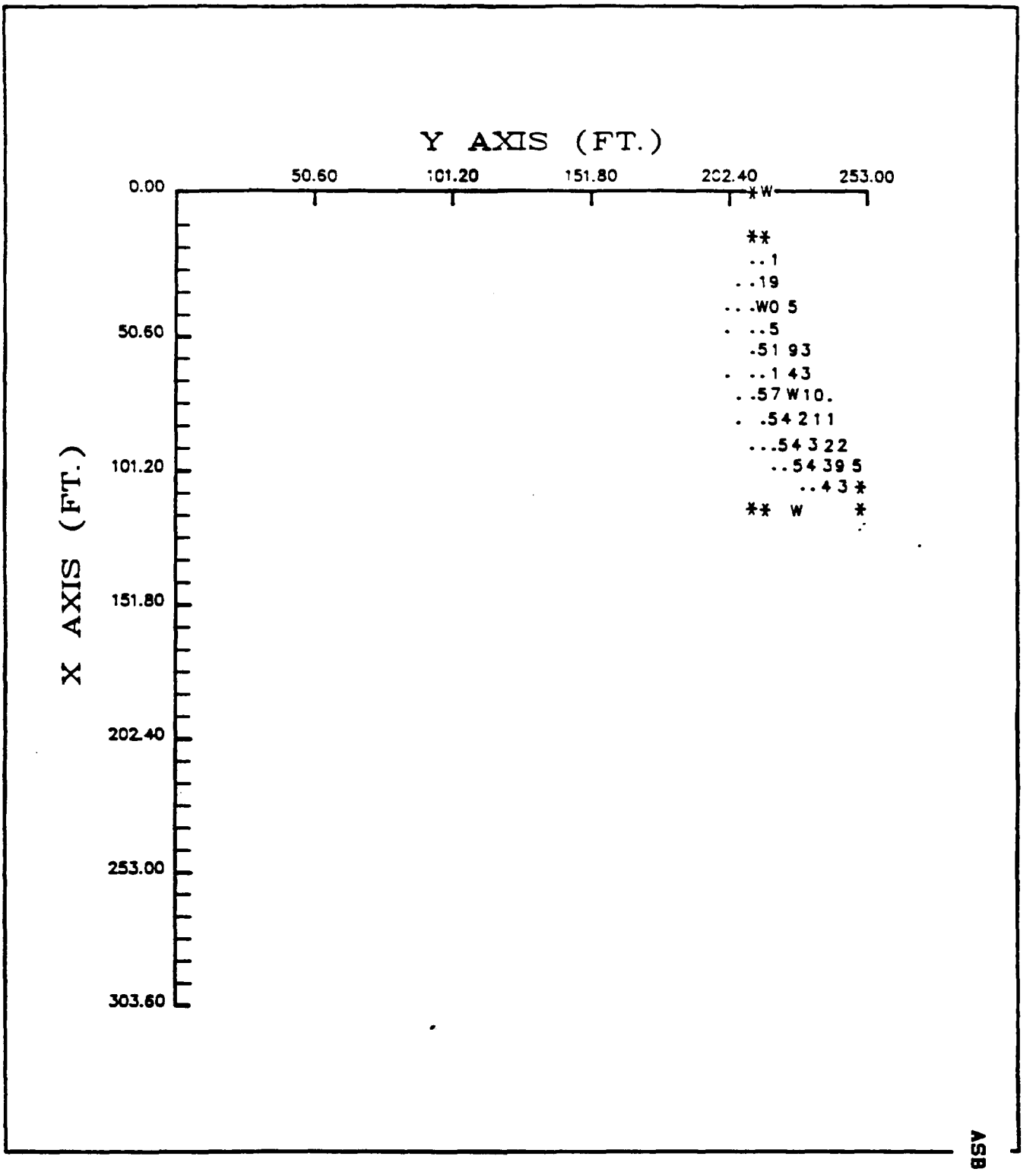
Y AXIS (FT.)
0.00
50.60
101.20
151.80
202.40
253.00
X AXIS (FT.)
50.60
101.20
151.80
202.40
253.00
303.60
*W
**
..1
..19
..W0 5
..5
.51 93
..1 43
.57W10.
.54211
...54322
..54395
..43*
** W *

ASB 002 1045

SUPPLEMENTAL ENGINEERING INVESTIGATION

DATA

ASB 002 1046

FRED C. HART ASSOCIATES, INC.

TEST BORING LOG

BORING/WELL LOCATION SKETCH MAP

N

BORING NO. TB1

PROJECT NO. NAME: [illegible] 1-37 [illegible]

LOCATION: Hillington Site

DRILLING CONTRACTOR. DRILLER: Hiller Drilling / Lou Scott

HART GEOLOGIST. OFFICE: Steve Humphries / L.C.

DRILLING EQUIPMENT. METHOD: Solid flite

SIZE. TYPE OF BIT:

SAMPLING METHOD: Split Spoon, Shelby

START. FINISH DATE: 11-12 & 11-13-87

WELL INSTALLED? YES ☐ NO ☑

CASING MAT./DIA.

SCREEN: TYPE MAT. LENGTH DIA. SLOT SIZE

ELEVATION OF: GROUND SURFACE TOP OF WELL CASING TOP & BOTTOM SCREEN GW SURFACE DATE
FT. ABOVE M.S.L.)

REMARKS:

DEPTH (FT)	SAMPLE NO. AND TYPE	RECOVERY (FT)	PENETRATION RESISTANCE BLOWS/FT	LOG OF TEST BORING: DESCRIPTION	REMARKS	WELL CONST.	GRAPHIC LITHO LOG
	SS #1	1.6	2-2 1-1	0-1.1' = Red/brown silty/sandy fill; feet = asbestos fiber waste fill			
	ST #1	19"/19"	—	asbestos fiber fill			
5	SS #2	2.0	1-1 1/12"	" " "			5
	ST #2	22"/24"	—	" " "			
	SS #3	2.0	2-3 2-2	" " "			
10	ST #3	3.5/24"	—	" " "			10
	SS #4	2.0	1-1 1-2	" " "			
15	ST #4	19"/24"	—	" " "			
	SS #5	2.0	2-2 2-3	" " "			
	ST #5	24"/24"	—	" " "			

Proportions Used: Trace = 0-10%, Little = 10-20%, Some = 20-35%, And = 35-50%

Sampling Abbreviations: SS = Split Spoon, ST = Shelby Tube, CSC = Continuous Soil Core

ASB 002 1047

FRED C. HART ASSOCIATES, INC.

BORING NO. TB 1

LOG OF TEST BORING

DEPTH (FT)	SAMPLE NO. AND TYPE	RECOVERY (FT)	PENETRATION RESISTANCE BLOWS/FT	DESCRIPTION	REMARKS	WELL CONST.	GRAPHIC LITHO LOG
22	SS #6	2.0	1-1 1-1	" " "			
24	ST #6	25" / 25"	—	" " "			
26	SS #7	2.0	1-2 4-4	" " "			
28	ST #7	26" / 26"	—	" " "			
30	SS #8	2.0	1-1 2-2	0-15' = same as above Rest = dark brown clayey silt			
	ST #9	15" / 24"	—	dark brown clayey silt			
	SS #10	0.9	6-24 50	0-0.35' = same as above Rest = weathered shale bedrock			

ASB 002 1048

HART

FRED C. HART ASSOCIATES, INC.

TEST BORING LOG

BORING/WELL LOCATION SKETCH MAP

N

BORING NO. TB 2

PROJECT NO. NAME: 5125-FC SSCE 1-17 Contaminant Investigation

LOCATION: Millington Site

DRILLING CONTRACTOR. DRILLER: Hulker Drilling

HART GEOLOGIST. OFFICE: Steve Hambe / Liberty Corner

DRILLING EQUIPMENT/METHOD:

SIZE. TYPE OF BIT:

SAMPLING METHOD: Split spoons / Shelby

START. FINISH DATE: 11-6 - 11-10-87

WELL INSTALLED? YES ☐ NO ☒

CASING MAT./DIA.:

SCREEN: TYPE MAT. LENGTH DIA. SLOT SIZE

ELEVATION OF: (FT. ABOVE M.S.L.) GROUND SURFACE TOP OF WELL CASING TOP & BOTTOM SCREEN GW SURFACE DATE

REMARKS:

DEPTH (FT)	SAMPLE NO. AND TYPE	RECOVERY (FT)	PENETRATION RESISTANCE BLOWS/FT	LOG OF TEST BORING: DESCRIPTION	REMARKS	WELL CONST.	GRAPHIC LITHO LOG
	SS #1	0.35	weight of hammer	0-0.1' = topsoil fill Rest = asbestos fiber fill			
	ST #1	22"/24"	—	" " "			
5	SS #2	1.4'	1/12" 1/12"	" " "			5
	ST #2	21"/24"	—	" " "			
	SS #3	1.9	1-2 2-3	" " "			
10	ST #3	25"/24"	—	" " "			10
	SS #4	1.0	1-1 1-1	" " "			
15	ST #4	4"/2"	—	" " "			15
	SS #5	2.0	1-2 3-3	" " "			
	SS #6	1.9	1-3 2-2	" " "			20

Proportions Used: Trace = 0-10%, Little = 10-20%, Some = 20-35%, And = 35-50%

Sampling Abbreviations: SS = Split Spoon, ST = Shelby Tube, CSC = Continuous Soil Core

ASB 002 1049

FRED C. HART ASSOCIATES, INC.

BORING NO. TB 2

LOG OF TEST BORING

DEPTH (FT)	SAMPLE NO. AND TYPE	RECOVERY (FT)	PENETRATION RESISTANCE BLOWS/FT	DESCRIPTION	REMARKS	WELL CONST.	GRAPHIC LITHO LOG
22	ST #5	15"/24"	—	asbestos fiber waste			
24	SS #7	1.5	4-6 7-7	" " "			
26	ST #6	27/27	—	" " "			
28	SS #8	2.0	1-1 1-2	" " "			
30	ST #7	27/27	—	" " "			
	SS #9	2.0	7 11 15-21	0-1.4 = Silty, clayey sand / sandy silt Rest = weathered sandstone bedrock w/ t sh & med	Sheen not noticed at 1st trip. Sheen noticed 2nd time		
			6-12 23 35	End of boring = 32'	Below counts are higher below the first.		

HART

FRED C. HART ASSOCIATES, INC.

TEST BORING LOG

BORING/WELL LOCATION SKETCH MAP

N

BORING NO. TB 3

PROJECT NO., NAME: CMCSCC 85001-17 Geotechnical Investigation

LOCATION: Millington Site

DRILLING CONTRACTOR, DRILLER: Heller Drilling

HART GEOLOGIST, OFFICE: Steve Hamilton / Liberty Corner

DRILLING EQUIPMENT, METHOD: Skid rig

SIZE, TYPE OF BIT:

SAMPLING METHOD: 5" split spoon / shelby

START, FINISH DATE: 11-5-87 - 11-5-87

WELL INSTALLED? YES ☐ NO ☒

CASING MAT./DIA.:

SCREEN: TYPE | MAT. | LENGTH | DIA. | SLOT SIZE

ELEVATION OF: (FT. ABOVE M.S.L.) GROUND SURFACE | TOP OF WELL CASING | TOP & BOTTOM SCREEN | GW SURFACE | DATE

REMARKS:

DEPTH (FT)	SAMPLE NO. AND TYPE	RECOVERY (FT)	PENETRATION RESISTANCE BLOWS/FT	LOG OF TEST BORING: DESCRIPTION	REMARKS	WELL CONST.	GRAPHIC LITHO LOG
	SS #1	0.4	1-3 1-1	reddish-brown silty, sandy topsoil fill			
	ST #1	23"/24"	—	asbestos fiber fill			
5	SS #2	0.7'	1/12" 1/12"	" " "			5
	ST #2	24"/24"	—	" " "			
	SS #3	0.0	1/12" 1/12"	" " "			
10	ST #3	23/24"	—	" " "			10
	SS #4	1.4	1-1 1-2	" " "			
15	ST #4	20/24"	—	" " "			15
	SS #5	2.0	1-2 2-2	" "			
	ST #5	22.5/24"	—	"			

Proportions Used: Trace = 0-10%, Little = 10-20%, Some = 20-35%, And = 35-50%

Sampling Abbreviations: SS = Split Spoon, ST = Shelby Tube, CSC = Continuous Soil Core

ASB 002 1051

FRED C. HART ASSOCIATES, INC.

BORING NO. TB 3

LOG OF TEST BORING

DEPTH (FT)	SAMPLE NO. AND TYPE	RECOVERY (FT)	PENETRATION RESISTANCE BLOWS/FT	DESCRIPTION	REMARKS	WELL CONST.	GRAPHIC LITHO LOG
	SS #6	2.0	3-4 6-R	Asbestos fill deposit			
	ST #6	24.5/24.5	—	" " "			
	SS #7	2.0		" " "			
	ST #7	18/24	—	" " "			
	SS #8	2.0		0-0.17' = Same as above Rest = silty, clayey-sand + sandstone chips			
	SS #9	2.0	—	silty, clayey-sand with sandstone chips			
	ST #9	12/12"	—	same as above			
				End of boring = 34'			

HART

FRED C. HART ASSOCIATES, INC.

TEST BORING LOG

BORING/WELL LOCATION SKETCH MAP

N

BORING NO. TB 4

PROJECT NO. NAME: Geotechnical Investigation

LOCATION: TEA Bldg - Millington, NJ

DRILLING CONTRACTOR, DRILLER: Heller Drilling

HART GEOLOGIST, OFFICE: Steve Hornbeck / Liberty Corner

DRILLING EQUIPMENT, METHOD: Skid-mounted Rig

SIZE, TYPE OF BIT:

SAMPLING METHOD: SS + Shelby tube

START, FINISH DATE: 11-2-92 - 11-4-92

WELL INSTALLED? YES ☐ NO ☒

CASING MAT./DIA.:

SCREEN: TYPE / MAT. / LENGTH / DIA. / SLOT SIZE

ELEVATION OF: (FT. ABOVE M.S.L.) GROUND SURFACE / TOP OF WELL CASING / TOP & BOTTOM SCREEN / GW SURFACE / DATE

REMARKS: All Shelby tubes were filled in 2'. Blow counts were recorded for 6"

DEPTH (FT)	SAMPLE NO. AND TYPE	RECOVERY (FT)	PENETRATION RESISTANCE BLOWS/FT	LOG OF TEST BORING: DESCRIPTION	REMARKS	WELL CONST.	GRAPHIC LITHO LOG
	SS #1	0.7	1-1 1/12"	0-0.35' = brown, silty-clayey topsoil fill. Rest = white asbestos fiber waste fill	There are also pink, green + red fibers present in small amounts		
	ST #1	22.5"/24"	—	Asbestos fiber fill			
5	SS #2	2.0	1/12" 1/12"	" " "			5
	ST #2	22"/24"	—	" " "			
	SS #3	2.0	1/12" 1/12"	" " "			
10	ST #3	23.5"/24"	—	" "			10
	SS #4	2.0	1-1 2-4	" " "			
15	ST #4	12"/24"	—				15
	SS #5	2.0	1/12" 1/12"				
	ST #5	12"/24"	—				

Proportions Used: Trace = 0-10%, Little = 10-20%, Some = 20-35%, And = 35-50%

Sampling Abbreviations: SS = Split Spoon, ST = Shelby Tube, CSC = Continuous Soil Core

ASB 002 1053

FRED C. HART ASSOCIATES, INC.

BORING NO. TB 4

LOG OF TEST BORING

DEPTH (FT)	SAMPLE NO. AND TYPE	RECOVERY (FT)	PENETRATION RESISTANCE BLOWS/FT	DESCRIPTION	REMARKS	WELL CONST.	GRAPHIC LITHO LOG
	SS #6	2.0	1-1 2-3	Asbestos fiber fill			
	ST #6	24"/24"	—	" " "			
	SS #7	2.0	5-6 9-11	" " "			
	ST #7	25"/25"	—	" " "			
	SS #8	2.0	3-4 6-5	0-0.5' = same as above Rest = reddish brown silty, clayey silt with bedrock chips			
				End of Test Boring = 30'			

ASB 002 1054

ENGINEER A. Briggs
DATE ASSIGNED 11-19-87
DATE DUE ASAP

JOB No. 87C212-01
JOB NAME Hart Engineers, Inc.
National Gypsum
Millington Site

DATE REC. 11-20-87
DATE CMP. 11-22-87
REC. BY RAL
Page No 1 of 3

SUMMARY OF LABORATORY TEST RESULTS

BORING and SAMPLE No	DEPTH (feet)	CLASSIFICATION	PERM k cm/sec	NATURAL WATER CONTENT (%)	ATTERBERG LIMITS		UNCON. COMPRESS		UNIT DRY WGT (pcf)	SPECIFIC GRAVITY	GRAIN SIZE		OPT MOIST	CONSOLID	TRIAXIAL			
					LIQUID LIMIT	PLASTIC LIMIT	STRESS (tsf)	STRAIN (%)			SIEVE	HYDR.			UU	$\overline{CIU}$	CELL PRESSURE (psi)	BACK PRESSURE (psi)
TB-1 SS-1	0-2	ASBESTOS		37.5														
SS-2	4-6	ASBESTOS		236.8														
SS-3	8-10	ASBESTOS		211.0														
SS-4	12-14	ASBESTOS		386.1														
SS-5	16-18	ASBESTOS		200.3														
SS-6	20-22	ASBESTOS		292.5														
SS-7	24-26	ASBESTOS		244.9														
SS-8	28-30	ASBESTOS		85.3														
TB-2 SS-1	0-2	ASBESTOS		131.9														
SS-2	4-6	ASBESTOS		460.7														
SS-3	8-10	ASBESTOS		308.1														
SS-4	12-14	ASBESTOS		279.0														
SS-5	16-18	ASBESTOS		221.8														
SS-				180.1														

ASB 002 1055

ENGINEER A. Briggs
DATE ASSIGNED 11-19-87
DATE DUE ASAP

JOB No. 87C212-01
JOB NAME Hart Engineers, Inc.
National Gypsum
Millington Site

DATE REC. 11-20-87
DATE CMP. 11-22-87
REC. BY RAL
Page No. 2 of 3

SUMMARY OF LABORATORY TEST RESULTS

BORING and SAMPLE No	DEPTH (feet)	CLASSIFICATION	PERM k cm/sec	NATURAL WATER CONTENT (%)	ATTERBERG LIMITS		UNCON. COMPRESS		UNIT DRY WGT (pcf)	SPECIFIC GRAVITY	GRAIN SIZE		OPT MOIST	CONSOLID	TRIAXIAL			
					LIQUID LIMIT	PLASTIC LIMIT	STRESS (tsf)	STRAIN (%)			SIEVE	HYDR.			UU	$\overline{CIU}$	CELL PRESSURE (psi)	BACK PRESSURE (psi)
TB-2 SS-7	22-24	ASBESTOS		151.9														
SS-8	26-28	ASBESTOS		181.1														
TB-3 SS 2-1	0-2	ASBESTOS		16.6														
SS 2-2	4-6	ASBESTOS		411.2														
SS 2-3	8-10	ASBESTOS		354.7														
SS 2-4	12-14	ASBESTOS		347.5														
SS 2-5	16-18	ASBESTOS		357.3														
SS 2-6	20-22	ASBESTOS		284.8														
SS 2-7	24-26	ASBESTOS		333.8														
SS 2-8	28-30	ASBESTOS		135.2														
TB-4 SS-1	0-2	ASBESTOS		331.7														
SS-2	4-6	ASBESTOS		446.2														
SS-3				447.1														

ASB 002 1056

ENGINEER A. Briggs
DATE ASSIGNED 11-19-87
DATE DUE ASAP

JOB No. 87C212-01
JOB NAME Hart Engineers, Inc.
National Gypsum
Millington Site

DATE REC. 11-20-87
DATE CMP. 11-22-87
REC. BY RAL
Page No 3 of 3

SUMMARY OF LABORATORY TEST RESULTS

BORING and SAMPLE No	DEPTH feet	CLASSIFICATION	PERM k cm/sec	NATURAL WATER CONTENT (%)	ATTERBERG LIMITS		UNCON. COMPRESS		UNIT DRY WGT (pcf)	SPECIFIC GRAVITY	GRAIN SIZE		OPT MOIST	CONSOLID	TRIAXIAL			
					LIQUID LIMIT	PLASTIC LIMIT	STRESS (tsf)	STRAIN (%)			SIEVE	HYDR.			UU	$\overline{CIU}$	CELL PRESSURE (psi)	BACK PRESSURE (psi)
TB-4 SS-4	12-14	ASBESTOS		333.0														
SS-5	16-18	ASBESTOS		278.3														
SS-6	20-22	ASBESTOS		228.5														
SS-7	24-26	ASBESTOS		238.3														
SS-8	28-30	ASBESTOS		50.0														

ASB 002 1037

ENGINEER Mr. Al Briggs
DATE ASSIGNED 12/2/87
DATE DUE 12/14/87

JOB No. 87C212-02
JOB NAME Hart Engineers
National Gypsum
Millington Site

DATE REC. 11/20/87 (on hold until asgd.)
DATE CMP. rel. on 12/11/87
REC. BY RAL
Page No. 1 of 2

SUMMARY OF LABORATORY TEST RESULTS

BORING and SAMPLE No	DEPTH (feet)	CLASSIFICATION	TUBE LOG	PERM k cm/sec	NATURAL WATER CONTENT (%)	ATTERBERG LIMITS		UNCON. COMPRESS		UNIT DRY WGT (pcf)	SPECIFIC GRAVITY	GRAIN SIZE		OPT MOIST	CONSOLID	TRIAXIAL			
						LIQUID LIMIT	PLASTIC LIMIT	STRESS (tsf)	STRAIN (%)			SIEVE	HYDR.			UU	CIU	CELL PRESSURE (psi)	BACK PRESSURE (psi)
TB-1 ST-1	2-4	Asbestos	*		174.0					38.2									
TB-1 ST-2	6-8	Asbestos	*		294.6					17.9									
TB-1 ST-3	10-12	Asbestos	*		243.4					17.7									
TB-1 ST-4	14-16	Asbestos	*		160.5					24.1						*			
TB-1 ST-5	18-20	Asbestos	*		144.8					26.5									
TB-1 ST-6	22-24	Asbestos	*		118.8					32.2						*			
TB-1 ST-7	26-28	Asbestos	*		243.5					20.8									
TB-2 ST-1	2-4	Asbestos	*		438.4					10.0									
TB-2 ST-2	6-8	Asbestos	*		260.8					14.9									
TB-2 ST-3	10-12	Asbestos	*		207.8					20.2									
TB-2 ST-4	14-16	Asbestos	*		285.7					15.7									
TB-2 ST-5	20-22	Asbestos	*		268.6					19.6							*		
TB-2 ST-6	24-26	Asbestos								16.5						*	*		
TB-2 ST-7	28-30	Asbestos			140.2					27.3									

ASB 002 1058

ENGINEER Mr. Al Briggs
DATE ASSIGNED 12/2/87
DATE DUE 12/14/87

JOB No. 87C212-02
JOB NAME Hart Engineers
National Gypsum
Millington Site

DATE REC. 11/20/87 (on hold until asgd.)
DATE CMP. rel. on 12/11/87
REC. BY RAL
Page No 2 of 2

SUMMARY OF LABORATORY TEST RESULTS

BORING and SAMPLE No	DEPTH (feet)	CLASSIFICATION	TUBE LOG	PERM k cm/sec	NATURAL WATER CONTENT (%)	ATTERBERG LIMITS LIQUID LIMIT	ATTERBERG LIMITS PLASTIC LIMIT	UNCON COMPRESS STRESS (tsf)	UNCON COMPRESS STRAIN (%)	UNIT DRY WGT (pcf)	SPECIFIC GRAVITY	GRAIN SIZE SIEVE	GRAIN SIZE HYDR.	OPT MOIST	CONSOLID	TRIAXIAL UU	TRIAXIAL $\overline{CIU}$	TRIAXIAL CELL PRESSURE (psi)	TRIAXIAL BACK PRESSURE (psi)
TB-3 ST-1	2-4	Asbestos	*		137.2					23.2									
TB-3 ST-2	6-8	Asbestos	*		375.4					12.1						*			
TB-3 ST-3	10-12	Asbestos	*		160.7					19.9									
TB-3 ST-4	14-16	Asbestos	*		157.7					23.9									
TB-3 ST-5	18-20	Asbestos	*		160.4					25.7									
TB-3 ST-6	22-24	Asbestos	*		62.6					36.3						*			
TB-3 ST-7	26-28	Asbestos	*		172.2					25.7									
TB-4 ST-1	2-4	Asbestos	*		507.5					10.5									
TB-4 ST-2	6-8	Asbestos	*		286.3					17.4							*		
TB-4 ST-3	10-12	Asbestos	*		378.2					13.3									
TB-4 ST-4	14-16	Asbestos	*		300.0					16.4									
TB-4 ST-5	18-20	Asbestos	*		228.2					22.4									
TB-4 ST-6	22-24	Asbestos	*		182.4					16.9						*			
TB-4 ST-7	26-28	Asbestos	*		100.0					37.0									

* See Test Curves or Logs √ TEST COMP and CHECKED ● TEST IN PROGRESS

ASB 002 1059

TUBE LOG RECORD

PROJECT: HART ENGINEERS JOB No. 87C 212-02

PROJECT LOCATION: NATIONAL GYPSUM BORING: TB-1 SAMPLE: ST-1

DESCRIPTION: ASBESTOS DEPTH:

TESTED BY: DB DATE: 12-8-87

COMMENT:

DEPTH	SA No.	Description	M/C %	Dry Density pcf
36	inches			
34				
32				
30				
28				
26				
24				
22				
20				
18				
16				
14				
12				
10		Asbestos		
8				
6		①	174.0	38.2
4				
2				
0				

	1	2	3	4	5
Test No.					
Tube + Soil gms	1015.8				
Tube gms	135.6				
Soil gms	590.2				
Dia (in.)	2.852				
Height (in.)	3.357				
Volume (ft.^{3})					
Tare No.	M-219				
Tare + Soil Wet	222.7				
Tare + Soil Dry	86.1				
Tare Wt	1.6				
Dry Soil	74.5				
Water	136.5				

ASB 002 1060

TUBE LOG RECORD

PROJECT: Hart Engineer JOB No. 87C212-02

PROJECT LOCATION: National Gypsum BORING: TB-1 SAMPLE: ST-4

DESCRIPTION: Asbestos DEPTH:

TESTED BY: DB DATE: 12-8-87

COMMENT:

DEPTH	SA No.	Description	M/C %	Dry Density pcf
36				
34				
32				
30				
28				
26				
24				
22				
20				
18				
16				
14				
12				
10		Asbestos		
8	1		160.5	24.1
6				
4				
2				
0				

Test No.	1	2	3	4	5
Tube + Soil gms	612.8				
Tube gms	268.4				
Soil gms	344.4				
Dia (in.)	2.852				
Height (in.)	3.272				
Volume (in.^{3})					
Tare No.	M-613				
Tare + Soil Wet	114.5				
Tare + Soil Dry	81.5				
Tare Wt	8.0				
Dry Soil	73.5				
Water	118.0				
Moisture, %	160.5 %				

ASB 002 1061

TUBE LOG RECORD

PROJECT: Hart Engineers JOB No. 87C212-02

PROJECT LOCATION: National Gypsum BORING: TB-1 SAMPLE: ST-3

DESCRIPTION: ASBESTOS DEPTH:

TESTED BY: DB DATE: 12-8-87

COMMENT:

DEPTH	SA No.	Description	M/C %	Dry Density pcf
36	inches			
34				
32				
30				
28				
26				
TOP OF TUBE 24				
22				
20				
18				
16				
14				
12				
10	END OF TUBE SAMPLE			
8		Asbestos		
6				
5				
4	R		248.4	17.7
2				
0				

Test No.	1	2	3	4	5
Tube + Soil gms	861.7				
Tube gms	385.0				
Soil gms	484.7				
Dia (in.)	2.450				
Height (in.)	4.253				
Volume (in.^{3})	•				
Tare No.	M-619				
Tare + Soil Wet	[illegible]				
Tare + Soil Dry	886				
Tare Wt	8.1				
Dry Soil	80.5				
Water	19.5.9				
Moisture, %	243.3				

ASB 002 1062

TUBE LOG RECORD

PROJECT: Hard Engineer JOB No. 87C[illegible]-02

PROJECT LOCATION: National Gypsum BORING: TB-1 SAMPLE: ST-5

DESCRIPTION: Asbestos DEPTH:

TESTED BY: DB DATE: 12-8-87

COMMENT:

DEPTH	SA No.	Description	M/C %	Dry Density pcf
36	inches			
34				
32				
30				
28				
26				
24				
22				
20				
18				
16				
14				
12				
10		Asbestos		
8		①	14.8	26.5
6				
4				
2				
0				

Test No.	1	2	3	4	5
Tube + Soil gms	1115.3				
Tube gms	495.9				
Soil gms	652.4				
Dia (in.)	2.872				
Height (in.)	5.987				
Volume (ft.³)					
Tare No.	M-117				
Tare + Soil Wet	[illegible]				
Tare + Soil Dry	102.5				
Tare Wt	8.9				
Dry Soil	18.6				
Water	142.8				
Moisture, %	141.8 %				

ASB 002 1063

TUBE LOG RECORD

PROJECT: Hart Engineer JOB No. 87C212-02

PROJECT LOCATION: National Gypsum BORING: TB-1 SAMPLE: ST-6

DESCRIPTION: ASBestos DEPTH:

TESTED BY: DB DATE: 12-8-87

COMMENT:

DEPTH	SA No.	Description	M/C %	Dry Density pcf
36	inches			
34				
32				
30				
28				
26				
24				
22				
20				
18				
16				
14				
12				
10		Asbestos		
8			118.8	32.2
6				
4				
2				
0				

Test No.	1	2	3	4	5
Tube + Soil gms	985.0				
Tube gms	364.9				
Soil gms	560.1				
Dia (in.)	2.451				
Height (in.)	4.729				
Volume (ft.^{3})					
Tare No.	M-5011				
Tare + Soil Wet	116.5				
Tare + Soil Dry	172.5				
Tare Wt	8.4				
Dry Soil	164.1				
Water	195.0				
Moisture, %	118.8 %				

ASB 002 1064

TUBE LOG RECORD

PROJECT: Hart Engineer JOB No. 97C212-02

PROJECT LOCATION: National Gypsum BORING: TB-1 SAMPLE: ST-7

DESCRIPTION: Asbestos DEPTH:

TESTED BY: DB DATE: 12-8-87

COMMENT:

DEPTH	SA No.	Description	M/C %	Dry Density pcf
36	inches			
34				
32				
30				
28				
26				
24				
22				
20				
18				
16				
14				
12				
10		Asbestos		
8			24.35	20.0
6				
4				
2				
0				

Top of tube

Fill

Base

Test No.	1	2	3	4	5
Tube + Soil gms	718.2				
Tube gms	276.6				
Soil gms	441.6				
Dia (in.)	2.851				
Height (in.)	3.691				
Volume (ft.^{3})					
Tare No.	M-3.11				
Tare + Soil Wet	305.7				
Tare + Soil Dry	294.6				
Tare Wt	71.9				
Dry Soil	86.7				
Water	211.1				
Moisture, %	243.5 %				

ASB 002 1065

TUBE LOG RECORD

4

PROJECT: [illegible] Engineer JOB No. 87C212-02

PROJECT LOCATION: National Gypsum BORING: TB-2 SAMPLE: ST-1

DESCRIPTION: ASBESTOS DEPTH:

TESTED BY: DB DATE: 12-9-87

COMMENT: Some stiff lenses

DEPTH	SA No.	Description	M/C %	Dry Density pcf
36 inches				
34				
32				
30				
28				
26				
24				
22				
20				
18				
16				
14				
12				
10		Asbestos		
8	1		438.4	10.0
6				
4				
2				
0				

Test No.	1	2	3	4	5
Tube + Soil gms	655.7				
Tube gms	311.1				
Soil gms	344.6				
Dia (in.)	2.8				
Height (in.)	3.8/3				
Volume (ft.^{3})					
Tare No.	M-609				
Tare + Soil Wet	184.2				
Tare + Soil Dry	41.2				
Tare Wt	7.9				
Dry Soil	33.3				
Water	146.0				
Moisture, %	438.4 %				

ASB 002 1066

TUBE LOG RECORD

PROJECT: Hart Engineer JOB No. 87C212-02

PROJECT LOCATION: National Gypsum BORING: TB-2 SAMPLE: ST-2

DESCRIPTION: Asbestos DEPTH:

TESTED BY: DB DATE: 12-9-87

COMMENT: Some drier layer

DEPTH	SA No.	Description	M/C %	Dry Density pcf
36	inches			
34				
32				
30				
28				
26				
Top of Tube 24				
22				
20				
18				
16				
14				
12				
10				
8		Asbestos		
6	1		26.8	14.9
4				
2				
0				

Test No.	1	2	3	4	5
Tube + Soil gms	1,031.0				
Tube gms	497.0				
Soil gms	542.0				
Dia (in.)	2.861				
Height (in.)	5.983				
Volume (in.^{3})					
Tare No.	M-608				
Tare + Soil Wet	1,011.1				
Tare + Soil Dry	962.2				
Tare Wt	7.8				
Dry Soil	954.4				
Water	111.9				
Moisture, %	26.0.8 %				

ASB 002 1067

TUBE LOG RECORD

PROJECT: Hart Engineering JOB No. 87C212-02

PROJECT LOCATION: National Gypsum BORING: TB-2 SAMPLE: ST-3

DESCRIPTION: ASBESTOS DEPTH:

TESTED BY: DB DATE: 12-9-87

COMMENT:

DEPTH	SA No.	Description	M/C %	Dry Density pcf
36	inches			
34				
32				
30				
28				
26				
24				
22				
20				
18				
16				
14				
12				
10		Asbestos		
8				
6	1		207.8	20.2
4				
2				
0				

Top of tube

Test No.	1	2	3	4	5
Tube + Soil gms	633.6				
Tube gms	280.0				
Soil gms	353.6				
Dia (in.)	2.451				
Height (in.)	3.345				
Volume (ft.^{3})					
Tare No.	M-92				
Tare + Soil Wet	313.8				
Tare + Soil Dry	94.8				
Tare Wt	7.9				
Dry Soil	86.9				
Water	179.5				
Moisture, %	206.8 %				

ASB 002 1068

TUBE LOG RECORD

PROJECT: Hart Engineer JOB No. 87C212-02

PROJECT LOCATION: National Gypsum BORING: TB-2 SAMPLE: ST-4

DESCRIPTION: Asbestos DEPTH:

TESTED BY: DB DATE: 12-9-87

COMMENT:

DEPTH	SA No.	Description	M/C %	Dry Density pcf
36	inches			
34				
32				
30				
28				
26				
24				
22				
20				
18				
16				
14				
12				
10		Asbestos		
8				
6	1		285.7	15.7
4				
2				
0				

Top of tube

Bot of tube

Test No.	1	2	3	4	5
Tube + Soil gms	804.0				
Tube gms	361.0				
Soil gms	443.0				
Dia (in.)	2.453				
Height (in.)	4.358				
Volume (in.^{3})					
Tare No.	H-90				
Tare + Soil Wet	353.5				
Tare + Soil Dry	98.7				
Tare Wt	9.5				
Dry Soil	89.2				
Water	254.8				
Moisture, %	285.7 %				

ASB 002 1069

TUBE LOG RECORD

PROJECT: Hart Engineer JOB No. 87C212-02

PROJECT LOCATION: National Gypsum BORING: TB-2 SAMPLE: ST-5

DESCRIPTION: ASBestos DEPTH:

TESTED BY: DB DATE: 12-9-87

COMMENT:

DEPTH	SA No.	Description	M/C %	Dry Density pcf
36	inches			
34				
32				
30				
28				
26				
24				
22				
20				
18				
16				
14				
12	END	OF SAMPLE		
10				
8				
6		Asbestos		
4		T		
2				
0				

A

PIC

30 EFFEC

30 EFFEC

PT 1

A

Test No.	1	2	3	4	5
Tube + Soil gms	768.6				
Tube Measure gms	34.0				
Soil gms	730.6				
Dia (in.)	3.8942				
Height (in.)	6.069				
Volume (ft.^{3})					
Tare No.	M-614				
Tare + Soil Wet	89.1				
Tare + Soil Dry	30.0				
Tare Wt	9.0				
Dry Soil	22.0				
Water	59.1				
Moisture, %	268.6 %				

ASB 002 1070

TUBE LOG RECORD

PROJECT: Hart Engineer JOB No. 87C 212-02

PROJECT LOCATION: National Gypsom BORING: TB-2 SAMPLE: ST-6

DESCRIPTION: Asbestos DEPTH:

TESTED BY: DB DATE: 12-9-87

COMMENT: Fibrous

DEPTH	SA No.	Description	M/C %	Dry Density pcf
36	inches			
34				
32				
30				
28				
26				
24				
22				
20				
18				
16				
14				
12				
10		Asbestos		
8				
6				
4	①		3.6d.	16.5
2				
0				

Test No.		1	2	3	4	5
Tube + Soil	gms	1117.8				
Tube	gms	277.9				
Soil	gms	839.9				
Dia (in.)		2.855				
Height (in.)		3.411				
Volume ($in.^3$)						
Tare No.		A-624				
Tare + Soil Wet		344.3				
Tare + Soil Dry		55.7				
Tare Wt		8.3				
Dry Soil		47.4				
Water		172.6				
Moisture, %		364.1 %				

ASB 002 1071

TUBE LOG RECORD

PROJECT: Hart Engineer JOB No. 87C212-02

PROJECT LOCATION: National Gypson BORING: TB-2 SAMPLE: ST-7

DESCRIPTION: ASBestos DEPTH:

TESTED BY: DB DATE: 12-9-87

COMMENT:

DEPTH	SA No.	Description	M/C %	Dry Density pcf
36	inches			
34				
32				
30				
28				
26				
24				
22				
20				
18				
16				
14				
12				
10		Asbestos		
8				
6	1		142.2	27.3
4				
2				
0				

top sample

Test No.	1	2	3	4	5
Tube + Soil gms	686.4				
Tube gms	294.6				
Soil gms	391.8				
Dia (in.)	2.852				
Height (in.)	3.557				
Volume (in.^{3})					
Tare No.	M-615				
Tare + Soil Wet	311.3				
Tare + Soil Dry	147.2				
Tare Wt	8.0				
Dry Soil	139.2				
Water	195.1				
Moisture, %	140.2 %				

ASB 002 1072

TUBE LOG RECORD

PROJECT: Hart Engineers JOB No. 37C-12-02

PROJECT LOCATION: National Gypsum BORING: TB-3 SAMPLE: ST-1

DESCRIPTION: Asbestos DEPTH:

TESTED BY: DB DATE: 12-9-87

COMMENT:

DEPTH	SA No.	Description	M/C %	Dry Density pcf
36	inches			
34				
32				
30				
28				
26				
Top of tube 24				
22				
20				
18				
16				
14				
end of sample 12				
10		Asbestos		
8			132.6	23.2
6	1			
4				
2				
0				
end of tube (102)				

Test No.	1	2	3	4	5
Tube + Soil gms	790.5				
Tube gms	372.2				
Soil gms	418.3				
Dia (in.)	2.875				
Height (in.)	4.554				
Volume (in.^{3})					
Tare No.	M-110				
Tare + Soil Wet	262.6				
Tare + Soil Dry	115.1				
Tare Wt	11.8				
Dry Soil	107.3				
Water	147.5				
Moisture, %	137.4 %				

1073 002 ASB

TUBE LOG RECORD

PROJECT: Hart Engineers JOB No. 87C212-02

PROJECT LOCATION: National Gypsum BORING: TB-3 SAMPLE: ST-2

DESCRIPTION: Asbestos DEPTH:

TESTED BY: DB DATE: 12-9-87

COMMENT:

DEPTH	SA No.	Description	M/C %	Dry Density pcf
36	inches			
34				
32				
30				
28				
26				
Top of Tube 24				
22				
20				
18				
16				
end of sample 14				
12				
10				
8		Asbestos		
6	D		375.4	12.1
4				
2				
0				
End of tube inside				

Test No.	1	2	3	4	5
Tube + Soil gms	766.5				
Tube gms	353.7				
Soil gms	412.8				
Dia (in.)	2.871				
Height (in.)	4.262				
Volume (ft.^{3})					
Tare No.	17-52				
Tare + Soil Wet	101.4				
Tare + Soil Dry	28.2				
Tare Wt	8.7				
Dry Soil	19.5				
Water	73.2				
Moisture, %	375.4 %				

ASB 002 1074

TUBE LOG RECORD

PROJECT: Hart Engineers JOB No. 87C212-02

PROJECT LOCATION: National Gypsum BORING: TB-3 SAMPLE: ST-3

DESCRIPTION: ASBESTOS DEPTH:

TESTED BY: DB DATE: 12-9-87

COMMENT:

DEPTH	SA No.	Description	M/C %	Dry Density pcf
36	inches			
34				
32				
30				
28				
26				
24				
22				
20				
18				
16				
14				
12				
10				
8		Asbestos		
6	1		160.7	19.9
4				
2				
0				

Test No.	1	2	3	4	5
Tube + Soil gms	583.0				
Tube gms	245.0				
Soil gms	338.0				
Dia (in.)	2.452				
Height (in.)	3.129				
Volume (in.^{3})					
Tare No.	11				
Tare + Soil Wet	194.8				
Tare + Soil Dry	71.4				
Tare Wt	11.6				
Dry Soil	111.8				
Water	115.4				
Moisture, %	160.7 %				

ASB 002 1075

TUBE LOG RECORD

PROJECT: HART ENGINEERS JOB No. 87C 212-02

PROJECT LOCATION: National GYPSUM BORING: TB-3 SAMPLE: ST-4

DESCRIPTION: Asbestos DEPTH:

TESTED BY: DB DATE: 12-9-87

COMMENT:

DEPTH	SA No.	Description	M/C %	Dry Density pcf
36				
34				
32				
30				
28				
26				
24				
22				
20				
18				
16				
14				
12				
10		Asbestos		
8	1		157.7	23.9
6				
4				
2				
0				

inches

Topsoil Tok

Top of Asphalt

Test No.	1	2	3	4	5
Tube + Soil gms	1062.3				
Tube gms	477.3				
Soil gms	584.0				
Dia (in.)	2.151				
Height (in.)	5.717				
Volume (in.^{3})					
Tare No.	A1 103				
Tare + Soil Wet	2115.3				
Tare + Soil Dry	100.5				
Tare Wt	5.1				
Dry Soil	94.8				
Water	144.8				
Moisture, %	152.7 %				

1076 002 ASB

TUBE LOG RECORD

PROJECT: HART Engineers JOB No. 87C212-02

PROJECT LOCATION: National GYPSUM BORING: TB-3 SAMPLE: ST-5

DESCRIPTION: Asbestos DEPTH:

TESTED BY: DB DATE: 12-9-87

COMMENT:

DEPTH	SA No.	Description	M/C %	Dry Density pcf
36	inches			
34				
32				
30				
28				
26 (Top of tube)				
24				
22				
20				
18				
16				
14 (1st sample)				
12				
10		Asbestos		
8				
6	(1)		160.4	25.7
4				
2				
0 (bottom of tube)				

Test No.	1	2	3	4	5
Tube + Soil gms	885.5				
Tube gms	376.4				
Soil gms	509.1				
Dia (in.)	2.852				
Height (in.)	4.528				
Volume (ft.^{3})					
Tare No.	11-101				
Tare + Soil Wet	148.1				
Tare + Soil Dry	62.3				
Tare Wt	8.8				
Dry Soil	53.5				
Water	85.8				
Moisture, %	160.4				

ASB 002 1077

TUBE LOG RECORD

PROJECT: Hart Engineers JOB No. 87C212-02

PROJECT LOCATION: National Gypsum BORING: TB-3 SAMPLE: ST-6

DESCRIPTION: Asbestos DEPTH:

TESTED BY: DB DATE: 12-9-87

COMMENT:

DEPTH	SA No.	Description	M/C %	Dry Density pcf
36	inches			
34				
32				
30				
28				
26				
24				
22				
20				
18				
16				
14				
12				
10				
8		Asbestos		
6	1		63.6	56.3
4				
2				
0				

Top of tube

End of tube

Bottom of tube

Test No.	1	2	3	4	5
Tube + Soil gms	922.2				
Tube gms	423.6				
Soil gms	503.6				
Dia (in.)	2.850				
Height (in.)	5.093				
Volume (ft.^{3})					
Tare No.	A-110				
Tare + Soil Wet	256.0				
Tare + Soil Dry	160.8				
Tare Wt	8.8				
Dry Soil	152.0				
Water	95.2				
Moisture, %	62.6 %				

ASB 002 1078

TUBE LOG RECORD

PROJECT: Hart Engineering JOB No. 87C212-22

PROJECT LOCATION: National Gypsum BORING: TB-3 SAMPLE: ST-7

DESCRIPTION: Asbestos DEPTH:

TESTED BY: DB DATE: 12-9-87

COMMENT:

DEPTH	SA No.	Description	M/C %	Dry Density pcf
36	inches			
34				
32				
30				
28				
26				
24				
22				
20				
18				
16				
14				
12				
10		Asbestos		
8	1		10.9	25.7
6				
4				
2				
0				

Test No.	1	2	3	4	5
Tube + Soil gms	887.0				
Tube gms	368.0				
Soil gms	519.0				
Dia (in.)	2.852				
Height (in.)	4.422				
Volume (in.^{3})					
Tare No.	4-102				
Tare + Soil Wet	115.9				
Tare + Soil Dry	77.4				
Tare Wt	8.4				
Dry Soil	68.8				
Water	118.5				
Moisture, %	172.2 %				

ASB 002 1079

TUBE LOG RECORD

PROJECT: Hart Engineers JOB No. 2)C 212-02

PROJECT LOCATION: National Gypsum BORING: TB-4 SAMPLE: ST-1

DESCRIPTION: ASBESTOS DEPTH:

TESTED BY: DB DATE: 12-11-87

COMMENT:

DEPTH	SA No.	Description	M/C %	Dry Density pcf
36 (inches)				
34				
32				
30				
28				
26				
24 (Top of tube)				
22				
20				
18				
16				
14				
12				
10		Asbestos		
8				
6	1		57.5	105
4				
2				
0 (Bottom of tube)				

Test No.	1	2	3	4	5
Tube + Soil gms	1,215.2				
Tube gms	486.6				
Soil gms	728.6				
Dia (in.)	2.451				
Height (in.)	6.910				
Volume (in.³)					
Tare No.	M-201				
Tare + Soil Wet	300.1				
Tare + Soil Dry	56.0				
Tare Wt	7.9				
Dry Soil	48.1				
Water	244.1				
Moisture, %	507.4 %				

ASB 002 1080

TUBE LOG RECORD

PROJECT: Hart Engineers JOB No. 87C212-02

PROJECT LOCATION: National Gypsum BORING: TB-4 SAMPLE: ST-2

DESCRIPTION: ASBESTOS DEPTH:

TESTED BY: DB DATE: 12-11-87

COMMENT:

DEPTH	SA No.	Description	M/C %	Dry Density pcf
36	inches			
34				
32				
30				
28				
26				
24		END OF TUBE SAMPLE		
22				
20	①	- Asbestos	286.3	7.4
18				
16				
14				
12				
10		Disturbed		
8				
6	⊗			
4				
2				
0	CUT END			

Test No.	1	2	3	4	5
Tube + Soil gms	-				
Tube gms	-				
Soil gms	642.8				
Dia (in.)	2.492				
Height (in.)	5.743				
Volume (in.^{3})	.				
Tare No.	M-605				
Tare + Soil Wet	101.0				
Tare + Soil Dry	32.0				
Tare Wt	7.9				
Dry Soil	24.1				
Water	69.0				
Moisture, %	286.31%				

1081 002 BSV

TUBE LOG RECORD

PROJECT: Hart Engineers JOB No. 87C212-02

PROJECT LOCATION: National Gypsum BORING: TB-4 SAMPLE: ST-3

DESCRIPTION: ASBESTOS DEPTH:

TESTED BY: DB DATE: 12-11-87

COMMENT:

DEPTH	SA No.	Description	M/C %	Dry Density pcf
36	inches			
34				
32				
30				
28				
26 (Top of Tube)				
24				
22				
20				
18		Some dry leaves		
16				
14				
12		Asbestos		
10				
8				
6	1		378.2	13.3
4				
2				
0 (Bottom of Tube)				

Test No.	1	2	3	4	5
Tube + Soil gms	845.2				
Tube gms	344.7				
Soil gms	500.5				
Dia (in.)	2.551				
Height (in.)	4.695				
Volume (ft.^{3})					
Tare No.	M-2				
Tare + Soil Wet	241.3				
Tare + Soil Dry	58.2				
Tare Wt	9.0				
Dry Soil	49.2				
Water	184.1				
Moisture, %	378.25				

ASB 002 1082

TUBE LOG RECORD

PROJECT: Hart Engineers JOB No. 87C212-02

PROJECT LOCATION: National GYPSOM BORING: TB-4 SAMPLE: ST-4

DESCRIPTION: ASBestos DEPTH:

TESTED BY: DB DATE: 12-11-87

COMMENT:

DEPTH	SA No.	Description	M/C %	Dry Density pcf
36	inches			
34				
32				
30				
28				
26				
Top of tube 24				
22				
20				
18		Some clayey layers		
16				
14				
12		Asbestos		
10				
8	(1)		300.0	16.1
6				
4				
2				
End of tube 0				

Test No.	1	2	3	4	5
Tube + Soil gms	1041.3				
Tube gms	411.2				
Soil gms	630.1				
Dia (in.)	2.850				
Height (in.)	5.721				
Volume (ft.^{3})	.				
Tare No.	M-620				
Tare + Soil Wet	255.4				
Tare + Soil Dry	70.0				
Tare Wt	8.2				
Dry Soil	61.8				
Water	185.4				
Moisture, %	300.0%				

1083 002 ASB

TUBE LOG RECORD

PROJECT: Hart Engineers JOB No. 87C212-02

PROJECT LOCATION: National Gypsum BORING: TB-4 SAMPLE: ST-5

DESCRIPTION: Asbestos DEPTH:

TESTED BY: DB DATE: 12-11-87

COMMENT:

DEPTH	SA No.	Description	M/C %	Dry Density pcf
36	inches			
34				
32				
30				
28				
26				
24				
22				
20		Very wet		
18				
16				
14				
12				
10				
8		Asbestos		
6	1		228.2	22.4
4				
2				

Top of tube

Bottom of tube

Test No.	1	2	3	4	5
Tube + Soil gms	630.5				
Tube gms	236.4				
Soil gms	394.1				
Dia (in.)	2.81				
Height (in.)	3.201				
Volume (in.^{3})					
Tare No.	M-128				
Tare + Soil Wet	226.8				
Tare + Soil Dry	74.6				
Tare Wt	7.9				
Dry Soil	66.7				
Water	152.2				
Moisture, %	228.2				

ASB 002 1084

TUBE LOG RECORD

PROJECT: Hart Engineers JOB No. 87C212-02

PROJECT LOCATION: National Gypsum BORING: TB-4 SAMPLE: ST-6

DESCRIPTION: Asbestos DEPTH:

TESTED BY: DB DATE: 12-11-87

COMMENT:

DEPTH	SA No.	Description	M/C %	Dry Density pcf
36	inches			
34				
32				
30				
28				
26				
Top of tube 24				
22				
20				
18		Some dry lenses		
16				
14				
12				
10		Asbestos		
8				
6	1		182.4	26.9
4				
2				
End of tube 1.5 ft				

Test No.	1	2	3	4	5
Tube + Soil gms	1,010.4				
Tube gms	374.7				
Soil gms	635.7				
Dia (in.)	4.989				
Height (in.)	2.889				
Volume (in.³)					
Tare No.	M-217				
Tare + Soil Wet	241.3				
Tare + Soil Dry	90.4				
Tare Wt	7.7				
Dry Soil	82.7				
Water	150.9				
Moisture, %	182.47%				

ASB 002 1085

TUBE LOG RECORD

PROJECT: Hart Engineers JOB No. 87C212-02

PROJECT LOCATION: National Gypsum BORING: TB-4 SAMPLE: ST-7

DESCRIPTION: Asbestos DEPTH:

TESTED BY: DB DATE: 12-11-87

COMMENT:

DEPTH	SA No.	Description	M/C %	Dry Density pcf
36 inches				
34				
32				
30				
28				
26 (Top of tube)				
24				
22				
20				
18		Some dry lenses		
16				
14				
12				
10		Asbestos		
8				
6	1		100.0	37.0
4				
2 (Bottom of tube)				

	1	2	3	4	5
Test No.					
Tube + Soil gms	1,048.6				
Tube gms	466.5				
Soil gms	582.1				
Dia (in.)	2.851				
Height (in.)	5.161				
Volume (ft.^{3})					
Tare No.	M-124				
Tare + Soil Wet	261.7				
Tare + Soil Dry	138.9				
Tare Wt	7.9				
Dry Soil	131.0				
Water	131.0				
Moisture, %	100.0 %				

1986 ASB 002

KEY			
CURVE NO.	BORING NO.	SAMPLE NO.	MOISTURE CONTENT, %
1	TB-1	ST-4	198.0
2	TB-2	ST-6	334.9
3	TB-3	ST-2	414.2
4	TB-3	ST-6	245.1
5	TB-4	ST-6	160.7
6	TB-6	ST-6	217.7

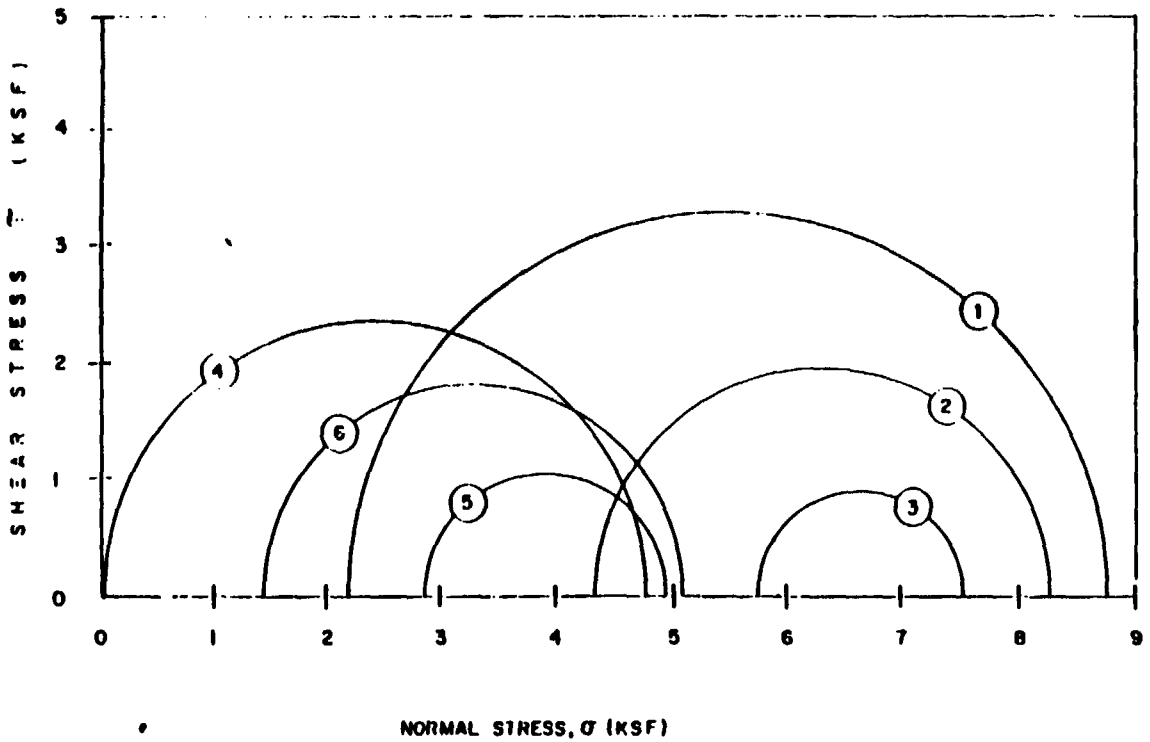

TEST RESULTS
UNCONSOLIDATED UNDRAINED
TRIAXIAL TESTS ON ASBESTOS

KEY

CURVE NO.	BORING NO.	SAMPLE NO.
①	TB-2	ST-5
②	TB-2	ST-6
③	TB-2	ST-6

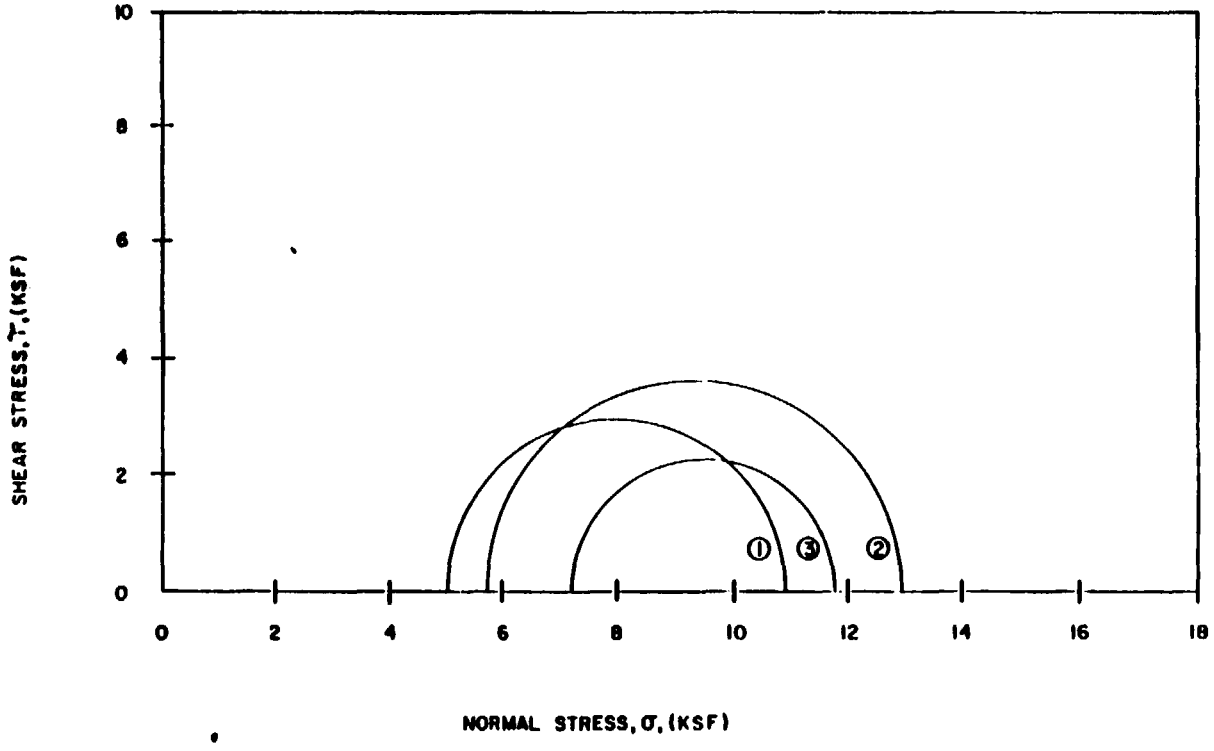

TEST RESULTS
CONSOLIDATED UNDRAINED
TRIAXIAL TESTS ON ASBESTOS

KEY		
CURVE NO.	BORING NO.	SAMPLE NO.
1	TB-4	ST-2
2	TB-4	ST-2
3	TB-4	ST-2

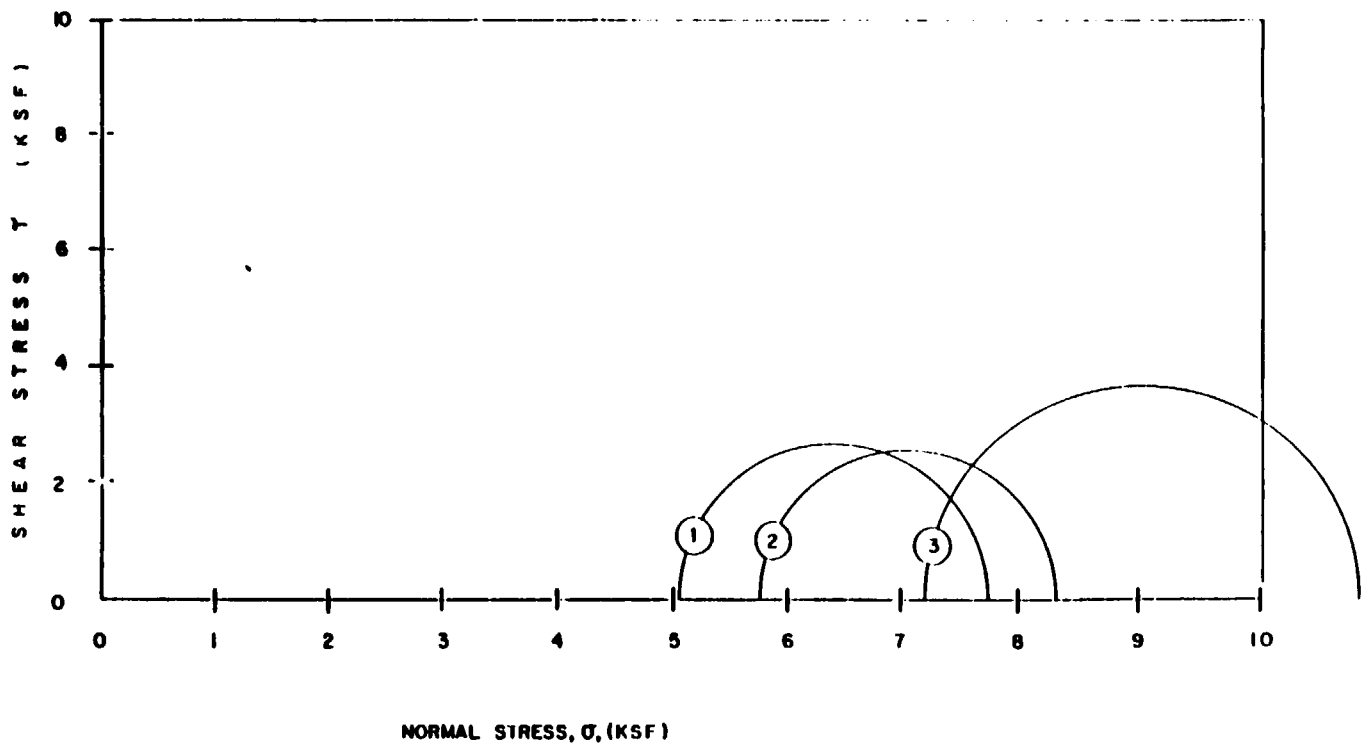

TEST RESULTS
CONSOLIDATED UNDRAINED
TRIAXIAL TESTS ON ASBESTOS

DAILY FIELD ACTIVITY LOG

HART

PROJECT NAME: National Gypsum Co. DATE: 12/1/87

PROJECT NO.: 01005-00-85001-51 PAGE 1 OF 4

PREPARED BY: RMertz

PROJECT DESCRIPTION: Millington site asbestos waste pile stability

WEATHER CONDITIONS: clear ~ 50°F

SITE CONDITIONS: soil surface moist

PERSONNEL ON SITE:

HART: RMertz (Pgh), Steve Hornbos (Liberty Corner NJ)

OTHER: none

EQUIPMENT IN USE:

HART: none

CONTRACTOR: NA

SPECIAL ORDERS / FIELD CHANGES:

ASB 002 1090

DAILY FIELD ACTIVITY LOG

HART

PROJECT NAME: National Gypsum Co. **DATE:** 12/1/87
PROJECT NO.: 01005-00-R5001-51 **PAGE** 2 **OF** 4
PREPARED BY: RMertz

ACTIVITIES:

- bank adjacent to edge of water lined with rock fill, riprap
- placed 4 unmarked stakes on bank surface slope staked top and bottom and sides; exposed asbestos very wet, portion of slough [illegible] [illegible]
- South end of slope to stake TL1: slope has [illegible], soil/[illegible] mix; ground cover med. to heavy vinyl/ivy/creeper; essentially no trees
- TL1 to TL2: birch? and [illegible]

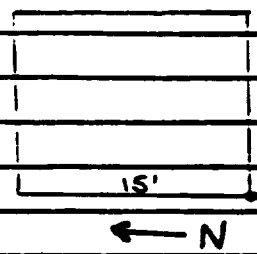

tree circumference (diameter)

4"(1.3)	7"(2.2)	1"(0.3)	1"(0.3)
8"(2.5)	6"(1.9)	1"(0.3)	3"(1.0)
3"(1.0)	1"(0.3)	1"(0.3)	13"(4.1)
3"(1.0)	1"(0.3)	1"(0.3)	5"(1.6)

Avg Dia = 1.2"

ground with no cover ~ 5% of surface; remainder covered with trees @ ~ density from above, ground cover light to medium ivy/creeper

- TL2 to TL3: no trees, med. to dense ivy/creeper ground cover
- TL3 to Northern limit: tree density, same as before
- TL4, TL5, TL6 delineator line: East of line area is flat, vegetation ~ [illegible] stand of grass no evidence of standing or [illegible] water; West of [illegible] trees to crest of slope [illegible] on [illegible], ⌀'s ~ 4.1", 1.6", 4.8" (typically 3.5" ⌀) trees bunched in [illegible] area is flat to gently sloping; ground cover poor stand of grass and "jackpots", uprooted tree ~ 2" ⌀ with roots ~ 18" dia (see photos)
- walked up steep slope around [illegible] ~ 5' from [illegible] ground [illegible] probably to dig to [illegible] [illegible] located West of Well 903

ASB 002 1091

DAILY FIELD ACTIVITY LOG

HART

PROJECT NAME: National Gypsum Co **DATE:** 12/1/87
PROJECT NO.: 01005-00-ES001-51 **PAGE** 3 **OF** 4
PREPARED BY: R Mertz

ACTIVITIES: Photo Log

Photo #	Description
6	surface slide, staked, looking East
7	" "
8	roots of upturned tree near Well 904 (W904 in background) looking SE
9	" " (clipboard for scale)
10-12	looking North @ Well 903
13-18	looking S and turning CW, @ Well 903
19-23	looking W and turning CW, near Well 903 on steep shor crest

ASB 002 1092

National Gypsum Co 12/1/87
01005-00-SS001-S1
RMertz

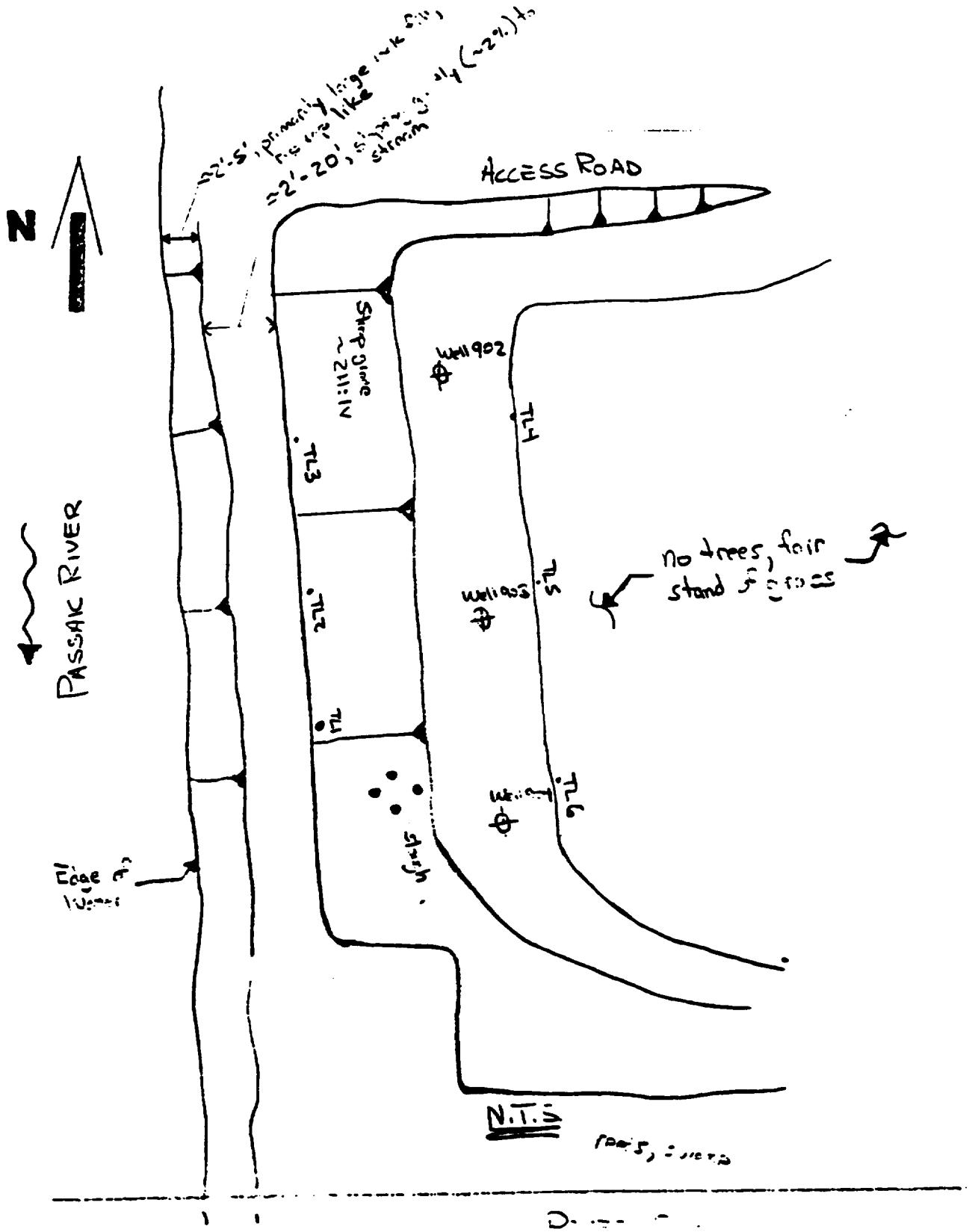

Building

ASB 002 1093

ASBESTOS MOUND SOIL ANALYSES

ASB 002 1094

THE STATE UNIVERSITY OF NEW JERSEY
RUTGERS
Campus at New Brunswick

SOIL TEST REPORT

Soil Testing Laboratory, Lipman Hall
New Jersey Agricultural Experiment Station

Place stamps for special tests here.

Soil Sample Questionnaire for Lawn, Shrub, Home Garden, or Nursery Plantings

ASBESTOS MOUND — Name
11-17-86 — Date
MILLINGTON SITE - MILLINGTON — Street or R.D. number
N.J. — City, State
zip code

Sample No. #1 Serial No. ~~115183~~

Do not write in this space. For laboratory use only.

SOIL TEST RESULTS

Soil texture 1

Serial No. 4481 Laboratory No.

pH	Magnesium	Phosphorus	Potassium	
80	317	<13	151	6895+

(IMPORTANT: WE WILL BE ABLE TO SUPPLY YOU WITH BETTER LIME AND FERTILIZER RECOMMENDATIONS IF YOU COMPLETE THE FOLLOWING SECTIONS.)

Plants to be grown

___ New lawn to be planted. * Established lawns hill

In area – ___ shady X partly shady ___ sunny

___ Flowers: Kind: ___

* New plantings to be made. ___ Established plantings.

___ Shrubs: Kind: ___

___ New plantings to be made. ___ Established plantings.

___ Vegetables: Kind: ___

___ New plantings to be made. ___ Established plantings.

___ Other: Kind: ___

Describe any specific problems you have had in this soil area:

Lime, fertilizer, and organic materials added in recent years

	When applied Month	Year	Kind	Amount	
___ Lime					
___ Fertilizer					lb./1,000 sq. ft.
___ Manure					lb./1,000 sq. ft.
___ Compost					lb./1,000 sq. ft.

Size of area involved in sample ___ sq. ft.

SOIL CONDITIONS

Drainage	Drought injury	Topography
X Good	X Seldom	___ Level
___ Fair	___ Occasionally	* Rolling
___ Poor	___ Often	___ Terrace

ASB 002 1095

(See back of this sheet for soil sampling instructions.)

Soil Sampling Instructions — Lawn, Shrub, Home Garden, or Nursery Plantings

WARNING!

Recommendations based on improperly taken samples may injure your plants. It should be recognized also that soil tests only aid in diagnosing troubles due to a lack of or an excess of lime and certain fertilizer elements. Other factors may have an equal or greater influence on plant growth. These include soil drainage, rainfall, insects, diseases, and others. In the case of lawns, height and frequency of cutting and nitrogen fertilization are most important, but they are not taken into consideration in the usual soil test.

1. The best time to sample soils is when the moisture content is right for tilling

2. Use a trowel, spade, auger, or soil tube, and a clean pail, to obtain thin vertical slices or cores of soil from the surface to a depth of 6 to 7 inches at 10 to 15 places throughout a given area. Number of slices or borings may be reduced to 5 to 10 in areas less than 100 square feet.

3. Insert trowel or spade into the soil to a depth of 6 to 7 inches. Remove soil and throw it aside. Then take a one-half inch slice of soil and keep it on the trowel or spade. Use a knife to cut from this slice on the trowel or spade a 1-inch core from top to bottom and place it in a clean bucket or container. Repeat this procedure at each of the 10 to 15 places.

4. Sample separately areas that have received different lime and/or fertilizer treatments. Also sample separately areas used for different types of plants. For example, keep samples taken from lawn areas separate from samples taken from flower and shrub areas. Samples from rhododendron, azalea, and other broadleaf evergreen areas should be kept separate from other shrub areas.

5. Where poor growth exists, separate samples should be taken from both good and bad areas if possible and submitted separately.

6. Do not sample areas that have been limed or fertilized within the past few weeks unless trouble is evident.

7. If soil is wet when taken, it should be spread out on a clean paper to air dry. After air drying, mix thoroughly soil taken from the different places for each sample and put one-half to 1 pint in plastic bag and seal with rubber band.

8. Do not put more than one sample in each sample bag.

9. Place plastic bag in cloth bag and tie. Follow mailing instructions on envelope attached to bag.

10. Keep your own record of areas sampled, sample and serial numbers, and date mailed to laboratory. Fill out soil sample questionnaire on opposite side of this sheet and return in envelope attached to sample bag.

COOPERATIVE EXTENSION SERVICE/COOK COLLEGE
RUTGERS, THE STATE UNIVERSITY OF NEW JERSEY
NEW BRUNSWICK

Distributed in cooperation with U.S. Department of Agriculture in furtherance of the Acts of Congress of May 8 and June 30, 1914. Cooperative Extension Service work in agriculture, home economics, and 4-H. John L. Gerwig, dean of Extension. The Cooperative Extension Service provides information and educational services to all people without regard to sex, race, color, national origin, or handicap. The Cooperative Extension Service is an Equal Opportunity Employer.

ASB 002 1096

THE STATE UNIVERSITY OF NEW JERSEY
RUTGERS
Campus at New Brunswick

SOIL TEST REPORT

Soil Testing Laboratory, Lipman Hall
New Jersey Agricultural Experiment Station

Place stamps for special tests here.

Soil Sample Questionnaire for Lawn, Shrub, Home Garden, or Nursery Plantings

ASBESTOS MOUND — Name
11-17-86 — Date
MILLINGTON SITE- MILLINGTON — Street or R.D. number, City
N.J. — State
MS1551 — Zip code

Sample No. #2 Serial No.

Do not write in this space. For laboratory use only.

SOIL TEST RESULTS

Soil texture L

pH	Magnesium	Phosphorus	Potassium	
7.2	763	<13	172	2492

Serial No. 4436
Laboratory No.

(IMPORTANT: WE WILL BE ABLE TO SUPPLY YOU WITH BETTER LIME AND FERTILIZER RECOMMENDATIONS IF YOU COMPLETE THE FOLLOWING SECTIONS.)

Plants to be grown

___ New lawn to be planted. X Established ~~lawn~~ hill

In area – ___ shady X partly shady ___ sunny

___ Flowers: Kind: Various trees

___ New plantings to be made. ___ Established plantings.

___ Shrubs: Kind: Various

___ New plantings to be made. ___ Established plantings.

None Vegetables: Kind: None

___ New plantings to be made. ___ Established plantings.

___ Other: Kind: Pasm & Sumac

Describe any specific problems you have had in this soil area:
Asbestos contamination

Lime, fertilizer, and organic materials added in recent years

	When applied Month	Year	Kind	Amount	
___ Lime					
___ Fertilizer					lb./1,000 sq. ft.
___ Manure					lb./1,000 sq. ft.
___ Compost					lb./1,000 sq. ft.

Size of area involved in sample ___ sq. ft.

SOIL CONDITIONS

Drainage	Drought injury	Topography
X Good	X Seldom	X Level
___ Fair	___ Occasionally	X Rolling
___ Poor	___ Often	___ Terrace

ASB 002 1097

(See back of this sheet for soil sampling instructions.)

Soil Sampling Instructions — Lawn, Shrub, Home Garden, or Nursery Plantings

WARNING!

Recommendations based on improperly taken samples may injure your plants. It should be recognized also that soil tests only aid in diagnosing troubles due to a lack of or an excess of lime and certain fertilizer elements. Other factors may have an equal or greater influence on plant growth. These include soil drainage, rainfall, insects, diseases, and others. In the case of lawns, height and frequency of cutting and nitrogen fertilization are most important, but they are not taken into consideration in the usual soil test.

1. The best time to sample soils is when the moisture content is right for tilling

2. Use a trowel, spade, auger, or soil tube, and a clean pail, to obtain thin vertical slices or cores of soil from the surface to a depth of 6 to 7 inches at 10 to 15 places throughout a given area. Number of slices or borings may be reduced to 5 to 10 in areas less than 100 square feet.

3. Insert trowel or spade into the soil to a depth of 6 to 7 inches. Remove soil and throw it aside. Then take a one-half inch slice of soil and keep it on the trowel or spade. Use a knife to cut from this slice on the trowel or spade a 1-inch core from top to bottom and place it in a clean bucket or container. Repeat this procedure at each of the 10 to 15 places.

4. Sample separately areas that have received different lime and/or fertilizer treatments. Also sample separately areas used for different types of plants. For example, keep samples taken from lawn areas separate from samples taken from flower and shrub areas. Samples from rhododendron, azalea, and other broadleaf evergreen areas should be kept separate from other shrub areas.

5. Where poor growth exists, separate samples should be taken from both good and bad areas if possible and submitted separately.

6. Do not sample areas that have been limed or fertilized within the past few weeks unless trouble is evident.

7. If soil is wet when taken, it should be spread out on a clean paper to air dry. After air drying, mix thoroughly soil taken from the different places for each sample and put one-half to 1 pint in plastic bag and seal with rubber band.

8. Do not put more than one sample in each sample bag.

9. Place plastic bag in cloth bag and tie. Follow mailing instructions on envelope attached to bag.

10. Keep your own record of areas sampled, sample and serial numbers, and date mailed to laboratory. Fill out soil sample questionnaire on opposite side of this sheet and return in envelope attached to sample bag.

COOPERATIVE EXTENSION SERVICE/COOK COLLEGE
RUTGERS, THE STATE UNIVERSITY OF NEW JERSEY
NEW BRUNSWICK

Distributed in cooperation with U.S. Department of Agriculture in furtherance of the Acts of Congress of May 8 and June 30, 1914. Cooperative Extension Service work in agriculture, home economics, and 4-H. John L. Gerwig, dean of Extension. The Cooperative Extension Service provides information and educational services to all people without regard to sex, race, color, national origin, or handicap. The Cooperative Extension Service is an Equal Opportunity Employer.

ASB 002 1098

APPENDIX E

TEST PIT LOGS

MILLINGTON SITE

(0614n-22)

ASB 002 1099

FRED C. HART ASSOCIATES, INC.

TEST PIT LOG

TEST PIT LOCATION SKETCH MAP

N

TEST PIT NO. 2	
PROJECT NO./NAME: Circle Section	LOCATION: Center of Asbestos Mound
EXCAVATOR/EQUIPMENT/OPERATOR	
HART INSPECTOR, OFFICE: Steve Hamilton / NYC	START/FINISH DATE: 5-14-86
ELEVATION OF: GROUND SURFACE, BOTTOM OF PIT (FT. ABOVE MSL)	CONDITION OF PIT
REMARKS:	

DEPTH	SAMPLE INTERVAL	DESCRIPTION OF MATERIALS	REMARKS
0, 1		Silty fill of brown-red color	Plant-roots reach down to 3'
2, 3, 4, 5, 6, 7, 8, 9		Pure white asbestos fiber occassional green + pink-colored fibers	
10, 11, 12, 13, 14, 15			

ASB 002 1100

FRED C. HART ASSOCIATES, INC.

HART

TEST PIT LOG

TEST PIT LOCATION SKETCH MAP

TEST PIT NO. 1	
PROJECT NO. NAME [illegible]	LOCATION [illegible] site North of asbestos [illegible]
EXCAVATOR EQUIPMENT OPERATOR	
HART INSPECTOR OFFICE Steve Hambles / NJTC	START. FINISH DATE 3-10-86
ELEVATION OF: GROUND SURFACE BOTTOM OF PIT (FT. ABOVE MSL)	CONDITION OF PIT
REMARKS:	

DEPTH	SAMPLE INTERVAL	DESCRIPTION OF MATERIALS	REMARKS
0, 1, 2, 3, 4		silty fill with roots + asbestos shingles comprising the upper 2'.	
5		soft yellow silt	
6		asbestos fiber layer	
7, 8, 9		extremely weathered shale bedrock	water encountered at bottom of shale - low yield
10, 11, 12, 13, 14, 15			

ASB 002 1101

APPENDIX F

SLUG TEST RAW DATA

ASB 002 1102

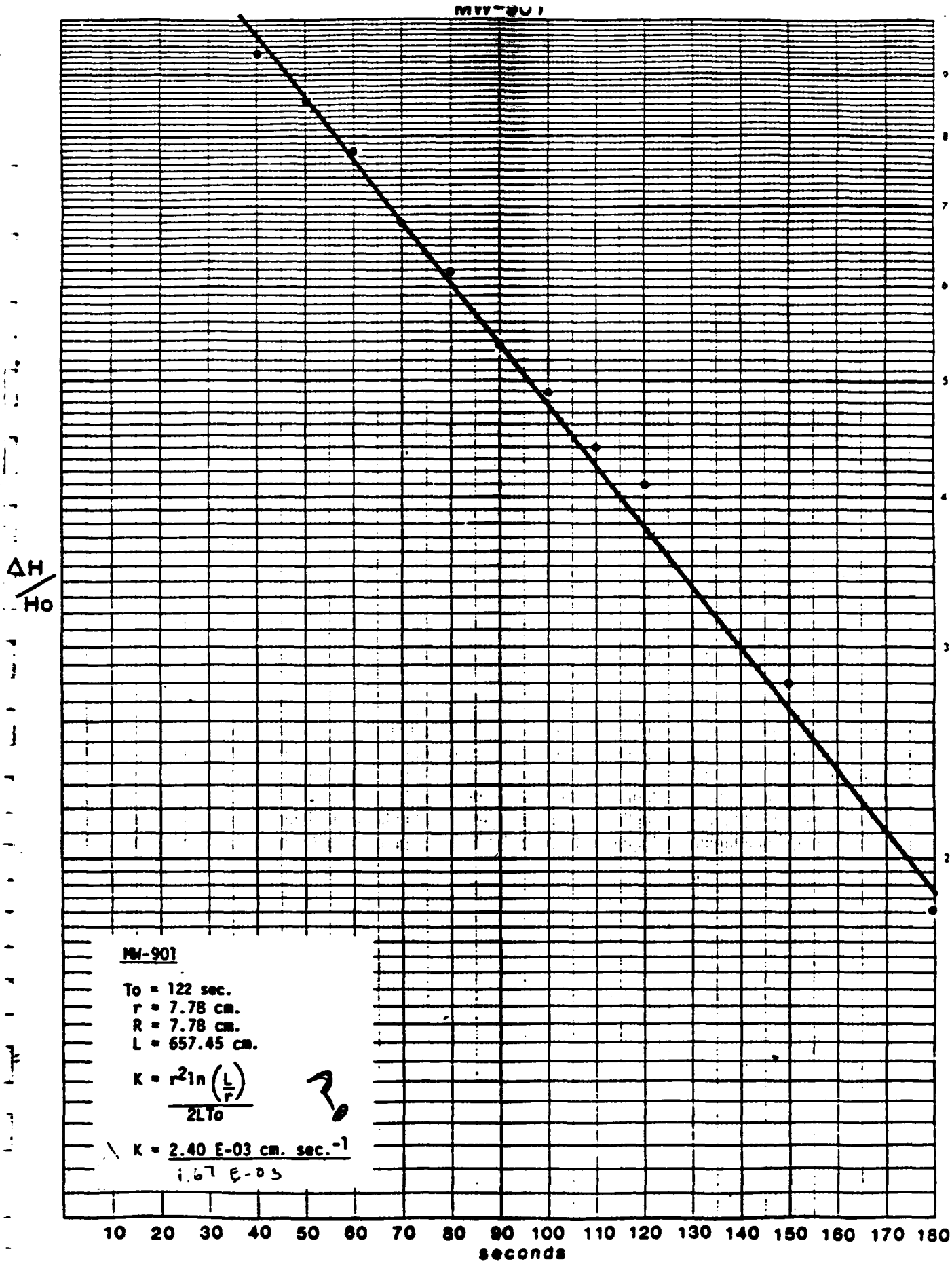
MW-901
ΔH/Ho
9
8
7
6
5
4
3
2
10 20 30 40 50 60 70 80 90 100 110 120 130 140 150 160 170 180
seconds
MW-901
To = 122 sec.
r = 7.78 cm.
R = 7.78 cm.
L = 657.45 cm.
K = r²ln(L/r) / 2LTo
K = 2.40 E-03 cm. sec.⁻¹
1.67 E-03

ASB 002 1103

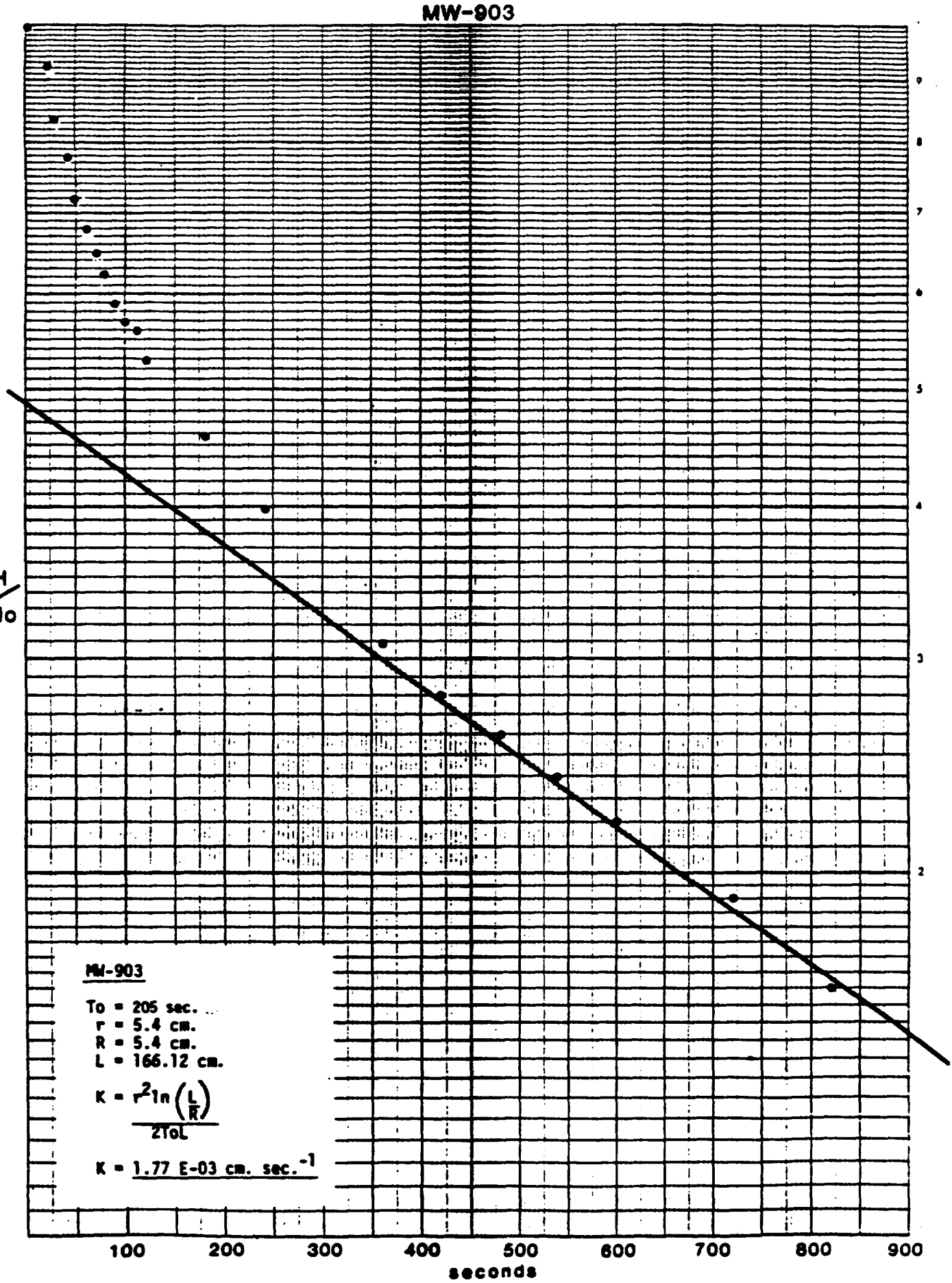
MW-903
ΔH/Ho
9
8
7
6
5
4
3
2
100
200
300
400
500
600
700
800
900
seconds
MW-903
To = 205 sec.
r = 5.4 cm.
R = 5.4 cm.
L = 166.12 cm.
K = r²ln(L/R) / 2ToL
K = 1.77 E-03 cm. sec.⁻¹

ASB 002 1104

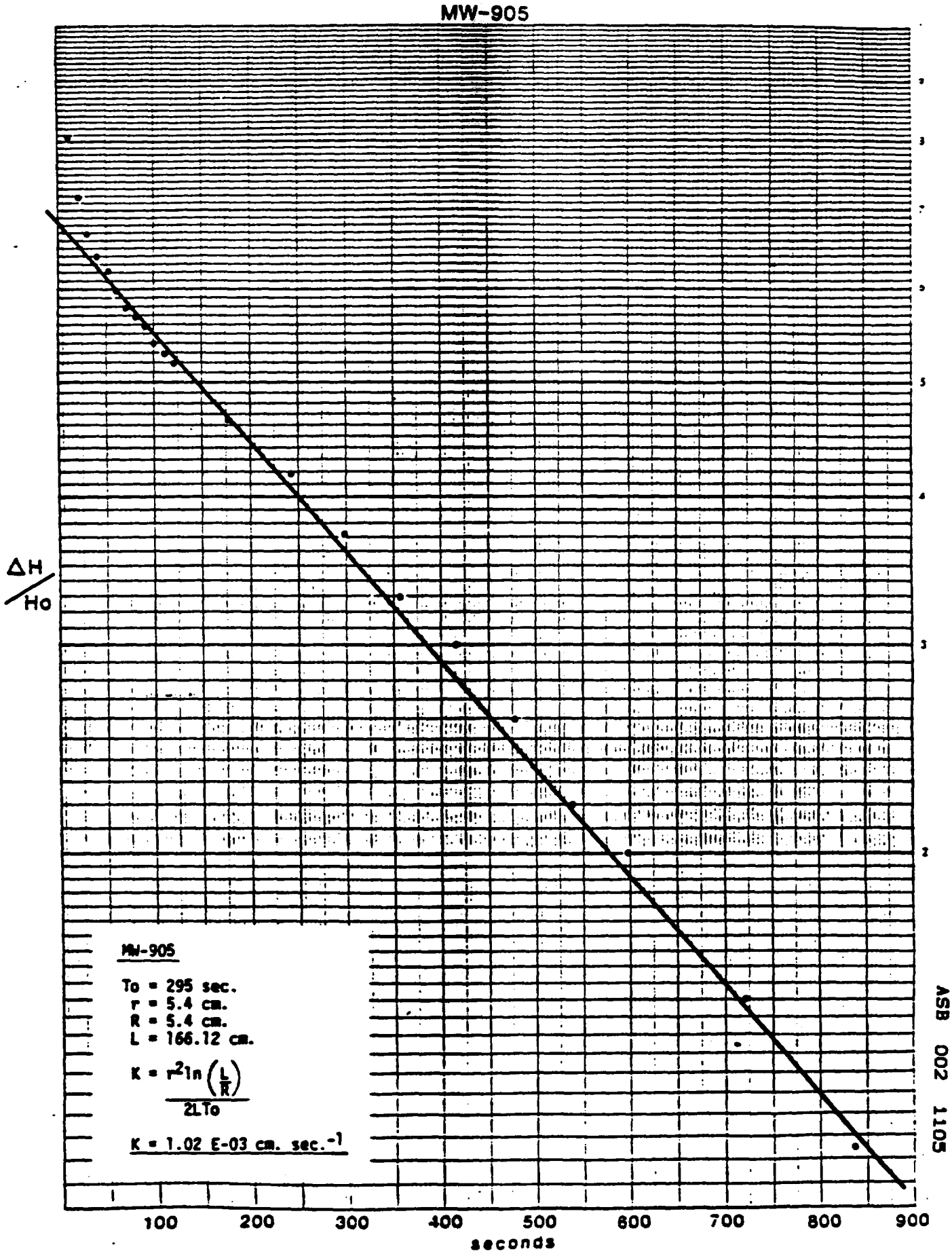
MW-905
ΔH/Ho
100
200
300
400
500
600
700
800
900
seconds
MW-905
To = 295 sec.
r = 5.4 cm.
R = 5.4 cm.
L = 166.12 cm.
K = r²ln(L/R) / 2LTo
K = 1.02 E-03 cm. sec.⁻¹

ASB 002 1105

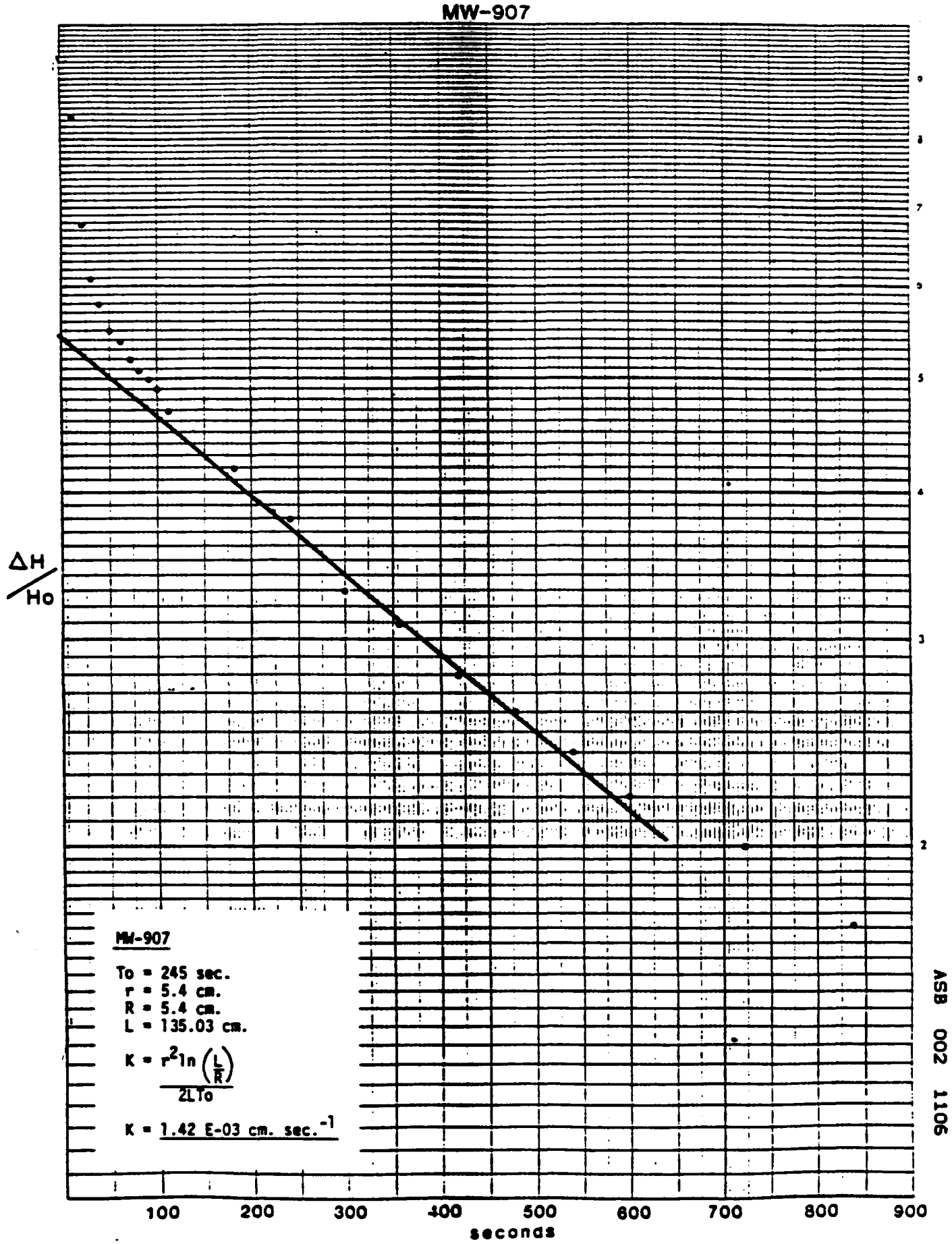
MW-907
ΔH/Ho
9
8
7
6
5
4
3
2
100
200
300
400
500
600
700
800
900
seconds
MW-907
To = 245 sec.
r = 5.4 cm.
R = 5.4 cm.
L = 135.03 cm.
K = r²ln (L/R) / 2LTo
K = 1.42 E-03 cm. sec.⁻¹

ASB 002 1106

APPENDIX G

ASBESTOS RESULTS

ASB 002 1107

ASBESTOS IN AIR

ASB 002 1108

Princeton Service Center
U.S. Route 1
609-452-9050
TLX 84-3492

princeton testing laboratory

August 26, 1986

TO: Fred C. Hart Associates, Inc.
530 Fifth Ave
New York, NY 10036-5166

JOB #: 86H1366

ANALYSIS: Asbestos in air

METHOD: NIOSH 7400, Phase contrast microscopy

DATE OF TEST: ---

LOCATION: Millington - Project #01005-00-85001-00

RESULTS:

Sample	Time	Volume (l)	Fibers/cc
8- 6 well 903	0918-1218	378	< 0.01
8-11 well 904	1000-1300	387	< 0.01
8-12 well 902	1010-1310	396	< 0.01
8-12 well 908	1010-1310	378	< 0.01
8-12 blank	0910-1210	--	< 0.01
8-13 well 906	1000-1300	378	< 0.01

David Kichula

David Kichula, Manager
Industrial Hygiene

ASB 002 1109

Princeton Service Center
U.S. Route 1
609-452-9050
TLX 84-3492

princeton testing laboratory

P.O. Box 2102, Princeton, N.J. 08540

Member

September 25, 1986

TO: Fred C. Hart Associates
530 5th Avenue
New York, NY 10036

JOB #: 86H1420

ANALYSIS: Asbestos in air

METHOD: NIOSH 7400, Phase contrast microscopy

DATE OF TEST: 8-15-86

LOCATION: Well 905, Well 907

RESULTS:

Sample	Time	Volume (l)	Fibers/cc
Well 905	1227-1427	252	< 0.01
Well 907	1310-1540	315	< 0.01
Blank	---	---	< 0.01

David Kichula

David Kichula, Manager
Industrial Hygiene

ASB 002 1110

Princeton Service Center
U.S. Route 1
609-452-9050
TLX 84-3492

princeton testing laboratory

Member

ASBESTOS FIBER ANALYSIS by TRANSMISSION ELECTRON MICROSCOPY (TEM), SELECTED AREA ELECTRON DIFFRACTION (SAED), and ENERG DISPERSIVE X-RAY MICROANALYSIS (EDX) --- EPA LEVEL II

Air Sample # Blank
Project: Fred C. Hart Assoc. Job # SoH 1420 PO # 7566

CONDENSED DATA

1.	Number of Asbestos Fibers analyzed	0
2.	Number of Nonasbestos Fibers analyzed	1
3.	Number of Ambiguous Fibers analyzed	0
4.	Asbestos type:	none detected
5.	Number of Asbestos fibers in whole filter (in millions)	0.0000
6.	Detection Limit	0.0067
7.	Percentage of concentration due to Asbestos Fibers ≥ 5 µm (microns) in length	0.000 %
8.	Mass of Asbestos Fibers (nanograms/filter)	0.0000
9.	Percentage of mass due to Asbestos fibers equal to or greater than 5 µm in length	0.0000 %

Comments: Grid openings analyzed: 20.000 Filter: MCE 37mm
PCM equivalent fibers/filter (million) 0.0067

ASB 002 1111

Air Sample # Blank

FIBER TYPE and FIBER SIZE DISTRIBUTION

	CHRYSOTILE	AMPHIBOLE	AMBIGUOUS	NONASBESTOS	TOTAL ASBESTOS	TOTAL FIBERS
COUNT						
Fibers Analyzed	0	0	0	1	0	1
# of Fibers in Whole Filter in millions of fibers	0.000	0.000	0.000	0.0067	0.000	0.007
MASS						
Concentration in ng/filter	0.000	0.000	------	------	0.000	------
% of Mass due to Fibers ≥ 5 µm in length	0.000%	0.000%	------	------	0.000%	------

ASB 002 1112

Princeton Service Center
U.S. Route 1
609-452-9050
TLX 84-3492

princeton testing laboratory

Mercer

ASBESTOS FIBER ANALYSIS by TRANSMISSION ELECTRON MICROSCOPY (TEM), SELECTED AREA ELECTRON DIFFRACTION (SAED), and ENERGY DISPERSIVE X-RAY MICROANALYSIS (EDS) --- EPA LEVEL II

Air Sample # Test Pit 2 Downwind
Project: Fred C. Hart Assoc. Job # SoH 1420 PO # 7566
Volume= 35.4000 Liters

CONDENSED DATA

1.	Number of Asbestos Fibers analyzed	0
2.	Number of Nonasbestos Fibers analyzed	8
3.	Number of Ambiguous Fibers analyzed	0
4.	Asbestos type:	none detected
5.	Concentration (in fibers/cc or million/m3) of Asbestos Fibers	0.0000
6.	Detection Limit	0.1893
7.	Percentage of concentration due to Asbestos Fibers ≥ 5 µm (microns) in length	0.000 %
8.	Mass of Asbestos Fibers (nanograms/m3)	0.0000
9.	Percentage of mass due to Asbestos fibers equal to or greater than 5 µm in length	0.0000 %

Comments: Grid openings analyzed: 20.0 Filter Type: MCE 37 mm
PCM equivalent (fibers/cc) 2.2712
Nonasbestos fibers present were glass, cellulose, other organic fibers and fibers containing the element Si.

ASB 002 1113

SAMPLE # Test Pit 2 Composite

FIBER TYPE and FIBER SIZE DISTRIBUTION

	CHRYSOTILE	AMPHIBOLE	AMBIGUOUS	NONASBESTOS	TOTAL ASBESTOS	TOTAL FIBERS
COUNT						
Fibers Analyzed	0	0	0	9	0	9
# of Fibers in Whole Filter in millions of fibers	0.000	0.000	0.000	0.0536	0.000	0.054
Concentration in million fibers/m3	0.000	0.000	0.000	1.5141	0.000	1.514
% of Count due to Fibers ≥ 5 µm in length	0.000%	0.000%	0.000%	———	0.000%	———
MASS						
Concentration in ng/m3	0.000	0.000	------	------	0.000	------
% of Mass due to Fibers ≥ 5 µm in length	0.000%	0.000%	———	------	0.000%	———

ASB 002 1114

Princeton Service Center
U.S. Route 1
609-452-9050
TLX 84-3492

princeton testing laboratory

Member

ASBESTOS FIBER ANALYSIS by TRANSMISSION ELECTRON MICROSCOPY (TEM), SELECTED AREA ELECTRON DIFFRACTION (SAED), and ENERGY DISPERSIVE X-RAY MICROANALYSIS (EDX) --- EPA LEVEL II

Air Sample # Test Pit 2 Upwind
Project: Fred C. Hart Assoc. Job # SoH 1430 PO # 7566
Volume= 45.0000 Liters

CONDENSED DATA

1.	Number of Asbestos Fibers analyzed	1
2.	Number of Nonasbestos Fibers analyzed	5
3.	Number of Ambiguous Fibers analyzed	0
4.	Asbestos type:	amosite amphibole
5.	Concentration (in fibers/cc or million/m^3) of Asbestos Fibers	0.2978
6.	Detection Limit	0.2978
7.	Percentage of concentration due to Asbestos Fibers $\geq$ 5 µm (microns) in length	0.000 %
8.	Mass of Asbestos Fibers (nanograms/m^3)	436.667
9.	Percentage of mass due to Asbestos fibers equal to or greater than 5 µm in length	0.0000 %

Comments: Grid openings analyzed: 10.0 Filter Type: MCE 37 mm
PCM equivalent (fibers/cc) 4.467
Nonasbestos fibers present were cellulose and other organic fibers.

ASB 002 1115

SAMPLE # Test Pit 2 Upwind

FIBER TYPE and FIBER SIZE DISTRIBUTION

	CHRYSOTILE	AMPHIBOLE	AMBIGUOUS	NONASBESTOS	TOTAL ASBESTOS	TOTAL FIBERS
COUNT						
Fibers Analyzed	0	1	0	5	1	6
# of Fibers in Whole Filter in millions of fibers	0.000	0.013	0.000	0.0670	0.013	0.080
Concentration in million fibers/m3	0.000	0.298	0.000	1.4889	0.298	1.787
% of Count due to Fibers ≥ 5 µm in length	0.000%	0.000%	0.000%	------	0.000%	------
MASS						
Concentration in ng/m3	0.000	426.667	------	------	426.667	------
% of Mass due to Fibers ≥ 5 µm in length	0.000%	0.000%	------	------	0.000%	------

Princeton Service Center
U.S. Route 1
609-452-9050
TLX 84-3492

princeton testing laboratory

Member

ASBESTOS FIBER ANALYSIS by TRANSMISSION ELECTRON MICROSCOPY (TEM), SELECTED AREA ELECTRON DIFFRACTION (SAED), and ENERGY DISPERSIVE X-RAY MICROANALYSIS (EDX) --- EPA LEVEL II

Air Sample # Test Pit 1 Downwind
Project: Fred C. Hart Assoc. Job # 8aH 1420 PO # 7Sbb
Volume= 72.0000 Liters

CONDENSED DATA

1.	Number of Asbestos Fibers analyzed	0
2.	Number of Nonasbestos Fibers analyzed	1
3.	Number of Ambiguous Fibers analyzed	0
4.	Asbestos type:	none detected
5.	Concentration (in fibers/cc or million/m3, of Asbestos Fibers	0.0000
6.	Detection Limit	0.1961
7.	Percentage of concentration due to Asbestos Fibers ≥ 5 µm (microns) in length	0.000 %
8.	Mass of Asbestos Fibers (nanograms/m^3)	0.0000
9.	Percentage of mass due to asbestos fibers equal to or greater than 5 µm in length	0.0000 %

Comments: Grid openings analyzed: 10.0 Filter Type: MCE 37 mm
PCM equivalent (fibers/cc) 0.7444

ASB 002 1117

SAMPLE # Test Pit 1 Downwind

FIBER TYPE and FIBER SIZE DISTRIBUTION

	CHRYSOTILE	AMPHIBOLE	AMBIGUOUS	NONASBESTOS	TOTAL ASBESTOS	TOTAL FIBERS
COUNT						
Fibers Analyzed	0	0	0	1	0	1
# of Fibers in Whole Filter in millions of fibers	0.000	0.000	0.000	0.0134	0.000	0.013
Concentration in million fibers/m3	0.000	0.000	0.000	0.1861	0.000	0.186
% of Count due to Fibers ≥ 5 µm in length	0.000%	0.000%	0.000%	------	0.000%	------
MASS						
Concentration in ng/m^3	0.000	0.000	------	------	0.000	------
% of Mass due to Fibers ≥ 5 µm in length	0.000%	0.000%	------	------	0.000%	------

ASB 002 1118

Princeton Service Center
U.S. Route 1
609-452-9050
TLX 84-3492

princeton testing laboratory

Member

ASBESTOS FIBER ANALYSIS by TRANSMISSION ELECTRON MICROSCOPY (TEM), SELECTED AREA ELECTRON DIFFRACTION (SAED), and ENERGY DISPERSIVE X-RAY MICROANALYSIS (EDX) --- EPA LEVEL II

Air Sample # Test Pit 1 Upwind
Project: Fred C. Hart Assoc. Job # 86H 1420 PO # 75o6
Volume= 80.0000 Liters

CONDENSED DATA

1.	Number of Asbestos Fibers analyzed	0
2.	Number of Nonasbestos Fibers analyzed	3
3.	Number of Ambiguous Fibers analyzed	0
4.	Asbestos type:	none detected
5.	Concentration (in fibers/cc or million/m3) of Asbestos Fibers	0.0000
6.	Detection Limit	0.0038
7.	Percentage of concentration due to Asbestos Fibers ≥ 5 µm (microns) in length	0.000 %
8.	Mass of Asbestos Fibers (nanograms/m3)	0.0000
9.	Percentage of mass due to Asbestos fibers equal to or greater than 5 um in length	0.0000 %

Comments: Grid openings analyzed: 20.0 Filter Type: MCE 37 mm
PCM equivalent (fibers/cc) 0.4133

ASB 002 1119

SAMPLE # Test Pit 1 Upwind

FIBER TYPE and FIBER SIZE DISTRIBUTION

	CHRYSOTILE	AMPHIBOLE	AMBIGUOUS	NONASBESTOS	TOTAL ASBESTOS	TOTAL FIBERS
COUNT						
Fibers Analyzed	0	0	0	3	0	3
# of Fibers in Whole Filter in millions of fibers	0.000	0.000	0.000	0.0201	0.000	0.020
Concentration in million fibers/m3	0.000	0.000	0.000	0.2513	0.000	0.251
% of Count due to Fibers ≥ 5 µm in length	0.000%	0.000%	0.000%	------	0.000%	------
MASS						
Concentration in ng/m^3	0.000	0.000	------	------	0.000	------
% of Mass due to Fibers ≥ 5 µm in length	0.000%	0.000%	------	------	0.000%	------

ASB 002 1120

FALNCEION TESTING LABORATORY

MONITORING DATA SHEET

CLIENT: Fred C. Hart Assoc. DATE 8/15/86

ADDRESS: 730 5th Ave. JOB #: 01005-00-P5001-00

New York, N.Y. 10036 SAMPLE NO. SAMPLE NO.

FILTERS: TENAX:

DESCRIPTION OF TEST: Ambient air IMPINGERS: CHARCOAL:

Sampler Blank by *TEM* BULK/WIPE: CHROM. 102:

OTHER: SILICA GEL:

LOCATION: Test Pits 1 & 2 BAROMETIC PRESSURE Significant mm Hg

TRIP Plant for Test Pits TEMPERATURE 78-83 °F

PAYMENT: RELATIVE HUMIDITY 58 %

CALIBRATED BY/DATE Alex 8/15/86 CORRECTION FACTOR (STP)

Analyze by TEM

SAMPLE ID	Flow Rate (l/min)	Start Time	Stop Time	Time Elapse	Corrected Sample Volume (l)
Test Pit #1					
#1 [redacted] Upwind	2.0	3:20	4:00	40 min	80 liters
#2 [redacted] Downwind	1.8	3:20	4:00	40 min	72 liters
[redacted]					
3 Test Pit 2 Upwind	2.25	4:25	4:45	20 min	45 liters
Downwind	1.725	4:25	4:45	20 min	34.5 liters
4 Trip Blanks For					
Test Pit Samples					

RELINQUISHED BY:	TIME/DATE	RECEIVED BY:	TIME/DATE	RELINQUISHED BY:	TIME/DATE	RECEIVED BY:
F. Lee	8/15/86	[illegible]				

ASB 002 1121

PRINCETON TESTING LABORATORY

MONITORING DATA SHEET

CLIENT: Fred C. Hart Assoc.
DATE: 8/13/86
ADDRESS: 530 5th Ave.
JOB #: 01005-00475001-00
New York, N.Y. 10036
SAMPLE NO. / SAMPLE NO.
Attn: Francine Barker
FILTERS: / TENAX:
DESCRIPTION OF TEST: Air Sampling
IMPINGERS: / CHARCOAL:
for Asbestos
BULK/WIPE: / CHROM. 102:
OTHER: / SILICA GEL:
LOCATION: Well 902, Well 908,
BAROMETIC PRESSURE: Slight wind < 5 mph mm Hg
Field Blank
TEMPERATURE: 66° °F
PAYMENT:
RELATIVE HUMIDITY: 60% %
CALIBRATED BY/DATE: A. Lowy 8/13/86
CORRECTION FACTOR: (STP)

	SAMPLE ID		Flow Rate (l/min)	Start Time	Stop Time	Time Elapse	Corrected Sample Volume (l)
	Well 902	Start calibrate	2.2	10:10	[illegible]	[illegible]	
		Stop calibr.	2.2				
4	on rig	Average	2.2	x 180 =	→		396 liters
	Well 908	Start Calibrat.	2.2	10:10	1:10	3 hrs.	
	on tree left	Stop Calibrate	2.0				
	from rig.	Average	2.1	x 180 =	→		378 liters
5							
6	Field Blank		—	9:10	12:10	3 hrs.	—
	Site-Near U-Haul						

RELINQUISHED BY:	TIME/DATE	RECEIVED BY:	TIME/DATE	RELINQUISHED BY:	TIME/DATE	RECEIVED BY:
Hans Lowy	~~8/13/86~~ AL 8/13/86	L. Alfieri	8/14/86	10:35		

ASB 002 1122

PRINCETON TESTING LABORATORY

MONITORING DATA SHEET

CLIENT: Fred C Hart Assoc

ADDRESS: [illegible] 7th Ave
New York N.Y. 10036

DESCRIPTION OF TEST: Air Sampling for Asbestos

LOCATION: Well 904

PAYMENT:

CALIBRATED BY/DATE AL 8/11/86

DATE 8/11/86

JOB #: [illegible]

SAMPLE	NO.	SAMPLE	NO.
FILTERS:		TENAX:	
IMPINGERS:		CHARCOAL:	
BULK/WIPE:		CHROM. 102:	
OTHER:		SILICA GEL:	

BAROMETIC PRESSURE Slight wind mm Hg

TEMPERATURE 75 °F

RELATIVE HUMIDITY 90 %

CORRECTION FACTOR (STP)

SAMPLE ID	Flow Rate (l/min)	Start Time	Stop Time	Time Elapse	Corrected Sample Volume (l)
3 Well 904 calibration before	2.2	10:00 AM	1:00 PM	3 hrs.	387 liters
After calibration	2.1				
on rig average	2.15				387 liters

RELINQUISHED BY:	TIME/DATE	RECEIVED BY:	TIME/DATE	RELINQUISHED BY:	TIME/DATE	RECEIVED BY:
Kevin Levy	~~8/14/86~~ AL 8/12/86	[illegible]	8/14/86	10:35		

ASB 002 1123

PRINCETON TESTING LABORATORY

MONITORING DATA SHEET

CLIENT: Fred Hart Assoc.

ADDRESS: 530 5th Ave
New York N.Y. 10036

DESCRIPTION OF TEST: Air Sampling for Asbestos

LOCATION: Well 903 (no wind) - Overcast

PAYMENT:

CALIBRATED BY/DATE Alex 8/6/86

DATE 8/6/86

JOB #: 01005-00-850010

SAMPLE NO. | SAMPLE NO.

FILTERS: | TENAX:

IMPINGERS: | CHARCOAL:

BULK/WIPE: | CHROM. 102:

OTHER: | SILICA GEL:

BAROMETIC PRESSURE No Wind - Overcast mm Hg

TEMPERATURE 76 °F

RELATIVE HUMIDITY 80 %

CORRECTION FACTOR (STP)

SAMPLE ID	Flow Rate (l/min)	Start Time	Stop Time	Time Elapse	Corrected Sample Volume (l)
Well 903 (before calibration) Morning	2.3	9:18	12:18	3 hrs.	
After calibration	1.9				
2 Average	2.1			3 hrs.	(378 liters)

RELINQUISHED BY:	TIME/DATE	RECEIVED BY:	TIME/DATE	RELINQUISHED BY:	TIME/DATE	RECEIVED BY:
Aaron Levy	8/13/86 AL	[illegible]	8/14/86 10:35			

ASB 002 1124

PRINCETON TESTING LABORATORY

MONITORING DATA SHEET

CLIENT: Fred C Hart

DATE 8/13/86

ADDRESS: 530 5th Ave.
New York, N.Y. 10036

JOB #: 0005-00-85001-00

SAMPLE NO. | SAMPLE NO.

FILTERS: | TENAX:

DESCRIPTION OF TEST: Air Sampling for Asbestos

IMPINGERS: | CHARCOAL:

BULK/WIPE: | CHROM. 102:

OTHER: | SILICA GEL:

LOCATION: Well 906
4.5' High - on Rig

BAROMETIC PRESSURE 5MPH-Wind mm Hg

TEMPERATURE 67-75 °F

PAYMENT:

RELATIVE HUMIDITY 32 %

CALIBRATED BY/DATE A. Levy 8/13/86

CORRECTION FACTOR _____ (STP)

SAMPLE ID	Flow Rate (l/min)	Start Time	Stop Time	Time Elapse	Corrected Sample Volume (l)
Well 906 Before Calibration	2.1	10:00	1:00	180min	
After Calibration	2.1				
Ave.	2.1				378 liters

RELINQUISHED BY:	TIME/DATE	RECEIVED BY:	TIME/DATE	RELINQUISHED BY:	TIME/DATE	RECEIVED BY:
Aaron Levy	8/13/86	8/14/86 10:35	[illegible]			

ASB 002 1125

MONITORING DATA SHEET

CLIENT: [illegible] DATE 2/1-12

ADDRESS: 120 7th Ave. JOB #: [illegible]

New York N.Y. 10036 SAMPLE NO. SAMPLE NO.

FILTERS: TENAX:

DESCRIPTION OF TEST: Asbestos IMPINGERS: CHARCOAL:

air samples done by BULK/WIPE: CHROM. 102:

NIOSH Method OTHER: SILICA GEL:

LOCATION: Hall 905 BAROMETIC PRESSURE No wind mm Hg

TEMPERATURE 78-83 °F

PAYMENT: RELATIVE HUMIDITY 58 %

CALIBRATED BY/DATE P. Levy 2/15/86 CORRECTION FACTOR (STP)

SAMPLE ID	Flow Rate (l/min)	Start Time	Stop Time	Time Elapse	Corrected Sample Volume (l)
Hall 905					
Calibration Before	2.1	12:27	2:27	2 hrs.	
After	2.1				
Average	2.1				252 liters

RELINQUISHED BY:	TIME/DATE	RECEIVED BY:	TIME/DATE	RELINQUISHED BY:	TIME/DATE	RECEIVED BY:
P. Levy	2/10/86	[illegible]				

ASB 002 1126

PRINCETON TESTING LABORATORY

MONITORING DATA SHEET

CLIENT: [illegible] DATE [illegible]

ADDRESS: [illegible] JOB #: [illegible]

New York, NY 10036 SAMPLE NO. SAMPLE NO.

FILTERS: TENAX:

DESCRIPTION OF TEST: Fiber & IMPINGERS: CHARCOAL:

air sampling done by BULK/WIPE: CHROM. 102:

PCM method OTHER: SILICA GEL:

LOCATION: Well 907 BAROMETIC PRESSURE mm Hg

TEMPERATURE 75 °F

PAYMENT: RELATIVE HUMIDITY 48 %

CALIBRATED BY/DATE NJ 8/14/86 CORRECTION FACTOR (STP)

SAMPLE ID	Flow Rate (l/min)	Start Time	Stop Time	Time Elapse	Corrected Sample Volume (l)
2 Well = 907 Calibration before	2.1	1:10	3:40	2.5 hrs	
after	2.1				
average	2.1				315 liters
3 Trip Blank					
Millington					

RELINQUISHED BY:	TIME/DATE	RECEIVED BY:	TIME/DATE	RELINQUISHED BY:	TIME/DATE	RECEIVED BY:
A. Levy	8/14/86	[illegible]				

ASB 002 1127

PRINCETON TESTING LABORATORY

MONITORING DATA SHEET

CLIENT: Fred C. Hart Assoc

DATE 8/15/86

ADDRESS: 530 5th Ave, New York, N.Y. 10036

JOB #: 01005-00-85001-00

SAMPLE NO. | SAMPLE NO.

FILTERS: | TENAX:

DESCRIPTION OF TEST: Ambient air sampler done by *TEM*

IMPINGERS: | CHARCOAL:

BULK/WIPE: | CHROM. 102:

OTHER: | SILICA GEL:

LOCATION: Test Pits 1 & 2

BAROMETIC PRESSURE signature on file mm Hg

TRIP Blank for Test Pits

TEMPERATURE 78-83 °F

PAYMENT:

RELATIVE HUMIDITY 58 %

CALIBRATED BY/DATE Alex 8/15/86

CORRECTION FACTOR (STP)

Analyze by TEM

SAMPLE ID	Flow Rate (l/min)	Start Time	Stop Time	Time Elapse	Corrected Sample Volume (l)
Test Pit #1					
#1 Upwind	2.0	3:00	4:00	40 min	80 liters
#2 Downwind	1.8	3:20	4:00	40 min	72 liters
3 Test Pit 2 Upwind	2.25	4:25	4:45	20 min	45 liters
Downwind	1.725	4:45	4:45	20 min	34.5 liters
4 Trip Blanks For Test Pit Samples					

RELINQUISHED BY:	TIME/DATE	RECEIVED BY:	TIME/DATE	RELINQUISHED BY:	TIME/DATE	RECEIVED BY:
A. Lew	8/19/86	[illegible]				

ASB 002 1128

PRINCETON TESTING LABORATORY

MONITORING DATA SHEET

CLIENT: Fred C. Hart Assoc

ADDRESS: 530 5th Ave, New York, N.Y. 10036

DESCRIPTION OF TEST: Asbestos air samples done by *TEM*

LOCATION: Test Pits 1 & 2 TREP Blank for Test Pits

PAYMENT:

CALIBRATED BY/DATE: A Levy 8/15/86

DATE: 8/15/86

JOB #: 01005-00-85001-00

SAMPLE NO. | SAMPLE NO.

FILTERS: | TENAX:

IMPINGERS: | CHARCOAL:

BULK/WIPE: | CHROM. 102:

OTHER: | SILICA GEL:

BAROMETIC PRESSURE: 29 [illegible] mm Hg

TEMPERATURE: 78-83 °F

RELATIVE HUMIDITY: 58 %

CORRECTION FACTOR: (STP)

Analyze by TEM

SAMPLE ID	Flow Rate (l/min)	Start Time	Stop Time	Time Elapse	Corrected Sample Volume (l)
Test Pit #1					
#1 Upwind	2.0	3:20	4:00	40 min	80 liters
#2 Downwind	1.8	3:20	4:00	40 min	72 liters
3 Test Pit 2 Upwind	2.25	4:25	4:45	20 min	45 liters
Downwind	1.775	4:45	4:45	20 min	35.5 liters
4 Trip Blanks For Test Pit Samples					

RELINQUISHED BY:	TIME/DATE	RECEIVED BY:	TIME/DATE	RELINQUISHED BY:	TIME/DATE	RECEIVED BY:
A. Levy	8/19/86	[illegible]				

ASB 002 1129

Princeton Service Center
U.S. Route 1
609-452-9050
TLX 84-3492

princeton testing laboratory

P.O. Box [illegible] Princeton, N.J. [illegible]

Mercer

September 25, 1986

TO: Fred C. Hart Associates
530 5th Ave
New York, NY 10036

ATTENTION: Aaron Levy

JOB #: 86H1624

LOCATION: ---

ANALYSIS REQUESTED: Asbestos in water

PROCEDURE OUTLINED:

An aliquot of 100 ml sample water was filtered through a 47mm Metricel GN-6 Membrane (0.45 micron pore size). An aliquot of deionized water was used as blank. 2.06 micrograms of asbestos (chrysotile) was spiked into both blank and sample water for comparison. The filters were dried in a vacuum dessicator and analyzed by NIOSH Method P & CAM 239 (asbestos fibers in air) using phase contrast microscopy.

RESULTS:

	Asbestos fibers (>5 microns)per liter
SW-1	< 100,000
SW-2	< 100,000
SW-3	100,000
SW-4	100,000
SW-5	< 100,000
SW-6	< 100,000
SW-7	< 100,000

ASB 002 1130

F.C. HART 1.24 Job # 86H1624

CHAIN OF CUSTODY RECORD

PROJECT #: 1048
PROJECT NAME: Burlington / HMET
SAMPLERS SIGNATURE: [illegible]

1 of 2

STAT. #	DATE	TIME	STATION LOCATION	SOLIDS		ASBESTOS	MERCURY	METALS	CYANIDES	ASBESTOS	ORGANICS GC/MS	BASE/NEUTRAL	VOLATILE ORGANICS	PESTICIDES & PCB's	BACTERIOLOGY	MISC. CHEM.	REMARKS
																	all surface water
SW 1	9/10		✓			✓											
SW 2	9/10		✓			✓											
SW 3	9/10		✓			✓											
SW-4	9/10		✓			✓											
SW-5	9/10		✓			✓											
SW 6	9/10		✓			✓											
SW-7	9/11		✓			✓											
SW-8	9/11		✓			✓											
SW-9	9/11		✓			✓											

SAMPLES RECEIVED: HOW MANY CONTAINERS?

Relinquished by: (signature)	Date/time	Received by: (signature)	Relinquished by: (signature)	Date/Time	Rec'd by: (signature)
[illegible]	9/11/86 6:20	[illegible]	[illegible]	0900hr 9/12/86	[illegible]
Relinquished by:	Date/time	Received by: (Signature)	Relinquished by: (Signature)	Date/Time	Rec'd by: (signature)

Relinquished by: (Signature)	Date/Time	Rec'd for laboratory by (signature):	Date/Time	REMARKS:

PRINCETON TESTING LABORATORY, PO BOX 3108, PRINCETON, NJ 08540

TEST 200 BSV

R

CHAIN OF CUSTODY RECORD

PROJECT # | PROJECT NAME:

SAMPLERS SIGNATURE

STAT.#	DATE	TIME			STATION LOCATION	SOLIDS			MERCURY	METALS	CYANIDES	ASBESTOS	ANALYSIS REQUIRED: ORGANICS CC/MS	BASE/ NEUTRAL	VOLATILE ORGANICS	PESTICIDE & PCB's	BACTERI-OLOGY	MISC. CHEM.		REMARKS
[illegible]	[illegible]	[illegible]			[illegible]							X								[illegible]
[illegible]	[illegible]	[illegible]			[illegible]															

SAMPLES RECEIVED: HOW MANY CONTAINERS? 2

Relinquished by: (signature)	Date/time	Received by: (signature)	Relinquished by: (signature)	Date/Time	Rec'd by: (signature)
[illegible]	[illegible]	[illegible]	[illegible]	10/6/88	
Relinquished by:	Date/time	Received by: (Signature)	Relinquished by: (Signature)	Date/Time	Rec'd by: (signature)
Relinquished by: (Signature)	Date/Time	Rec'd for laboratory by (signature):	Date/Time	REMARKS:	

PRINCETON TESTING LABORATORY, PO BOX 3108, PRINCETON, NJ 08540

ASB 002 1132

ASBESTOS IN SEDIMENT

ASB 002 1133

PRINCETON TESTING LABORATORY INC.
P.O. BOX 3108
PRINCETON, N.J. 08540
609-452-9050

JOB # 86111624				
SAMPLE I.D. 1624-4,5,6		4. SED #1	5. SED #2	6. SED #4
DATE OF REPORT 9-25-86				
Analytical Method (enter number)	1. PLM 2. PLM with dispersion staining 3. PLM + X-ray diffraction	1	1	1
Gross Sample Appearance	Is the sample homogeneous?	No	No	No
	Is the sample hetergeneous?	Yes	Yes	Yes
	Is the sample fibrous?	Yes	Yes	Yes
	Other			
Sample Treatment (enter number)	1. None 2. Homogenized 3. Other, specify	2	2	2
Does the Sample Contain Any Asbestos Fibers?		No	No	No
Asbestos Present (enter number and percent)	1. Amosite 2. Chrysotile 3. Crocidolite 4. Other, specify	---	---	---
Total Percent Asbestos Present in Sample		---	---	---
Other Fibrous Materials Present (enter number and percent)	1. Fibrous glass 2. Cellulose 3. Other, specify	2. 1%	---	2. 1-3%
Nonfibrous Materials Present (description and percent)		soil quartz silicates other	soil quartz silicates other	silicates other

F.C. NART 1624 Job# 86H 1624

CHAIN OF CUSTODY RECORD

PROJECT #: 1608 PROJECT NAME: Willington/LWET

SAMPLERS SIGNATURE: [illegible]

STAT. #	DATE	TIME			STATION LOCATION	SOLIDS		ASBESTOS	MERCURY	METALS	CYANIDES	ASBESTOS	ORGANICS (VOAS)	BASE/NEUTRAL	VOLATILE ORGANICS	PESTICIDES & PCB's	BACTERIOLOGY	MISC. CHEM.		REMARKS
Sed-1	9/10				✓			✓												
Sed 2	9/10				✓			✓												
Sed 4	9/10				✓			✓												
Sed-5	9/11				✓			✓												
Sed-6	9/11				✓			✓												
Sed-7	9/11				✓			✓												

All sediment samples

SAMPLES RECEIVED: HOW MANY CONTAINERS? 6 ~~12~~ 6 Soils

Relinquished by: (signature)	Date/time	Received by: (signature)	Relinquished by: (signature)	Date/Time	Rec'd by: (signature)
[illegible]	9/11/86 6:20pm	[illegible]	[illegible]	9/12/86 [illegible]	[illegible]
Relinquished by:	Date/time	Received by: (Signature)	Relinquished by: (Signature)	Date/Time	Rec'd by: (signature)
Relinquished by: (Signature)	Date/Time	Rec'd for laboratory by (signature):	Date/Time	REMARKS:	

PRINCETON TESTING LABORATORY, PO BOX 3108, PRINCETON, NJ 08540

ASB 002 1135

ASBESTOS IN GROUNDWATER

ASB 002 1136

Princeton Service Center
U.S. Route 1
609-452-9050
TLX 84-3492

princeton testing laboratory

Member

November 17, 1986

TO: Fred C. Hart Associates
530 5th Ave
New York, NY 10036

ATTENTION: Francine Barker

JOB #: 86H1899

LOCATION: ---

ANALYSIS REQUESTED: Asbestos in water

PROCEDURE OUTLINED:

An aliquot of 100 ml sample water was filtered through a 47 mm Metricel GN-6 Membrane (0.45 micron pore size). An aliquot of deionized water was used as blank. 2.06 micrograms of asbestos (chrysotile) was spiked into both blank and sample water for comparison. The filters were dried in a vacuum dessicator and analyzed by NIOSH Method P & CAM 239 (asbestos fibers in air) using phase contrast microscopy.

RESULTS:

	Asbestos fibers (>5 microns) per liter
3503 Well 907	< 100,000
2279 Well 903	< 100,000
2814 Well 904	< 100,000
3501 Well 902	< 100,000
2323 Well 901	< 100,000
3505 Well 906	< 100,000
2281 Well 908	< 100,000
2326 WB 2	< 100,000
2325 WB 3	< 100,000
2346 GS 4	< 100,000
2825 GS 3	120,000
2329 GS 2	130,000
2278 MW 905	< 100,000
2823 GS 5	< 100,000
2357 GS 11	< 100,000
2328 NV 3	< 100,000

(continued)

[redacted]

Do analysis for Asbestos by PCM Meth

CHAIN OF CUSTODY RECORD

CLIENT Fred C. Hart Assoc

JOB No. 0005-00-P3001-24

SAMPLE IDENTIFICATION

	Sample No.	Sample Description	Condition	Comments
[illegible]	3507	Well 907	Good	PCM
[illegible]	2279	Well 903		PCM
[illegible]	2214	Well 904		
[illegible]	3501	Well 902		
[illegible]	2323	Well 901		
[illegible]	3505	Well 906		
[illegible]	2221	Well 908		
[illegible]	2326	WB-2		
[illegible]	2325	WB-3	↓	↓

CHAIN OF CUSTODY CHRONICLE:

COLLECTED BY:

1 NAME: [illegible] DATE: 10/17/86

SIGNATURE: [illegible] SEALS PLACED ON CONTAINERS? ☐ YES ☐ NO Some

CUSTODY TRANSFERRED TO:

2 NAME: _____ DATE: _____ TIME: _____

SIGNATURE: _____ ARE SEALS INTACT? ☐ YES ☐ NO ☐ N/A

CUSTODY TRANSFERRED TO:

3 NAME: _____ DATE: _____ TIME: _____

SIGNATURE: _____ ARE SEALS INTACT? ☐ YES ☐ NO ☐ N/A

RECEIVED IN LABORATORY BY:

4 NAME: _____ DATE: _____ TIME: _____

SIGNATURE: _____ ARE SEALS INTACT? ☐ YES ☐ NO ☐ N/A

WERE ANY SAMPLES SPLIT WITH ANOTHER PARTY? ☐ YES ☐ NO

IF YES, IDENTIFY _____

ASB 002 1138

CHAIN OF CUSTODY RECORD

CLIENT Earl C. Hart Assoc.

JOB No. [illegible]-00-[illegible]-24

SAMPLE IDENTIFICATION

Sample No.	Sample Description	Condition	Comments
2346	GS-4	Good	PCM
909	FB-1		PCM
2325	GS-3		
2327	GS-2		
2278	MW-905		
2323	GS-5		
2357	GS-11		
2328	NV-3		
2280	NV-1	✓	✓

CHAIN OF CUSTODY CHRONICLE:

COLLECTED BY:

1 NAME: Gavin Levy DATE: 10/17/86

SIGNATURE: [signature] SEALS PLACED ON CONTAINERS? ☐ YES Some ☐ NO

CUSTODY TRANSFERRED TO:

2 NAME: _____ DATE: _____ TIME: _____

SIGNATURE: _____ ARE SEALS INTACT? ☐ YES ☐ NO ☐ N/A

CUSTODY TRANSFERRED TO:

3 NAME: _____ DATE: _____ TIME: _____

SIGNATURE: _____ ARE SEALS INTACT? ☐ YES ☐ NO ☐ N/A

RECEIVED IN LABORATORY BY

4 NAME: _____ DATE: _____ TIME: _____

SIGNATURE: _____ ARE SEALS INTACT? ☐ YES ☐ NO ☐ N/A

WERE ANY SAMPLES SPLIT WITH ANOTHER PARTY? ☐ YES ☐ NO

IF YES, IDENTIFY _____

ASB 002 1139

APPENDIX H

AQUATIC BIOTA SURVEY

RAW DATA

ASB 002 1140

Site #1 - 62 species

Division Cyanobacteria
- Lyngbya sp. A
- Lyngbya sp. B
- Oscillatoria sp.

Division Chrysophyta
- Mallomonas sp.

Division Bacillariophyta
- Melosira sp.
- Fragilaria sp. U
- Fragilaria sp. 150u
- Synedra ulna
- Navicula sp. 20u
- Navicula sp. 30u
- Navicula sp. 60u
- * Navicula sp. 90u
- Pleurosigma sp.
- Nitzschia sp.
- * Surirella sp.
- Surirella sp. 1
- Surirella sp. 2

Division Chlorophyta
- Chlorophyte (filamentous) #10 12A
- Schroederia setigera
- Treubaria sp. 1
- Closteriopsis longissima
- Scenedesmus sp. 4
- Closterium sp. #18 5A
- Closterium sp. #19 6A
- Closterium sp. #30 12A

Division Euglenophyta
- Euglena sp. #27 12A
- Trachelomonas sp. #1 4A
- Trachelomonas sp. #16 12A
- Trachelomonas sp. #26 1A
- Trachelomonas sp. #27 1A
- Trachelomonas volvocina (?)
- Phacus sp. #2 12A

Division Bryophyta
- Fissidens sp. (Water Moss)

Division Anthophyta
- Vallisneria americana (Tape Grass)
- Peltandra virginica (Arrow Arum)

KEY: Stars (*,**,***,****) indicate increasing abundance from background presence.

Site #1 - continued

Phylum Protozoa
Arcella vulgaris

Phylum Platyhelminthes
Cura foremani

Phylum Rotifera
Ploimid (Rotifer) sp.
Ploimid (Rotifer) sp.
Ploimid (Rotifer) sp.

Phylum Nematoda
Nematodes

Phylum Annelida
Oligochaete sp. 4
Lumbricidaen

Phylum Mollusca
Class Gastropoda
** Amnicola limnosa (Tiny River Snail)
Lymnaea auricularia (Ear Shaped Pond Snail)
Ferrisia fusca (Freshwater Limpet)
Pupillid (Snail)

Phylum Arthropoda
Thrombidiform (Water Mite)
Ostracod sp. 1
Asellus sp. (Isopod)
Gammarus fasciatus (Amphipod)
Diplopod (Millipede)
Class Insecta
** Ephemeropteran (Mayfly) larvae
Plecopteran (Stonefly) larvae sp. 1
Plecopteran (Stonefly) larvae sp. 2
Aphid
Coleopteran (Beetle) larvae
Tricopteran (Caddis Fly) larvae
Ryacophila sp. (Caddis Fly) larvae
Simuliidaen (Black Fly) larvae
** Chirinomidaen (Midge) larvae sp. 1
Chirinomidaen (Midge) larvae sp. 2

KEY: Stars (*,**,***,****) indicate increasing abundance from background presence.

ASB 002 1142

Site #2 - 36 species

Division Cyanobacteria
- Oscillatoria sp.

Division Bacillariophyta
- Melosira sp.
- Fragilaria sp. U
- Synedra ulna
- Navicula sp. 30u
- Navicula sp. 70u
- Navicula sp. 90u
- Navicula sp. #22 12A
- Pleurosigma sp.
- Surirella sp. U
- Surirella sp. 2

Division Chlorophyta
- Treubaria sp. 1

Division Euglenophyta
- Euglena sp. #3 5A
- Euglena sp. #27 12A
- Trachelomonas sp. #24 12A
- Phacus sp. #2 12A
- Phacus longicauda

Division Anthophyta
- Peltandra virginica (Arrow Arum)
- Lemna minor (Lesser Duckweed)
- Wolffia columbiana (Watermeal)

Phylum Protozoa
- Arcella vulgaris

Phylum Platyhelminthes
- Cura foremani

Phylum Nematoda
- Nematodes - 2 sp.

Phylum Annelida
- Oligochaete sp. 1
- Oligochaete sp. 3

Phylum Mollusca
- Class Gastropoda
  - Lymnaea auricularia (Ear Shaped Pond Snail)
- Class Bivalvia
  - Sphaerium rhomboideum (Fingernail Clam)

KEY: Stars (*,**,***,****) indicate increasing abundance from background presence.

Site #2 - continued

Phylum Arthropoda
- Copepod
- Gammarus fasciatus (Amphipod)

Class Insecta
- Ephemeropteran (Mayfly) larvae
- Gerridaen (Water Strider)
- Aphid
- Tricopteran (Caddis Fly) larvae
- Chirinomidaen (Midge) larvae sp. 1

Phylum Ectoprocta
- Ectoproct statoblast

KEY: Stars (*,**,***,****) indicate increasing abundance from background presence.

ASB 002 1144

APPENDIX I

ENDANGERMENT ASSESSMENT CALCULATIONS

ASB 002 1145

BY NJD DATE 3/24/88	FRED C. HART ASSOCIATES, INC.	SHEET ___ OF ___	1 PAGE
CHK'D _____ DATE _____			

SUBJECT Risk Characterization Calculations for the Ingestion of Contaminated Surface Soils JOB NO

Arsenic

Child MPC

conc. am't ingested abs. Coeff days/life ex Coeff

$$LADD = \frac{(74\ mg/kg)(0.00005\ kg/day)(1)(3.25\ days)(5\ yrs)(0.10)}{(365)(70)(35)}$$

$$LADD = \frac{0.000603}{894250} = \frac{6.013E-04}{8.9425E+05}$$

$$= 0.672E-09$$

$$Risk = LADD \times UCR$$

$$= (6.72E-10)(15)$$

$$= 100.8E-10 = 1.01E-08$$

MPC-Adult

$$LADD = \frac{(7.4)(0.00045)(1)(4.06)(5)(0.10)}{(365)(70)(70)}$$

$$Risk = LADD \times UCR$$

$$= \frac{0.0072106}{128500} \times 15$$

$$Risk = 6.0475E-08$$

$$= 6.05E-08$$

ASB 002 1146

BY NJD DATE 2/26/85	FRED C. HART ASSOCIATES, INC.	SHEET 2 OF PAGE
CHK'D DATE		

SUBJECT JOB NO

Arsenic

RWC - Child

$$LADD = \frac{(7.4\ mg/kg)(0.00005)(1)(7.5)(7)(0.10)}{(365)(70)(35)}$$

$$Risk = LADD \times UCR = \frac{0.0019425}{894250} \times 15$$

$$Risk = 3.258\ E-08$$
$$= 3.26\ E-08$$

RWC - Adult

$$LADD = \frac{(7.4)(0.00045)(1)(30)(10)(0.10)}{(365)(70)(70)}$$

$$Risk = LADD \times UCR$$

$$= \frac{0.028416}{1758500} \times 15$$

$$= 2.0E-07$$

ASB 002 1147

BY NSD DATE 2/26/86 | FRED C. HART ASSOCIATES, INC. | SHEET 3 OF ___ PAGE

CHK'D _____ DATE _____

SUBJECT _____ JOB NO _____

Bis(2-ethylhexyl) phthalate (DEHP)

MPC - Child

$$LADD = \frac{(0.62)(0.00005)(1)(3.25)(0.10)(5)}{(365)(70)(35)}$$

$$Risk = LADD \times UCR$$

$$= \frac{0.0000504}{894,250} \times 0.000684$$

$$Risk = 3.855E-14$$

$$= 3.86E-14$$

MPC - Adult

$$LADD = \frac{(0.62)(0.00048)(1)(4.06)(5)(0.10)}{(365)(70)(70)}$$

$$= \frac{0.0006041}{1788500} = 3.378E-10$$

$$Risk = LADD \times UCR$$

$$= (3.38E-10)(0.00684)$$

6.84E-03

$$= 23.12E\ E-13$$

$$= 2.31E\ E-12$$

ASB 002 1148

BY NJD DATE 3/26/88 | FRED C. HART ASSOCIATES, INC. | SHEET 4 OF ___ PAGE

CHK'D _____ DATE _____

SUBJECT _____ JOB NO _____

Bis (2-ethylhexyl) phthalate (DEHP)

RWC - Child

$$LADD = \frac{(0.62)(0.00005)(1)(7.5)(7)(0.10)}{(365)(70)(35)}$$

Risk = LADD x UCR

$$= \frac{0.0001628}{594,250} \times 0.000684$$

Risk = 1.82E-10

RWC - Adult

$$LADD = \frac{(0.62)(0.00005)(1)(8)(10)(0.10)}{(365)(70)(70)}$$

Risk = LADD x UCR

$$= \frac{0.0023808}{1785200} \times 0.000684$$

= 9.11E-13

ASB 002 1149

BY NJD DATE 2/26/88 | FRED C. HART ASSOCIATES, INC. | SHEET 5 OF ___ PAGE

CHK'D _____ DATE _____

SUBJECT _____ JOB NO _____

Mercury

MPC-Child

$$MDD = \frac{(0.9\,mg/kg)(0.00005\,kg)(1)(0.10)}{35\,kg}$$

conc, amount ingested, abs coeff, exp coeff

$$Risk = \frac{MDD}{ADI} = \frac{1.0E-07}{0.003}$$

$$= 4.29\,E-04$$

MPC-Adult

$$MDD = \frac{(0.9)(0.00048)(1)(0.10)}{70}$$

$$= 6.2\,E-07$$

$$Risk = \frac{MDD}{ADI} = \frac{6.2E-07}{3.0\,E-04}$$

$$= 2.07\,E-03$$

ASB 002 1150

BY NJD DATE 2/26/85 | FRED C. HART ASSOCIATES, INC. | SHEET 6 OF PAGE

CHK'D DATE

SUBJECT JOB NO

Mercury

RWC-Child

$$MDD = \frac{(1.7\ mg/day)(0.00005\ kg)(1)(0.10)}{35\ kg}$$

$$Risk = \frac{2.4E-07}{3.0E-04} = 0.80E-03 = 8.0E-04$$

RWC-Adult

$$MDD = \frac{(1.7\ mg/kg)(0.00048)(1)(0.10)}{70\ kg}$$

$$Risk = \frac{MDD}{ADI} = \frac{0.0000017}{0.0003} = \frac{1.17E-06}{3.0E-04}$$

$$Risk = 0.39E-02$$

$$= 3.9E-03$$

ASB 002 1151

Nickel

MPC - Child

$$MDD = \frac{(43.6\ mg/kg)(0.00005\ kg)(1)(0.10)}{35\ kg}$$

$$= 0.623\ E-05$$

$$= 6.23\ E-06$$

$$\frac{MDD}{ADI} = \frac{6.23E-06}{1.00E-02}$$

$$= 6.23E-04$$

MPC - Adult

$$MDD = \frac{(43.6\ mg/kg)(0.00048)(1)(0.10)}{70}$$

$$= 2.99\ E-05$$

$$Risk - \frac{MDD}{ADI} = \frac{2.99E-05}{1.00\ E-02}$$

$$= 2.99E-03$$

BY NJD DATE 2/26/88 | FRED C. HART ASSOCIATES, INC. | SHEET ___ OF ___ | 8 PAGE

CHK'D _____ DATE _____

SUBJECT _____ JOB NO _____

Nickel

RWC - Child

$$MDD = \frac{(51.5\,mg/kg)(0.00005)(1)(0.10)}{35\,kg}$$

$$Risk = \frac{MDD}{ADI} = \frac{7.36E-05}{1.00E-02}$$

$$Risk = 7.36E-04$$

RWC - Adult

$$MDD = \frac{(51.6\,mg/kg)(0.00048)(1)(0.10)}{70\,kg}$$

$$Risk = \frac{MDD}{ADI} = \frac{3.54E-05}{1.00E-02}$$

$$Risk = 3.54E-03$$

ASB 002 1153

BY LJD DATE 2/26/88 | FRED C. HART ASSOCIATES, INC. | SHEET ___ OF ___ PAGE 14

CHK'D _____ DATE _____

SUBJECT Risk Characterization JOB NO _____

Calculations for the Ingestion of Contaminated Fish

Cadmium (noncarcinogen)

MPC + RWC

$$MDD = (0.563\ mg/l)(81\ l/kg)(0.000463\ kg\ fish/kg/day)$$

conc bcf ingestion

$$= 2.11\ E{-02}\ mg/kg/day$$

$$Risk = \frac{MDD}{ADI} = \frac{2.11\ E{-02}}{2.90\ E{-04}}$$

$$= 0.728\ E{+02}$$

$$= 7.28\ E{+01}$$

ASB 002 1154

BY NJD DATE 2/26/85 | FRED C. HART ASSOCIATES, INC. | SHEET ___ OF ___ 2 PAGE

CHK'D _____ DATE _____

SUBJECT _____ JOB NO _____

Nickel (noncarcinogen)
MPC

$MDD = (0.065\ mg/l)(47\ l/kg)(0.000463\ kg\ fish/kg/day)$

$Risk = \frac{MDD}{ADI} = \frac{0.0014145\ mg/kg/day}{0.01\ mg/kg/day}$

$= \frac{1.41E-03}{1.00E-02} = 1.41E-01$

Nickel RWC

$MDD = (0.084\ mg/l)(47\ l/kg)(0.000463\ kg\ fish/kg/day)$

$Risk = \frac{MDD}{ADI} = \frac{1.83E-03}{1.00E-02} = 1.83E-01$

ASB 002 1155

BY NJD DATE 2/26/88 | FRED C. HART ASSOCIATES, INC. | SHEET ___ OF ___ 3 PAGE

CHK'D _____ DATE _____

SUBJECT _____ JOB NO _____

Bis(2-ethylhexyl)phthalate (noncarcinogen) DEHA

MPC x RNC

Noncarcinogen

MDD = (0.110 mg/l)(130 l/kg)(0.000463 kg fish/kg day)

MDD = 0.0066209 mg/kg/day

$$Risk = \frac{MDD}{ADI} = \frac{6.6209E-03}{2.00E-02} = 3.31E-01$$

DEHP Carcinogen

LADD = Conc. x bcf x human intake factor

$$= (0.110\ mg/l)(130\ l/kg)\left(0.000463\ \frac{kg\ fish}{kg\ day}\right)$$

LADD = ~~0.2~~ 6.6209E-03

Risk = LADD x UCR

= (6.6209E-03)(6.84E-04)

= 4.529 E-07

= 4.53E-06

ASB 002 1156

BY NJD DATE 2/25/88	FRED C. HART ASSOCIATES, INC.	SHEET ___ OF ___	5 PAGE
CHK'D AL DATE 02-26-88			

SUBJECT Risk Characterization Calculations for Direct Contact with Surface Water JOB NO

DEHP - MDC - Child

$$LADD = \frac{(0.11)(94.0)(2.0E-6)(0.01)(0.10)(6.5)(5)}{(365)(70)(35)}$$

$$LADD = \frac{7.0E-07}{5.9425E+05} = 7.83E-13$$

RISK = LADD × UCR

RISK = (7.83E-13)(15)

1.17E-11

DEHP - MDC - Adult

$$LADD = \frac{(0.11)(131.5)(2.0E-06)(0.01)(0.10)(6.5)(35)}{(365)(70)(70)}$$

$$LADD = \frac{9.1E-06}{1.7885E+06} =$$

RISK = LADD × UCR

RISK = (5.09E-12)(15) = 76.34E-12

= 7.63E-11

ASB 002 1157

BY N.D. DATE 2/25/88	FRED C. HART ASSOCIATES, INC.	SHEET 4 OF PAGE
CHK'D AL DATE 02-26-88		

SUBJECT _____ JOB NO _____

DEHP - RWC - Child

$$LADD = \frac{(0.11)(94)(2E-06)(0.10)(0.10)(22.5)(5)}{(365)(70)(35)}$$

abs. exp

$$LADD = \frac{2.33E-05}{8.9425E+05}$$

Risk = LADD × UCR

Risk = (2.61E-11)(15)

= 39.15E-11

= 3.92E-10

DEHP RWC - Adult

$$LADD = \frac{(0.11)(181.5)(2E-06)(0.10)(0.10)(22.5)(35)}{(365)(70)(70)}$$

$$LADD = \frac{3.14E-04}{1.7885E+02}$$

Risk = LADD × UCR

Risk = (1.76E-10)(15)

= 26.33E-10

= 2.63E-9

ASB 002 1158

BY N.D. DATE 2/25/88
CHK'D AL DATE 02-26-88

FRED C. HART ASSOCIATES, INC.

SHEET 5 OF PAGE

SUBJECT JOB NO

Cadmium - MDC - Child

$$MDD = \frac{(\text{Conc})(\text{Surface area})(\text{Water/area})(\text{abs coeff})(\text{exp coeff})}{35\ \text{kg}}$$

35 kg: body weight

$MDD = 3.02E-09$

$$Risk = \frac{MDD}{ADI} = \frac{3.02E-09}{0.00029\ \text{mg/kg/day}}$$

$Risk = 1.04E-05$

Cadmium - ~~[illegible]~~ MDC - Adult

$$MDD = \frac{(0.563)(181.5)(2.0E-06)(0.01)(0.10)}{70\ \text{kg}}$$

$MDD = 2.92E-09$

$$Risk = \frac{MDD}{ADI} = \frac{2.92E-09}{0.00029\ \text{mg/kg/day}}$$

$Risk = 1.01E-05$

ASB 002 1159

BY [illegible] DATE 2/26/88	FRED C. HART ASSOCIATES, INC.	SHEET ___ OF ___	6 PAGE
CHK'D AL DATE 02-26-88			

SUBJECT _____ JOB NO _____

Cadmium - RWC - Child

$$MDD = \frac{(0.563)(94.0)(2.0E-06)(0.10)(0.10)}{35 \text{ Kg}}$$

$$MDD = 3.024E-08$$

$$RSK = \frac{MDD}{ADI} = \frac{3.24 E-08}{0.00029 \text{ mg/Kg/day}}$$

$$Risk = 1.043 E-04$$

$$= 1.04 E-04$$

Cadmium - RWC - Adult

$$MDD = \frac{(0.563)(131.5)(2.0E-06)(0.10)(0.10)}{70 \text{ Kg}}$$

$$MDD = 2.92E-08$$

$$RISK = \frac{MDD}{ADI} = \frac{2.92E-08}{0.00029 \text{ mg/Kg/day}}$$

$$Risk = 1.01 E-04$$

ASB 002 1160

BY N.D. DATE 3/26/88	FRED C. HART ASSOCIATES, INC.	SHEET ___ OF ___	7 PAGE
CHK'D AL DATE 02-26-88			

SUBJECT _____ JOB NO _____

Nickel MPC- child

$$MDD = \frac{(0.065)(94)(2.0E-06)(0.01)(0.10)}{35\ kg}$$

abs coeff ent coeff

$$MDD = 3.49E-10$$

$$Risk = \frac{MDD}{ADI} = \frac{3.49E-10}{1.00E-02\ mg/kg/day}$$

$$Risk = 3.49E-08$$

Nickel MPC- Adult

$$MDD = \frac{(0.065)(151.5)(2.0E-06)(0.01)(0.10)}{70\ kg}$$

$$MDD = 3.37E-10$$

$$Risk = \frac{MDD}{ADI} = \frac{3.37E-10}{1.00E-02\ mg/kg/day}$$

$$Risk = 3.37E-08$$

ASB 002 1161

BY N.D. DATE 2/24/88
CHK'D AL DATE 02-26-88

FRED C. HART ASSOCIATES, INC.

SHEET ___ OF ___ 8 PAGE

SUBJECT _____ JOB NO _____

Nickel RWC - Child

abs coeff exp coeff

$$MDD = \frac{(0.054)(94)(2E-06)(0.10)(0.10)}{35\ kg}$$

$$MDD = 4.51E-09$$

$$Risk = \frac{MDD}{ADI} = \frac{4.51E-09}{1.00E-02\ mg/kg/day}$$

$$Risk = 4.51E-07$$

Nickel RWC - Adult

$$MDD = \frac{(0.054)(181.5)(2E-06)(0.10)(0.10)}{70}$$

$$MDD = \cancel{1.35E-13}\ 4.356E-09$$

$$Risk = \frac{MDD}{ADI} = \frac{\cancel{4.35E-13}\ 4.356E-09}{1.00E-02\ mg/kg/day}$$

$$Risk = \cancel{1.33E-11}$$

$$4.36E-07$$

ASB 002 1162

BY NJD DATE 2/22/88
CHK'D AL DATE 02-26-88

FRED C. HART ASSOCIATES, INC.

SHEET 9 OF PAGE

SUBJECT _____ JOB NO _____

DEHP (noncarcinogen)

MPC - Child

$$MDD = \frac{(0.110)(94)(2E-06)(0.01)(0.10)}{35\ kg}$$

(0.01: abs coeff; 0.10: exp conc)

$MDD = 5.91\ E-10$

$$Risk = \frac{MDD}{ADI} = \frac{5.91\ E-10}{2.00\ E-02\ mg/kg/day}$$

$Risk = 2.95\ E-08$ 2.95E-08

MPC - Adult

$$MDD = \frac{(0.110)(18.5)(2E-06)(0.01)(0.10)}{70\ kg}$$

$MDD = 5.70\ E-10$

$$Risk = \frac{MDD}{ADI} = \frac{5.70\ E-10}{2.00\ E-02}$$

$Risk = 2.85\ E-08$

ASB 002 1163

BY ND DATE 2/26/88 | FRED C. HART ASSOCIATES, INC. | SHEET ___ OF ___ 10 PAGE

CHK'D AL DATE 02-26-88

SUBJECT _____ JOB NO _____

DEHP (non carcinogen)

RWC - Child

$$MDD = \frac{(0.110)(94)(2E-06)(0.10)(0.10)}{35\ kg}$$

(0.10: Qbs Coeff; 0.10: TxQ Coeff)

$MDD = 5.91E-09$

$$Risk = \frac{MDD}{ADI} = \frac{5.91E-09}{2.00E-02\ mg/kg/day}$$

$Risk = 2.95E-07$

RWC - Adult

$$MDD = \frac{(0.110)(181.5)(2E-06)(0.10)(0.10)}{70\ kg}$$

$MDD = 5.70E-09$

$$Risk = \frac{MDD}{ADI} = \frac{5.70E-09}{2.00E-02\ mg/kg/day}$$

$Risk = 2.85E-07$

ASB 002 1164