CV
NATOPS MANUAL

**THIS PUBLICATION SUPERSEDES NAVAIR 00-80T-105,
DATED 15 JUNE 2015.**

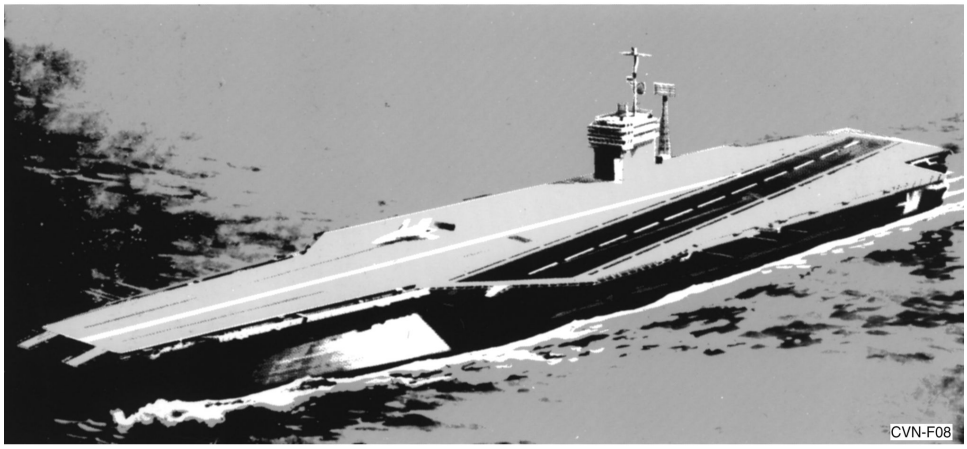

DISTRIBUTION STATEMENT C — Distribution authorized to U.S. Government agencies only and their contractors to protect publications required for official use or for administrative or operational purposes only (15 February 2021). Other requests for this document shall be referred to COMNAVAIRFOR NATOPS Program Administrator (N455), NAS North Island, CA 92135-7051.

DESTRUCTION NOTICE — For unclassified, limited documents, destroy by any method that will prevent disclosure of contents or reconstruction of the document.

ISSUED BY AUTHORITY OF THE CHIEF OF NAVAL OPERATIONS AND UNDER THE DIRECTION OF THE COMMANDER, NAVAL AIR SYSTEMS COMMAND.

DEPARTMENT OF THE NAVY
NAVAL AIR SYSTEMS COMMAND
RADM WILLIAM A. MOFFETT BUILDING
47123 BUSE ROAD, BLDG 2272
PATUXENT RIVER, MARYLAND 20670-1547

LETTER OF PROMULGATION

1. The Naval Air Training and Operating Procedures Standardization (NATOPS) Program is a positive approach toward improving combat readiness and achieving a substantial reduction in the aircraft mishap rate. Standardization, based on professional knowledge and experience, provides the basis for development of an efficient and sound operational procedure. The standardization program is not planned to stifle individual initiative, but rather to aid the Commanding Officer in increasing the unit's combat potential without reducing command prestige or responsibility.

2. NATOPS products standardize ground and flight procedures but do not include tactical doctrine. Compliance with these products' requirements and procedures is mandatory except as authorized herein. In order to remain effective, NATOPS must be dynamic and stimulate rather than suppress individual thinking. Since aviation is a continuing, progressive profession, it is both desirable and necessary that new ideas and new techniques be expeditiously evaluated and incorporated if proven to be sound. To this end, Commanding Officers of aviation units are authorized to modify procedures contained herein, in accordance with the waiver provisions established by OPNAV Instruction 3710.7, for the purpose of assessing new ideas prior to initiating recommendations for permanent changes. This product is prepared and kept current by the users in order to achieve maximum readiness and safety in the most efficient and economical manner. All change recommendations should be submitted to Naval Air Systems Command (NAVAIR) Airworthiness and CYBERSAFE Directorate (AIR 4.0P) via the Airworthiness website. Should conflict exist between the training and operating procedures found in this product and those found in other publications, this product will govern.

3. Per NAVAIRINST 13034.1 series, this flight clearance product provides NAVAIR airworthiness certification subsequent to design engineering review. It does not authorize aircraft/system modification, nor does it satisfy NAVAIR requirements for configuration management. Refer to OPNAVINST 4790.2 series for policy guidance on configuration management and modification authority.

Approved

JOHN S. LEMMON
Rear Admiral, United States Navy
By direction of
Commander, Naval Air Systems Command

INTERIM CHANGE SUMMARY

The following Interim Changes have been previously incorporated into this manual.

INTERIM CHANGE NUMBER(S)	REMARKS/PURPOSE
1 Thru 46	Previously incorporated.

The following Interim Changes have been incorporated into this Change/Revision.

INTERIM CHANGE NUMBER(S)	REMARKS/PURPOSE
47	V-22 Holding Altitude/Launch and Recovery Updates
48	F-35 Weapons CONOPS

Interim Changes Outstanding — To be maintained by the custodian of this manual.

INTERIM CHANGE NUMBER(S)	ORIGINATOR/DATE (or DATE/TIME GROUP)	PAGES AFFECTED	REMARKS/PURPOSE
This manual has been transitioned to electronic format only. Interim Changes and related replacement pages will no longer be issued with updates. Updates will be provided via release of a full electronic revision posted to the Airworthiness and NATEC Websites. Refer to the Record of Changes page 7/(8 blank) for specific details of the update.			

RECORD OF CHANGES

Date of Change	Remarks/Purpose and Affected Chapter/Section/Pages
15 February 2021	Revision Including through IC 48.

LIST OF EFFECTIVE PRINTED CONTENT

CHAPTER 1	Introduction	15 FEBRUARY 2021
CHAPTER 2	Predeployment	15 FEBRUARY 2021
CHAPTER 3	Preparing for Flight Operations	15 FEBRUARY 2021
CHAPTER 4	Air Traffic Control Doctrine	15 FEBRUARY 2021
CHAPTER 5	Launching Aircraft	15 FEBRUARY 2021
CHAPTER 6	Recovering Aircraft	15 FEBRUARY 2021
CHAPTER 7	Weapons Handling Procedures	15 FEBRUARY 2021
CHAPTER 8	Helicopter Procedures	15 FEBRUARY 2021
CHAPTER 9	Tiltrotor Procedures	15 FEBRUARY 2021
APPENDIX A	Weapons Loading/Strikedown/Downloading and Recovery Guide	15 FEBRUARY 2021
APPENDIX B	Carrier Flight Deck Helicopter Operating Spots	15 FEBRUARY 2021
APPENDIX C	CV Helicopter Launch and Recovery Wind Limitations	15 FEBRUARY 2021
APPENDIX D	Jet Borne Lift Launch and Recovery Wind Limitations	15 FEBRUARY 2021

CV NATOPS MANUAL

CONTENTS

Page No.

CHAPTER 1 — INTRODUCTION

1.1 PURPOSE 1-1
1.2 SCOPE 1-1
1.3 THE CONTENTS OF THIS PUBLICATION 1-1
1.4 NATOPS PRODUCT SET 1-1
1.5 CV NATOPS PROGRAM MANAGEMENT ASSIGNMENTS 1-1
1.5.1 NATOPS Model Manager Unit 1-1
1.5.2 NATOPS Advisory Group 1-2
1.5.3 NATOPS Cognizant Command 1-2
1.6 COMMANDING OFFICERS 1-2
1.7 OTHER RELATED PUBLICATIONS 1-2
1.8 TRAINING 1-3
1.9 WAIVERS 1-3

CHAPTER 2 — PREDEPLOYMENT

2.1 TRAINING REQUIREMENTS 2-1
2.2 ADDITIONAL REQUIREMENTS 2-1
2.3 PREDEPLOYMENT LECTURE SYLLABUS 2-2
2.3.1 All Personnel 2-2
2.3.2 Plane Captains 2-2
2.3.3 Maintenance Personnel 2-2
2.3.4 Flight Crewmembers 2-2
2.3.5 Ordnance Personnel 2-3

CHAPTER 3 — PREPARING FOR FLIGHT OPERATIONS

3.1 THE AIR PLAN 3-1
3.1.1 The Ordnance Load Plan 3-2
3.2 FLIGHT QUARTER STATIONS 3-2
3.2.1 Wearing of Flight Deck Uniforms 3-2

Page No.

3.2.2 Special Clothing 3-2
3.2.3 Aqueous Film Forming Foam (AFFF) System and Mobile Firefighting Equipment 3-2
3.2.4 Preliminary Procedures — CATCC 3-2
3.2.5 Preliminary Procedures — Air Officer 3-3
3.3 BRIEFING 3-8
3.4 FLIGHT PLANS AND ADVISORIES 3-8
3.4.1 Close Proximity Operations 3-9
3.5 CHANGES IN PILOT OR AIRCRAFT ASSIGNMENTS 3-9
3.6 AIR TRANSFER OFFICER 3-9
3.7 PASSENGER TRANSFERS 3-10

CHAPTER 4 — AIR TRAFFIC CONTROL DOCTRINE

4.1 RESPONSIBILITIES 4-1
4.1.1 Operations Officer 4-1
4.1.2 Air Operations Officer 4-1
4.1.3 Air Officer 4-1
4.1.4 Landing Signal Officer 4-1
4.1.5 Landing Signalman Enlisted 4-1
4.1.6 Pilots 4-1
4.1.7 Combat Direction Center Officer 4-2
4.2 CONTROL CRITERIA 4-2
4.2.1 Degrees of Control 4-2
4.2.2 Electronic Emission Control 4-3
4.3 SEPARATION CRITERIA 4-4
4.3.1 Lateral Separation 4-4
4.3.2 Vertical Separation 4-4
4.4 COMMUNICATION CONTROL 4-5
4.4.1 Control of Radio Circuits 4-5
4.4.2 Voice Procedures 4-5
4.4.3 Recording of Radio Circuits 4-5
4.4.4 Communication Security 4-6
4.5 EMERGENCY CONTROL PROCEDURES 4-6
4.5.1 Initial Control Responsibility 4-6
4.5.2 Basic Procedures 4-6

CHAPTER 5 — LAUNCHING AIRCRAFT

5.1 PRELAUNCH PROCEDURES 5-1
5.1.1 Manning Aircraft 5-1

Page No.

5.1.2	COD/VOD Aircraft	5-1
5.2	LAUNCHING FIXED-WING AIRCRAFT	5-2
5.2.1	Engine Start and Turnup	5-2
5.2.2	Final Preparations for Launch	5-3
5.2.3	Ordnance Arming	5-3
5.3	LAUNCHING AIRCRAFT (CONVENTIONAL/ICCS DECKEDGE MODE)	5-3
5.3.1	Taxiing/Spotting Aircraft on Catapults	5-3
5.3.2	Tensioning Aircraft	5-5
5.3.3	Launch	5-7
5.3.4	Launch Complete	5-13
5.4	LAUNCHING AIRCRAFT (ICCS)	5-14
5.4.1	Taxiing/Spotting Aircraft on Catapults	5-14
5.4.2	Tensioning Aircraft	5-16
5.4.3	Launch	5-18
5.4.4	Launch Complete	5-20
5.5	NIGHT/CASE III OPERATIONS	5-21
5.6	DECK LAUNCHING	5-21
5.7	CARRIER QUALIFICATIONS	5-22
5.8	POST-LAUNCH PROCEDURES	5-22
5.8.1	Catapult Crew Debrief	5-22
5.9	EMERGENCY ACTIONS AND PROCEDURES	5-22
5.9.1	Aborting the Launch	5-23
5.9.2	SUSPEND (Conventional/Deckedge Mode)	5-23
5.9.3	SUSPEND (ICCS)	5-26
5.10	FCF LAUNCH PROCEDURES	5-30
5.11	DOWNED AND STANDBY AIRCRAFT	5-30
5.11.1	Downed Aircraft	5-30
5.11.2	Standby Aircraft	5-30
5.12	RESPOT FORWARD	5-30
5.13	EMERGENCY AFTER LAUNCH	5-30
5.13.1	Visual Meteorological Conditions	5-30
5.13.2	Night/Instrument Meteorological Conditions	5-30
5.14	ALERT AIRCRAFT REQUIREMENTS	5-30
5.14.1	Fixed Wing Condition Aircraft	5-31
5.15	CONTROL OF DEPARTING AIRCRAFT	5-32
5.15.1	Departure Radials	5-32

Page No.

5.15.2 Departure Communication Procedures 5-33
5.15.3 Fixed-Wing Departures/Rendezvous 5-34

CHAPTER 6 — RECOVERING AIRCRAFT

6.1 ARRIVAL PROCEDURES 6-1
6.1.1 Entering the Carrier Control Area 6-1
6.1.2 Arrival Information 6-1
6.2 CASE I 6-1
6.2.1 Jet/Turboprop Aircraft Port Holding/Spin Pattern 6-2
6.2.2 COD Aircraft Starboard Holding 6-2
6.2.3 VFR Day Fixed Wing Carrier Landing Pattern 6-3
6.2.4 Voice Reports 6-5
6.2.5 ZIP LIP 6-5
6.2.6 Drag 6-5
6.3 CASE II 6-6
6.4 CASE III 6-6
6.4.1 Marshal Procedures 6-6
6.4.2 Marshal Instructions 6-7
6.4.3 General Instructions 6-8
6.4.4 Departing Marshal 6-8
6.4.5 Initial Separation 6-8
6.4.6 Frequency/IFF/SIF Changes 6-9
6.4.7 Instrument Approach Procedures 6-9
6.4.8 Missed Approach/Waveoff/Bolter 6-16
6.4.9 Delta Procedures 6-16
6.4.10 Night EMCON Recovery 6-17
6.4.11 Communication or NAVAID Failure During Approach 6-17
6.4.12 Radar Handoff Procedures 6-18
6.4.13 Voice Communication Procedures 6-18
6.5 RECOVERING FIXED-WING AIRCRAFT 6-19
6.5.1 Preparation for Recovery 6-19
6.5.2 Flight Deck Procedures 6-21
6.5.3 Special Safety Precautions 6-21
6.5.4 Control of the VFR Day Fixed Wing Carrier Landing Pattern 6-23
6.6 SPECIAL PROCEDURES FOR CARRIER QUALIFICATION LANDING 6-24
6.6.1 Fixed-Wing Aircraft 6-24
6.7 EMERGENCY LANDING 6-25
6.7.1 Fixed-Wing Aircraft 6-25

Page No.

6.8 EMERGENCY SIGNALS 6-25
6.8.1 Visual Signals to Ship From Aircraft With Radio Failure 6-25
6.8.2 Visual Signals to Aircraft From Ship Under EMCON or Lost Communication Conditions 6-26
6.8.3 Carrier Pattern Emergencies 6-26
6.8.4 Day Communication Emergencies 6-26
6.8.5 Night Communication Emergencies 6-26
6.9 TANKER OPERATIONS 6-26
6.9.1 Recovery Tanker Procedures 6-26
6.9.2 Rendezvous Procedures 6-27
6.9.3 Recovery Tanking Pattern 6-34
6.9.4 Recovery (Case III) 6-34
6.9.5 Fuel Transfer and Dump Control 6-34
6.10 DIVERSION OF AIRCRAFT 6-35

CHAPTER 7 — WEAPONS HANDLING PROCEDURES

7.1 WEAPON HANDLING PROCEDURES 7-1
7.1.1 Weapon Definitions 7-1
7.1.2 Weapon Movement 7-2
7.1.3 Weapon Loading/Downloading 7-3
7.1.4 F-35C Weapons Concept of Operations 7-4
7.1.5 Arming 7-5
7.1.6 Intent to Launch Weapons 7-5
7.1.7 Hung/Unexpended Weapons 7-6
7.1.8 Dearming 7-7
7.1.9 Maintenance on Loaded Aircraft 7-8
7.1.10 Abort/Strikedown 7-9
7.1.11 Emergency Procedures 7-9

CHAPTER 8 — HELICOPTER PROCEDURES

8.1 GROUND OPERATIONS 8-1
8.1.1 Starting Engines 8-1
8.1.2 LSE/PC Calls 8-1
8.1.3 Safety Precautions 8-1
8.2 LAUNCH 8-1
8.2.1 Weather 8-1
8.2.2 Prior to Launch 8-1
8.2.3 Launch Procedures 8-2
8.2.4 Departure Procedures 8-3

		Page No.
8.2.5	Lost Communications	8-4
8.2.6	Functional Check Flights	8-4
8.2.7	Detachments	8-4
8.2.8	Safety Precautions	8-4
8.3	PLANE GUARD	8-4
8.3.1	Control Authority	8-7
8.3.2	Plane Guard Station	8-7
8.3.3	SAR Response	8-7
8.3.4	Restrictions	8-7
8.3.5	SAR Requirements	8-8
8.3.6	Helicopter Readiness Conditions	8-8
8.4	RESCUE HELICOPTER OPERATIONS	8-9
8.4.1	Rescue Helicopter Criteria	8-9
8.4.2	Rescue Helicopter Mission Information	8-9
8.5	RECOVERY	8-10
8.5.1	Transient Helicopters	8-10
8.5.2	Helicopter Holding	8-10
8.5.3	Recovery Procedures	8-10
8.5.4	Safety Precautions	8-12
8.5.5	Instrument Recoveries	8-12
8.5.6	Approach Weather Minimums	8-12
8.5.7	PALS Mode III Procedures	8-12
8.5.8	Nonprecision Approach	8-12
8.5.9	Waveoff	8-12
8.5.10	Instrument Emergencies	8-13
8.5.11	Emergency Landing	8-13
8.6	SAFETY PRECAUTIONS	8-13
8.7	HELICOPTER CARRIER QUALIFICATION LANDINGS	8-16
8.8	NIGHT OPERATIONS	8-16
8.8.1	CVN Lighting for Helicopter NVD Operations	8-16
8.8.2	NVD Aided Approaches	8-17
8.8.3	Night EMCON Procedures	8-17
8.9	ARMAMENT	8-17
8.9.1	Dearming	8-17
8.9.2	Hung Ordnance	8-18
8.9.3	Hung Dome	8-18
8.10	LOGISTICS	8-19

Page No.

8.10.1 Aircraft Configuration 8-19
8.10.2 External Cargo Limitations 8-19

CHAPTER 9 — TILTROTOR PROCEDURES

9.1 GROUND OPERATIONS 9-1
9.1.1 Starting Engines 9-1
9.1.2 LSE Calls 9-1
9.1.3 Functional Check Flights 9-1
9.2 LAUNCH/DEPARTURE 9-1
9.2.1 Weather 9-1
9.2.2 Launch Procedures 9-2
9.2.3 Departure Procedures 9-2
9.2.4 Lost Communications 9-4
9.3 RECOVERY 9-5
9.3.1 Arrival Procedures 9-5
9.3.2 Case I 9-5
9.3.3 Case II 9-7
9.3.4 Case III 9-7
9.3.5 Approach Weather Minimums 9-9
9.3.6 Nonprecision Approach 9-9
9.3.7 Waveoff 9-10
9.3.8 Instrument Emergencies 9-10
9.3.9 Emergency Landing 9-10
9.4 SAFETY PRECAUTIONS 9-10
9.5 TILTROTOR CARRIER QUALIFICATION (CQ) LANDINGS 9-12
9.6 NIGHT OPERATIONS 9-13
9.6.1 CVN Lighting for Tiltrotor NVD Operations 9-13
9.6.2 NVD Aided Approaches/Departures 9-13
9.6.3 Night EMCON Procedures 9-13
9.7 LOGISTICS 9-14
9.7.1 Aircraft Configuration 9-14
9.7.2 External Cargo Limitations 9-14

APPENDIX A — WEAPONS LOADING/STRIKEDOWN/DOWNLOADING AND RECOVERY GUIDE

A.1 PURPOSE A-1

APPENDIX B — CARRIER FLIGHT DECK HELICOPTER OPERATING SPOTS

B.1 PURPOSE B-1

Page No.

APPENDIX C — CV HELICOPTER LAUNCH AND RECOVERY WIND LIMITATIONS

C.1 PURPOSE C-1
C.2 SHIP HELICOPTER INTEROPERABILITY REFERENCE TABLE C-1
C.3 LAUNCH AND RECOVERY WIND ENVELOPE FEATURES C-1
C.4 WIND LIMIT ORIENTATION C-2
C.4.1 CVN Day/NVD V-22 STO Operations C-2
C.5 OTHER SOURCES OF HELICOPTER WIND ENVELOPES C-3
C.6 USE OF NOTES IN WIND ENVELOPES C-3
C.7 QUESTIONS AND COMMENTS ON WIND ENVELOPES C-3

APPENDIX D — JET BORNE LIFT LAUNCH AND RECOVERY WIND LIMITATIONS

D.1 PURPOSE D-1
D.2 USE OF NOTES IN WIND ENVELOPES D-1
D.3 QUESTIONS AND COMMENTS ON WIND ENVELOPES D-1

INDEX Index-1

LIST OF ILLUSTRATIONS

Page No.

CHAPTER 3 — PREPARING FOR FLIGHT OPERATIONS

Figure 3-1. Flight Deck Uniforms 3-4
Figure 3-2. Standard Signal Wands 3-7

CHAPTER 4 — AIR TRAFFIC CONTROL DOCTRINE

Figure 4-1. Basic Emergency Procedures for Communication/Navigational Equipment Failure 4-7
Figure 4-2. Lost Communication Emergency Squawks 4-8

CHAPTER 5 — LAUNCHING AIRCRAFT

Figure 5-1. Proper Positioning After Tensioning 5-12
Figure 5-2. E-2C/D Aircraft Nose-Tow Catapult Crank Assembly Handle Seating 5-13
Figure 5-3. Hand Signal Sequence for Aircraft Removal 5-28
Figure 5-4. Alert Aircraft Readiness Conditions 5-31

CHAPTER 6 — RECOVERING AIRCRAFT

Figure 6-1. VFR Day Fixed Wing Carrier Landing Pattern 6-4
Figure 6-2. Legend Chart for Aircraft Carrier Instrument Approach Procedures 6-10
Figure 6-3. Approach Chart CV-1 TACAN/JPALS 6-11
Figure 6-4. Approach Chart CV-2 TACAN/JPALS Overhead 6-12
Figure 6-5. Approach Weather Minimums 6-13
Figure 6-6. Emergency Signals to Ship From Fixed-Wing Aircraft With Radio Failure 6-27
Figure 6-7. Visual Signals to Aircraft From Ship Under EMCON or Lost Communications 6-28
Figure 6-8. Carrier Pattern Emergencies 6-29
Figure 6-9. Day Communication Emergencies 6-30
Figure 6-10. Night Communication Emergencies 6-31
Figure 6-11. Tanker Rendezvous Pattern 6-34

CHAPTER 8 — HELICOPTER PROCEDURES

Figure 8-1. Helicopter Restrictions During Fixed-Wing Launch/Recovery 8-3
Figure 8-2. Starboard Delta Pattern 8-5
Figure 8-3. Approach Chart CV-3 TACAN (Helicopter) 8-6
Figure 8-4. Emergency Signals to Ship from Helicopter with Radio Failure 8-7
Figure 8-5. Minimum SAR Requirements 8-8
Figure 8-6. Recommended Deck Lighting Configuration for Helicopter NVD Aided Takeoff/Landing 8-16

CHAPTER 9 — TILTROTOR PROCEDURES

Figure 9-1. Emergency Signals from Tiltrotor to Ship with Radio Failure 9-4

Page No.

Figure 9-2. Emergency Signals from Ship to Tiltrotor with Radio Failure 9-4
Figure 9-3. VFR Day Tiltrotor Carrier Landing Pattern 9-7
Figure 9-4. CASE III/Waveoff Pattern 9-10
Figure 9-5. Recommended Deck Lighting Configuration for Tiltrotor NVD Aided Takeoff/Landing 9-13

APPENDIX A — WEAPONS LOADING/STRIKEDOWN/DOWNLOADING AND RECOVERY GUIDE

Figure A-1. Weapons Loading/Strikedown/Downloading and Recovery Guide A-1

APPENDIX B — CARRIER FLIGHT DECK HELICOPTER OPERATING SPOTS

Figure B-1. CVN 68–77 Helicopter Operating Spots with Precision H-60 Spots B-2
Figure B-2. AV-8B/TAV-8B Typical Deck Marking Arrangement CV/CVN Type Ship B-3
Figure B-3. CVN 68–77 Tiltrotor Operating Spots B-4

APPENDIX C — CV HELICOPTER LAUNCH AND RECOVERY WIND LIMITATIONS

Figure C-1. Ship-Helicopter Interoperability Reference Table (SHIRT) for CV/CVN C-3
Figure C-2. CVN Common Launch and Recovery Envelope C-4
Figure C-3. H-47 Launch and Recovery Envelope for CVN 68−77 Angle Spots (with precision H-60 spots) C-5
Figure C-4. H-53 Launch and Recovery Envelopes for CVN 68−77 Spots 1 & 2 . . . . . C-6
Figure C-5. H-53 Launch and Recovery Envelopes for CVN 68−77 Spots 4, 5, 6, & 9 . . . . . C-7
Figure C-6. H-53 Launch and Recovery Envelopes for CVN 78 Spots 1 & 2 . . . . . C-8
Figure C-7. H-53 Launch and Recovery Envelopes for CVN 78 Spots 4, 5, & 6 . . . . . C-9
Figure C-8. H-53 Launch and Recovery Envelopes for CVN 78 Spot 9 . . . . . C-10
Figure C-9. H-60 Launch and Recovery Envelopes for CVN 68−77 Bow Spots 1 & 2 . . . . . C-11
Figure C-10. H-60 Launch and Recovery Envelopes for CVN 68−77 Angle Spots 3, 4, 5, 6, 8, & 9 . . . . . C-12
Figure C-11. H-60 Launch and Recovery Envelopes for CVN 68−77 Spot 7 . . . . . C-13
Figure C-12. H-60 Launch and Recovery Envelopes for CVN 78 Spots 1 & 2 . . . . . C-14
Figure C-13. H-60 Launch and Recovery Envelopes for CVN 78 Spots 3, 4, 5, & 6 . . . . . C-15
Figure C-14. H-60 Launch and Recovery Envelopes for CVN 78 Spot 7 . . . . . C-16
Figure C-15. H-60 Launch and Recovery Envelopes for CVN 78 Spot 8 . . . . . C-17
Figure C-16. H-60 Launch and Recovery Envelopes for CVN 78 Spot 9 . . . . . C-18
Figure C-17. V-22B Launch and Recovery Envelopes for CVN 68−77 Spot 6 . . . . . C-19
Figure C-18. V-22B Launch and Recovery Envelopes for CVN 68−77 Spot 6 . . . . . C-20
Figure C-19. V-22B Launch and Recovery Envelopes for CVN 68−77 Spot 9 . . . . . C-21

APPENDIX D — JET BORNE LIFT LAUNCH AND RECOVERY WIND LIMITATIONS

Figure D-1. AV-8B/TAV-8B STO Crosswind Limitations D-2
Figure D-2. AV-8B/TAV-8B CV Spot 1 VTO D-3

Page No.

Figure D-3. AV-8B/TAV-8B CV Spot 2 VTO D-4
Figure D-4. AV-8B/TAV-8B CV Spots 3 and 4 VTO D-5
Figure D-5. AV-8B/TAV-8B CV Spot 1 VL D-6
Figure D-6. AV-8B/TAV-8B CV Spot 2 VL D-7
Figure D-7. AV-8B/TAV-8B CV Spots 3 and 4 VL D-8
Figure D-8. AV-8B CV/CVN Spot 3 Night VTOL D-9

GLOSSARY

A

ACLS acquisition window. An area in space surrounding the glideslope and extended centerline of the landing area in which aircraft are acquired by the ACLS radar.

advisory control. A form of air traffic control in which the controlling agency monitors radar and radio contact with aircraft under its control and provides traffic advisories. Traffic separation is the responsibility of the individual pilot, with the assistance provided by the control agency.

air operations. That section of the operations department responsible for coordinating all matters pertaining to air operations including the proper functioning of the CATCC.

approach control. A control position in CATCC responsible for providing positive control of aircraft on approach during Case II and III. Tasks include making holes for bolter/waveoff traffic and maintaining appropriate interval.

automatic carrier landing systems (ACLS). The AN/SPN-46, also referred to as "Easy Rider," enables carrier pilots to perform instrument approaches under either manual or automatic control. The system consists of a precision tracking radar coupled to a computer and data link that provides continuous azimuth and elevation information to aircraft and shipboard controllers. The following terms are associated with ACLS: APC, AFCS, DRO, and Needles.

B

ball. A pilot report indicating that the visual landing aid is in sight.

base recovery course (BRC). The ship's magnetic heading during flight operations.

bingo. An order to proceed and land at the field specified, utilizing a bingo profile. Aircraft is considered to be in an emergency fuel situation. Bearing, distance, and destination shall be provided.

break time (ready deck). Anticipated time specified by PriFly that the deck will be ready to recover aircraft and the first aircraft of a Case II recovery is expected to be at the break.

bullseye. A term used in pilot/controller communications to refer to the AN/SPN-41.

C

carrier air traffic control center (CATCC). The operational air traffic control branch responsible to the AirOps Officer for the safe, orderly and expeditious separation of aircraft within the area of jurisdiction; and providing radar ATC services to aircraft during launch and recovery operations. Departure control, marshal control, approach control, final control, and associated status boards are components of CATCC.

carrier control area. A circular airspace within a radius of 50 nm around the carrier, extending upward from the surface to infinity, under control of CATCC except for those aircraft operating under control of the air officer during Case I and II operations. Note: The radius and height may be limited because of adjacent controlled airspace.

carrier controlled approach (CCA). An approach, executed by an aircraft, under the direction of the CATCC final controller transmitting azimuth and glidepath instructions to the pilot by radio.

carrier control zone. The airspace within a circular limit defined by 5 miles horizontal radius from the carrier, extending upward from the surface to and including 2,500 feet unless otherwise designated for special operations, and is under the cognizance of the air officer during VMC.

center. A collective radio call prefixed by a ship's code name which is used in the same manner as the shore-based counterpart.

CHARLIE. Signal for aircraft to land aboard the ship. A number suffix indicates time delay before landing.

Clara. A pilot transmission indicating the pilot does not have the visual landing aid (ball) in sight.

Clara lineup. A pilot transmission indicating the pilot does not have a usable lineup reference.

command control. Acknowledgment that aircraft being controlled by data-link signals.

concurrent operations. Sequential launch and recovery of fixed wing and rotary wing aircraft in the same cycle.

coupled. A term used in pilot/controller communications to indicate the aircraft flight control systems are engaged during final approach whereas the aircraft is conducting a hands-off approach.

D

data-link address. Discrete identification assigned to data-link equipped aircraft.

data-link equipment. Automatic transmission device capable of very high data rate.

data-link monitor (DLM). Used by the final controller to observe data being sent to aircraft under ACLS control.

DELTA. A signal given to hold and conserve fuel at an altitude and position appropriate to type aircraft and case recovery in effect.

DELTA switch. A signal given to an aircraft authorizing an airborne internal crew switch.

depart and reenter. A procedure or command to depart the landing pattern via BRC, remaining VMC and clear of all traffic, and reenter for the overhead via the initial.

departure control. A control position in CATCC responsible for aircraft departures. This position is also responsible for monitoring the location and package status of tanker aircraft; the location of lowstate aircraft and their fuel requirements.

departure reference radial (DRR). A TACAN/JPALS radial assignment by CATCC to which all squadron departure radials are referenced.

divert. An order for an aircraft to proceed and land at the field specified. Bearing, distance, and destination shall be provided.

downgrade. Term used in LSO/pilot/controller communications indicating inability to conduct or maintain the precision approach of choice and flying a less capable approach, i.e. “downgrade Mode II” from an ACLS Mode I approach or, “downgrade Manual” from a JPALS coupled approach.

E

Easy Rider. A term used in pilot/controller communications to refer to the ACLS.

eight nautical mile fix. A checkpoint on a CCA, normally located on the final bearing, 8 miles from the carrier. All jet and turboprop aircraft will pass through the 8 nm fix in level flight at an altitude of 1,200 feet, 250 KIAS, and will normally commence transition to the landing configuration.

emergency expected approach time (EEAT). The future time, assigned prior to launch, at which an aircraft is cleared to depart inbound or penetrate from a preassigned fix under lost communication conditions.

emergency marshal. A marshal established by CATCC and given to each pilot prior to launch with an altitude and an EEAT. The emergency marshal radial shall have a minimum of 30° separation from the primary marshal.

expected approach time (EAT). The future time at which an aircraft is cleared to depart inbound or penetrate from a preassigned fix. Aircraft depart and commence approach at assigned time if no further instructions are received.

F

father. Ships TACAN.

final bearing. The magnetic bearing assigned by CATCC for final approach. It is an extension of the landing area centerline.

final control. A control position in CATCC responsible for control of aircraft on final approach during Case III until transfer of control to the LSO or the aircraft reaches approach weather minimums. Approach control retains overall responsibility for separation of aircraft.

fleet area control and surveillance facility (FACSFAC). A U.S. Navy fixed, shore-based air traffic control facility. Designated to manage offshore and inland operating areas and other assigned airspace, including special use airspace. Provides joint-use scheduling and control of surface, subsurface, and airborne military platforms operating within and transiting to and from these areas. Administers services to support the coexistence of military government and non-government agencies consistent with national priorities.

flight level. Pressure altitude expressed in hundreds of feet determined by setting 29.92 in the aircraft pressure altimeter; that is, FL230 equals 23,000 feet pressure altitude.

FOX CORPEN. Ship’s true heading during flight operations.

I

instrument carrier landing system (ICLS) approach. An approach in which precise and continuous glidepath and course corrections from the AN/SPN-41 and range information from the TACAN is displayed in an aircraft enabling a manually-controlled precision approach to appropriate minimums.

inbound bearing. The magnetic heading assigned by CATCC to pilots descending directly to the carrier. It may be, but is not necessarily, the final bearing.

inbound heading. The magnetic heading assigned by CATCC that will ensure interception of the final bearing at a specific distance from the carrier.

independent landing monitor (ILM). Any landing system (AN/SPN-46, AN/SPN-41, AN/USN-3) used to backup and confirm the primary landing system glidepath and course deviation corrections.

integrated launch and recovery television system (ILARTS). A television system used to provide real-time imagery and recordings of aircraft during launch and recovery operations. It is comprised of two components: The pilot landing aid television (PLAT) system and the catapult aircraft hookup and launch (CAHAL) system.

intent to launch (ITL). A term associated with weapons, such as Harpoon/SLAM/JSOW, referring to the signal sent to activate and fire the weapon.

ITL weapon. A weapon, such as Harpoon/SLAM/JSOW, for which an intent to launch signal has been initiated and whose launch has subsequently been aborted by the aircrew or failed prior to separation of the weapon from the aircraft.

J

joint precision approach and landing system (JPALS). The AN/USN-3 also referred to as "Star Rider" is a GPS-based system using differential positioning which provides relative and precision navigation based on Global Navigation Satellite System technology. JPALS data is used in conjunction with the aircraft's own GPS measurements and attitude to compute a high integrity, precise, relative navigation vector to a touchdown point.

JPALS touchdown point (TDP). A specific point for landing on the ship provided by JPALS relative and precision navigation data.

JPALS UHF data broadcast (UDB). A one-way broadcast of JPALS data that will be used by JPALS-capable aircraft until the full two-way JPALS Data Link capability is integrated into the aircraft. The information provided will support on-deck alignment, relative navigation data required for F-35B/C to locate the ship (e.g., TACAN), and provide precision navigation data to support final approach. The JPALS UDB will not provide JPALS surveillance or precision surveillance data from JPALS-capable aircraft to the ship. During UDB flight operations, JPALS-capable aircraft are unable to conduct coupled approaches.

K

KILO report. A pilot coded report indicating aircraft mission readiness.

L

load report. A report given to marshal by the COD/VOD aircraft providing the numbers of passengers, VIP codes, mail, and cargo on board; also, any pertinent information for the CV, including fuel requirements and pilot name.

lock-on. A verbal report from the final controller when ACLS radar acquires the aircraft and commences tracking. Mode I/II equipped aircraft should receive ACL ready/lock-on discrete light.

M

manual approach. A term used in pilot/controller communications to indicate the pilot is manually using aircraft flight control systems to fly a precision approach to certified weather minimums.

marshal. A bearing, distance, and altitude fix designated by CATCC from which pilots will orient holding and from which initial approach will commence.

marshal control. A control position in CATCC responsible for providing control and arrival information to inbound aircraft until handed off to another controlling agency.

Mode I approach. A precision approach in which an aircraft is controlled automatically by the AN/SPN-46 to touchdown.

Mode IA approach. A precision approach in which an aircraft is controlled automatically by the AN/SPN-46 to 1/2 nm from the touchdown point.

Mode II approach. A precision approach in which precise and continuous position error information from the AN/SPN-46 is displayed in an aircraft enabling a manually controlled precision approach to appropriate minimum.

Mode IIT approach. A Mode II training approach in which the pilot flies a Mode II approach while being provided with Mode III approach information.

Mode III approach. A precision approach in which a pilot is supplied position guidance information from the AN/SPN-46 by a final controller enabling a manually controlled precision approach to appropriate minimums.

monitor control. The monitoring of radar and radio channels for emergency transmissions.

N

nautical mile. Defined as one minute of a degree of latitude, the length equals; 1,852 meters, 6,076.12 feet, 1.15078 statute mile. The derived unit of speed is the knot, one nautical mile per hour.

needles. The term used in pilot/controller communications to refer to the cockpit display of azimuth and elevation deviation signals from a precision approach landing system. It is referred to as a "fly to" display because the position indicators show the pilot where to fly the aircraft to.

nonprecision approach. Radar controlled approach or an approach flown by reference to navigation aids in which glideslope information is not available.

nonradar control. A form of air traffic control in which the pilot flies according to a published procedure or as prescribed by the controlling agency. Traffic separation is provided by the controlling agency, using frequent pilot position reports and modified separation criteria. This form of control is used only in case of emergency, when all shipboard air control radar is inoperative or, in the opinion of the CATCC officer, unusable.

O

operational commitment. A situation of such compelling urgency that failure to grant a deviation from established explosive safety criteria will have a deleterious impact on the mission readiness of naval forces.

P

platform. A point of 5,000 feet altitude in the approach pattern at which all jet and turboprop aircraft will decrease their rate of descent to not more than 2,000 feet per minute, continuing letdown to the 10 nm fix.

popeye. A pilot coded report indicating aircraft flying in clouds or area of reduced visibility.

port holding pattern. The Case I jet and turboprop aircraft holding pattern is a left-hand, 5-mile maximum pattern tangent to the BRC or expected BRC with the ship in the 3-o'clock position of the holding pattern. Altitude is assigned via landing order as established in ship/air wing doctrine.

positive control. A form of air traffic control in which the controlling agency has radar and radio contact with the aircraft being controlled and published approach or departure procedures are complied with, or where specific assignments regarding heading and altitude are issued by the controller. While altitude separation is provided by pilot maintaining assigned altitude, lateral and time separation is the responsibility of the air traffic controller. Speed changes may be directed by the air traffic controller.

precision approach. An approach in which azimuth, glideslope, and distance information are provided the pilot.

precision approach landing system (PALS). A suite of systems used for all weather recovery of shipboard aircraft. It may include any or all of the following: AN/SPN-46 ACLS, Link 4A Tactical Data Link Transmitter, AN/SPN-41 ICLS, and AN/USN-3 JPALS.

R

ramp time (ready deck). Anticipated time specified by PriFly that the deck will be ready to recover aircraft and the first aircraft of a Case III recovery is expected to be at the ramp.

red light. The local time at which a helicopter will no longer be SAR capable and has approximately 30 minutes of flight time remaining.

relative navigation (RelNav). Range and bearing from the ship as determined by the aircraft within the NAVAID coverage area.

retro report. A report given to COD aircraft by marshal providing offload information on passengers, mail, cargo, or any other pertinent information.

S

six nautical mile fix. A fix located on the final bearing at 6 nm from the carrier through which all jet and turboprop aircraft executing an instrument approach will pass in level flight at an altitude of 1,200 feet in landing configuration and slow to final approach speed. When necessary for traffic separation, turboprop aircraft may be instructed to commence transition to landing configuration and slow to approach speed no later than the 6 nm fix.

spin. A command directing entry into the spin pattern. The command "Spin" may be issued by either the air officer or a flight leader.

spin pattern. A left-hand pattern employed for jet and turboprop aircraft to reenter the break during Case I or Case II recoveries. The pattern will be flown at 1,200 feet oriented on the BRC or expected BRC. The pattern will not exceed a distance of 3 nm from the ship.

starboard holding pattern. A right-hand racetrack pattern between 045° and 135° relative to the BRC for COD aircraft and 045° and 110° relative to the BRC for helicopters. COD aircraft 1,000 feet or altitude assigned by CV primary (no lower than 500 feet), and helicopters 300 feet or below.

Star Rider. A term used in pilot/controller communications to refer to the JPALS.

T

ten-second discrete light. Illuminates approximately 10 seconds prior to touchdown, indicating deck motion compensation (DMC) is being transmitted from Mode I certified ships. Illuminates approximately 10 seconds prior to reaching minimums on ships certified only for Mode IA/II/IID.

three nautical mile fix. A checkpoint on a CCA on the final bearing 3 nm from the carrier through which all turboprop aircraft and helicopters will pass in a landing configuration.

U

uncoupling. Aircraft disengaged/disengaging from Autoland capabilities associated with a PALS.

universal test message (UTM). Utilized to ensure proper operation of aircraft data link equipment.

W

weather criteria. Case I weather requires the ceiling to be no lower than 3,000 feet and not less than 5 nm visibility. Case II weather requires the lowest ceiling to be 1,000 feet or above and 5 nm visibility. Case III weather is any ceiling below 1,000 feet or a visibility less than 5 nm.

Z

ZIP LIP. A condition that may be prescribed for flight operations during daylight VMC conditions under which positive communications control is waived and radio transmissions between aircraft, pilots, and control agencies are held to the minimum necessary for safety of flight. The exception is COD aircraft, unless specifically noted in the overhead message.

LIST OF ABBREVIATIONS AND ACRONYMS

A

ACHO. Aircraft handling officer.

ACL. Automatic carrier landing.

ACLS. Automatic carrier landing system (AN/SPN-46).

ADF. Automatic direction finder.

ADIZ. Air defense identification zone.

ADRL. Automatic distribution requirements list.

AEW. Airborne early warning.

AFCS. Automatic flight control system.

AFFF. Aqueous film forming foam.

AG. Arresting gear (flight deck jersey marking).

AIMD. Aircraft intermediate maintenance department.

ALRE. Aircraft launch and recovery equipment.

AOCC. Air operations control center.

APC. Approach power compensator.

ARTCC. Air route traffic control center.

ASR. Air surveillance radar.

ATC. Air traffic control.

ATCOM. Air traffic communications.

ATO. Air transfer officer.

C

CAG. Carrier air wing commander.

CAHAL. Catapult aircraft hookup and launch (system).

CAP. Combat air patrol.

CARQUAL. Carrier qualifications.

CATCC. Carrier air traffic control center.

CCA. Carrier controlled approach.

CCP. Central charging panel.

CDC. Combat direction center.

cg. Center of gravity.

CH. Channel.

CO. Commanding officer.

COD. Carrier on-board delivery.

COMM. Communications.

COMSEC. Communication security.

CPO. Chief petty officer.

CQ. Carrier qualification.

CSV. Capacity selector valve.

CV. Aircraft carrier.

CVIC. Carrier intelligence center.

CVW. Carrier air wing.

D

DAIR. Direct altitude identity readout.

DLM. Data link monitor.

DMC. Deck motion compensator.

DME. Distance measuring equipment.

DR. Dead reckoning.

DRR. Departure reference radial.

E

EAT. Expected approach time.

EEAT. Emergency expected approach time.

EMCON. Emission control.

EOD. Explosive ordnance disposal.

EOSS. Engineering operational sequencing system.

ETE. Estimated time en route.

F

FAA. Federal Aviation Administration.

FACSFAC. Fleet Area Control and Surveillance Facility.

FB. Final bearing.

FCF. Functional checkflight.

FL. Flight level.

FLIP. Flight information publication.

FLIP. Flight information publication.

FOD. Foreign object damage.

G

GCI. Ground controlled intercept.

GNSS. Global navigation satellite system.

GPS. Global positioning system.

GSE. Ground support equipment.

GW. Gross weight.

H

HAC. Helicopter aircraft commander.

HCO. Helicopter control officer.

HDC. Helicopter direction center.

HEFOE. Hydraulic electrical fuel oxygen engine (hand/light/electronic/radar aircraft emergency signals).

HERO. Hazards of electromagnetic radiation to ordnance.

HETO. Helicopter engaged turn officer.

HF. High frequency.

HIFR. Helicopter inflight refueling.

HOGE. Hover out of ground effect.

HUD. Heads-up display.

I

ICAO. International Civil Aviation Organization.

ICCS. Integrated catapult control station.

ICLS. Instrument carrier landing system.

IFF. Identification friend or foe.

IFOBRL. Inflight operable bomb rack lock.

ILARTS. Integrated launch and recovery television system.

ILM. Independent landing monitor.

IMC. Instrument meteorological conditions.

INMARSAT. International maritime satellite.

IR. Infrared.

ITL. Intent to launch.

J

JBD. Jet blast deflector.

JPALS. Joint precision approach and landing system (AN/USN-3).

JSOW. Joint standoff weapon.

K

KIAS. Knots indicated airspeed.

L

LHA. Landing assault ship.

LHD. Landing dock ship.

LOX. Liquid oxygen.

LSE. Landing signalman enlisted.

LSO. Landing signal officer.

M

MagVar. Magnetic variation.

MDA. Minimum descent altitude.

MOVLAS. Manually operated visual landing aid system.

MSL. Mean sea level.

N

NATOPS. Naval Air Training and Operating Procedures Standardization.

NAVAID. Navigation aid.

NAVAIRSYSCOM. Naval Air Systems Command.

NFO. Naval flight officer.

NGL. Nose gear launch.

nm. Nautical miles.

NORDO. No-radio.

NOTAM. Notice to airman.

NWU. Navy working uniform.

O

OGE. Out of ground effect.

OLS. Optical landing system.

OPAREA. Operating area.

OPORD. Operation order.

OTC. Officer in tactical command.

P

PAC. Pilot at the controls.

PALS. Precision approach landing system.

PASE. Preloaded accessory suspension equipment.

PG. Plane guard.

PIM. Position and intended movement.

PLAT. Pilot landing and approach television.

POCL. Payed out cable length.

POTS. Plain old telephone system.

PQS. Personnel qualification standards.

PriFly. Primary flight control.

Q

QA. Quality Assurance.

R

RelNav. Relative navigation.

RETRO. Report of offload information given to COD aircraft by Marshal.

RF. Radio frequency.

RHIB. Rigid hull inflatable boat.

RRHB. Repeatable release hold back bar.

S

SAR. Search and rescue.

SHP. Shaft horsepower.

SIF. Selective identification feature.

SIGINT. Signal intelligence.

SINS. Shipboard inertial navigation system.

SLAM. Standoff land attack missile.

SOP. Standard operating procedure.

SOX. Overhead low pressure sodium (oxide) floodlight.

SRC. Scheduled removal component.

T

TACAN. Tactical air navigation.

U

UDB. UHF data broadcast.

USW. Undersea warfare.

UTM. Universal test message.

V

VERTREP. Vertical replenishment.

VFR. Visual flight rules.

VHF. Very high frequency.

VIP. Very important person.

VMC. Visual meteorological conditions.

VOD. Vertical onboard delivery.

W

WOD. Wind over deck.

Z

Zip lip. No radio transmissions.

PREFACE

SCOPE

Naval Air Training and Operating Procedures Standardization (NATOPS) products have been developed to improve aviation safety and readiness throughout the Navy and Marine Corps. They are prepared under the authority of the Chief of Naval Operations and issued by Commander, Naval Air Systems Command to support naval aircraft flight operations. NATOPS Manual (NM) products contain the operating procedures, flight clearance restrictions, and related information necessary for flight crews to effectively operate their aircraft in the environments they encounter. They provide the best available T/M/S aircraft information and operating instructions for most circumstances. However, no manual can address every situation completely or be a substitute for sound judgment. Operational situations may require modification of the procedures contained therein. This manual supplements T/M/S aircraft NFM products, and contains descriptions of visual landing aids, and requirements and operating procedures for landing aircraft aboard aircraft carriers. LSOs, unit commanders, flight crew members, and support personnel concerned with landing aircraft aboard CVs should have a thorough knowledge of its contents.

CV NATOPS PROGRAM INFORMATION

See Chapter 1 for (1) the CV NATOPS product set, and (2) CV NATOPS program management assignments which include the NATOPS Model Manager Unit, the NATOPS Advisory Group, and the NATOPS Cognizant Command. Chapter 1 also includes other pertinent NATOPS program information unique to the subject manual.

TYPES OF NATOPS PRODUCTS

Revisions to NATOPS products are produced in a printable electronic (eNATOPS) form where every change to the product is released as a complete product identified by title, NAVAIR number and date. This NATOPS Manual is an eNATOPS product.

ENATOPS PRODUCTS

eProducts are a class of products that are intended to exist only in the electronic environment. This class of products can include derivatives such as ePCLs, eFCFCLs, etc. While the contents of eProducts remain the same as paper products, eProducts will appear slightly different, and their distribution process is also changed. eProduct updatates occur at regular intervals that result in the delivery of printable electronic format. There will be no changes, interim changes, errata, or pen-and-ink entries released. Changed text and illustrations within an eProduct will be identified by highlighting or change bars in the page margin.

NATOPS checklists and other NATOPS products required in emergency situations (such as loss of electrical power) will remain available as paper-based products.

DETERMINING THE CURRENT VERSION OF NATOPS PRODUCTS

Before using this product ensure that you have the latest version by verifying the dates of publications in use match those available on the NAVAIR Airworthiness and CYBERSAFE website at https://airworthiness.navair.navy.mil or on the Naval Air Technical Data and Engineering Services Command (NATEC) website at https://mynatec.navair.navy.mil. See the Record of Changes page for a current listing of this NATOPS product set.

KEEPING NATOPS PRODUCTS CURRENT

NATOPS products must be kept current through an active manual change program. Corrections, additions to, deletions from, and suggestions for improving contents should be submitted as NATOPS Change Recommendations (CRs) as soon as possible after discovery. CRs shall be worded as specifically as possible. CRs may be submitted by anyone in accordance with CNAF M-3710.7. All users are encouraged to contribute to the currency, accuracy, and usefulness of this and other NATOPS products by submitting timely CRs. NATOPS product content standards are found in MIL-DTL-85025B(AS), available at https://airworthiness.navair.navy.mil.

THE NATOPS CR PROCESS

Categories of CRs. NATOPS CRs are submitted as URGENT, PRIORITY or ROUTINE. URGENT and PRIORITY CRs usually involve safety-of-flight matters that require resolution prior to the next scheduled update. Some PRIORITY change recommendations may be upgraded to URGENT by NAVAIR (AIR-4.0P), by the NAVAIR Program Class Desk or by the NATOPS Model Manager.

Classifications of ROUTINE CRs. ROUTINE category CRs are further classified as follows:

Technical — Typically those CRs which affect systems description and/or limitations which must be confirmed/evaluated by engineers. Approved Technical CRs are bundled and issued as part of the next NATOPS update. CRs are also the fleet entry point for NATOPS technical information and/or assistance requests.

Operational — CRs which affect the operation of aircraft/systems. These typically involve changes in procedures. Approved operational CRs are incorporated via the next update, unless otherwise directed by the NATOPS PM.

Administrative — CRs which correct obvious errors requiring no further review (duplications, grammar, numbering, etc.). Approved Administrative CRs are incorporated via the next NATOPS update.

Submitting NATOPS CRs.

The preferred means of submitting NATOPS CRs is through the Airworthiness Issues Resolution System (AIRS). AIRS may be accessed at https://airworthiness.navair.navy.mil. AIRS is the fastest and most efficient means of processing and resolving NATOPS CRs. In the event that a connection to AIRS is not available, URGENT and PRIORITY change recommendations may be submitted via naval message in accordance with CNAF M-3710.7.

UPDATES TO NATOPS PRODUCTS

NATOPS publications are reviewed, and updates issued, at regular intervals as determined by the NATOPS Program Manager. CRs are held and compiled into a regularly scheduled update. This ensures that CRs do not languish, and are incorporated in a timely manner. Updates are announced via naval messages. Updates are delivered in the form of revisions; for paper publications/products, this may involve making pen-and-ink entries and/or replacing pages. Update messages and update contents are posted on the Airworthiness and CYBERSAFE website at https://airworthiness.navair.navy.mil and on the NATEC website at https://mynatec.navair.navy.mil.

OBTAINING PAPER COPIES OF NATOPS PRODUCTS

One-Time Orders. Paper copies of eProduct NATOPS updates are not available through the naval supply system, but may be ordered in limited quantities through the NATEC print-on-demand system by contacting the FRCSW Logistics Element Manager (LEM) with appropriate justification at DSN 735-2425 or CML (619) 545-2425.

Copies of paper products may be ordered from the Naval Logistics Library (NLL) at https://nll.ahf.nmci.navy.mil, or through the naval supply system. They are also available in pdf format on the NAVAIR Airworthiness website at https://airworthiness.navair.navy.mil or on the NATEC website at https://mynatec.navair.navy.mil.

Note

- When the current revision of a paper product is ordered through the NLL, all active paper updates are shipped with the active revision.
- Quantities of a paper product ordered in excess of the maximum order quantity posted on the NLL website will not be shipped. If additional quantities are required, contact the FRCSW LEM at NATEC tels DSN 735-2425 or CML (619) 545-2425 for assistance.
- Active interim changes to NATOPS products are published in electronic media only and are available online at https://mynatec.navair.navy.mil and https://airworthiness.navair.navy.mil.

Distribution. Upon request by the NATOPS Program Manager, NATEC sends printed copies of entire publications or updates to users whose NATOPS product requirements are maintained within its Automatic Distribution Requirements List (ADRL) database. NATEC also maintains an e-mail address list for each product in its ADRL database and automatically sends notices of all new paper and updated products to listed units. Detailed procedures for establishing and maintaining an ADRL account are contained in NAVAIR technical manual 00-25-100 work package (WP) 07-00, available at https://mynatec.navair.navy.mil.

Note

To avoid cost and delivery inefficiencies that result from excessive or insufficient distributions, the NATOPS Program Managers are authorized to adjust automatic distribution quantities of NATOPS products. Units should confirm their requirements with the NATOPS Program Manager in advance of distribution to ensure they receive sufficient quantities.

CHANGE SYMBOLS

Revised text is indicated by a black vertical line in the outside margin of the page, like the one adjacent to this paragraph. Change symbols in the margin by the chapter number and title indicate a new or completely revised chapter.

SPECIAL TERMINOLOGY IN NATOPS PRODUCTS

The following special terminology applies to all NATOPS products:

Warnings, Cautions, and Notes

The following definitions apply to WARNINGS, CAUTIONS, and Notes:

WARNING

Explanatory information about an operating procedure, practice, or condition, etc., that may result in injury, death, or loss of aircraft if not carefully observed or followed.

CAUTION

Explanatory information about an operating procedure, practice, or condition, etc., that may result in damage to equipment if not carefully observed or followed.

Note

Explanatory information about an operating procedure, practice, or condition, etc., that must be emphasized.

Requirement for compliance

“Shall” is used only when application of a procedure is mandatory.

“Should” is used only when application of a procedure is recommended.

“May” and “need not” are used only when application of a procedure is optional.

“Will” indicates futurity and never indicates any degree of requirement for application of a procedure.

Requirement for landing aircraft

“Land immediately” means execute a landing without delay.

“Land as soon as possible” means land at the first landing site at which a safe landing can be made.

“Land as soon as practicable” means extended flight is not recommended. The landing site and duration of flight is at the discretion of the pilot in command.

CHAPTER 1

Introduction

1.1 PURPOSE

This manual issues policy, guidance and information for CV commanding officers, air officers, air operations officers, air wing commanders, squadron commanding officers, aircraft detachment Officers-In-Charge, and aircrews aboard CVN type or CV type ships. The information presented herein includes relationships, responsibilities, training requirements, and selected normal and emergency procedures for conducting flight operations on and in the vicinity of the CV.

1.2 SCOPE

The responsibilities, requirements and procedures contained in this manual apply to all persons involved with flight operations on all CVN type or CV type ships. The information addressed in this manual encompasses a wide range of subjects that include planning and preparing for flight operations, control of and communications with aircraft, aircraft launch and recovery procedures, and aircraft and aviation weapons handling procedures.

1.3 THE CONTENTS OF THIS PUBLICATION

This manual contains information and procedures for the operation and support of aircraft aboard and in the vicinity of CVN type or CV type ships. The chapters and appendix of this manual address pre-deployment planning, preparation for flight operations, and Air Traffic Control procedures. They contain responsibilities and procedures for launching, recovering, and moving aircraft, supporting flight operations, and maintaining aircraft. And, they also address ship's plane guard, SAR, vertical replenishment procedures, and night vision device-aided flight deck operations.

1.4 NATOPS PRODUCT SET

The CV NATOPS product set is comprised of the following product:

NAVAIR 00-80T-105 CV NATOPS Manual

1.5 CV NATOPS PROGRAM MANAGEMENT ASSIGNMENTS

Units are designated to perform the duties and carry out CV NATOPS Manual program management responsibilities in accordance with CNAF M-3710.7 as follows.

1.5.1 NATOPS Model Manager Unit

LSO School is designated as the NATOPS Model Manager Unit for the CV NATOPS Manual. Contact information for LSO SCHOOL is as follows:

Message PLAD:	LSO SCHOOL NAS OCEANA VA
Address:	OFFICER IN CHARGE U.S. NAVY LSO SCHOOL ATTN: NATOPS PROGRAM MANAGER 841 F AVE BLDG 150 VIRGINIA BEACH VA 23460-2189

Telephone:	CML (757) 433-2515 DSN 433-2515
Email Address:	LSO_SCHOOL_OCEN_ADMIN@navy.mil

1.5.2 NATOPS Advisory Group

The following are designated as members of the NATOPS Advisory Group for the CV NATOPS manual:

NATOPS Advisory Group Member	Representative's Code
Commandant of the Marine Corps	HQMC (SD)
Commander, Naval Air Force Reserve	NAVAIRFORES (N42)
Commander, Naval Air Forces	NAVAIRFOR (N455)
Commander, Naval Air Forces, U.S. Atlantic Fleet	NAVAIRLANT (N33)
Commander, Naval Air Forces, U.S. Pacific Fleet	NAVAIRPAC (N3A1)
Commanding General, U.S. Marine Forces Command	MARFORCOM (DSS)
Commanding General, U.S. Marine Forces Pacific	MARFORCOM (SAFETY)
Commander, Naval Air Systems Command	NAVAIRSYSCOM (AIR-4.0P/PMA-251)
Commanding General, Fourth Marine Air Wing	FOURTH MAW (DOSS)
Commander, Naval Safety Center	NAVSAFECEN (Code 11)
Chief of Naval Air Training	CNATRA (N72)

1.5.3 NATOPS Cognizant Command

Naval Air Forces is designated as the Cognizant Command for the CV NATOPS manual.

1.6 COMMANDING OFFICERS

The commanding officers of CV ships, air wing commanders, squadron commanding officers, and aviation detachment officers in charge shall ensure that flight crews and aviation support personnel assigned to their units are familiar with the information contained herein.

1.7 OTHER RELATED PUBLICATIONS

The following publications complement the information contained within CNAF M-3710.7 and this NATOPS manual, and should be referred to whenever additional information about the subjects they address is needed:

NAVAIR 00-80R-14	NATOPS U.S. Navy Aircraft Firefighting and Rescue Manual. Contains detailed requirements and procedures for rescue and firefighting personnel.
NAVAIR 00-80R-14-1	NATOPS U.S. Navy Aircraft Emergency Rescue Information Manual. Contains detailed information and procedures for individual T/M/S aircraft, onboard equipment and associated hazards for use by rescue, firefighting, and crash and salvage personnel.
NAVAIR 00-80R-19	NATOPS U.S. Navy Aircraft Crash and Salvage Operations Manual (Afloat). Contains detailed information and procedures for crash and salvage personnel on the handling and disposition of aircraft that cannot be taxied, towed, or moved normally.

NAVAIR 00-80T-104	NATOPS Landing Signal Officer Manual. Contains LSO training and aircrew orientation requirements, information about visual landing aids, and procedures for use by shipboard LSOs and aircrews engaged in landing aircraft aboard CVN type or CV type ships.
NAVAIR 00-80T-109	Aircraft Refueling NATOPS Manual. Contains detailed information and procedures for handling of aviation fuels from delivery aboard ship through dispensing into aircraft.
NAVAIR 00-80T-112	NATOPS Instrument Flight Manual. Contains detailed instrument flying procedures and instrument rating and qualification requirements for pilots and NFOs, including information about physiological effects such as disorientation.
NAVAIR 00-80T-113	Aircraft Signals NATOPS Manual. Contains standard hand, wand, light, and beacon signals for control, communication and use among aircraft; tower (PriFly); aircraft launch, recovery and handling personnel; and ground support personnel, ashore and afloat.
NAVAIR 00-80T-120	CV Flight/Hangar Deck NATOPS Manual. Contains detailed information on handling, fueling, launching and recovering aircraft aboard CVN type or CV type ships.
NAVAIR 00-80T-123	Aircrew Systems NATOPS Manual. Contains detailed descriptions and procedures for use of aircrew clothing and equipment in various environments.
NAVAIR 00-80T-125	Air Traffic Control (Afloat) NATOPS Manual. Contains procedures for conducting flight operations on and near CVNs, LHAs and LHDs. (Does not address air-capable ships).
Ship's Air Operations Manual	An air operations manual published by each ship containing aircraft operating information and procedures unique to that individual ship.

1.8 TRAINING

Chapter 2 contains pre-deployment training requirements for ship and air wing personnel. It includes a predeployment lecture syllabus for all personnel, as well as ones for plane captains, maintenance personnel, ordnance personnel, and flight crewmembers.

1.9 WAIVERS

Waivers to the requirements imposed by this manual must be approved in accordance with CNAF M-3710.7.

CHAPTER 2

Predeployment

2.1 TRAINING REQUIREMENTS

The air wing commander shall coordinate all squadron predeployment training requirements with the ship.

Squadron commanders shall ensure all personnel complete the lecture syllabus outlined below prior to initial deployment. This applies equally to those squadrons/detachments that embark/operate for short-term workups, CQ, transits, and so forth. These lectures need not be repeated before every deployment; however, squadron commanders are responsible for providing refresher training as required for the safety of personnel and equipment. Ship's company personnel should assist in this training; however, when this is not feasible, the most qualified squadron personnel shall be utilized.

The air officer shall ensure in addition to the formal training required by type commanders, air department personnel receive training as necessary to acquaint them with the peculiarities of the specific aircraft models being deployed. Particular emphasis shall be placed on special aircraft handling requirements, flightcrew rescue procedures, specific aircraft firefighting procedures, and aircraft salvage procedure. In addition, Crash and Salvage personnel shall conduct a face-to-face briefing with squadron aircrew personnel, communicating what they expect during an emergency egress.

Note

All personnel assigned flight deck working stations shall first complete Flight Deck Familiarization PQS (NAVEDTRA 43426-0 Series).

2.2 ADDITIONAL REQUIREMENTS

The commanding officer of each CV shall promulgate and distribute, as appropriate, an air operations manual containing standardized air traffic control procedures covering all normal evolutions as well as common emergencies in support of and supplementary to the procedures contained in this manual, including but not limited to the following subjects: communications control; plane guard helicopter/ship; marshal, arrival, and departure procedures; ZIP LIP; procedures during shipboard systems failures; hot refueling, and standard arming and dearming areas.

As a minimum, the air operations manual shall be reviewed annually to ensure the subject matter is pertinent and up to date. New or revised air operations manuals shall be forwarded to the appropriate TYCOM, COMCARGRU/COMCRUDESGRU, COMCARAIRWING, CARAIRWING, and COMNAVSAFECEN (Code 114). Distribution to other units conducting air operations activities with the CV is encouraged.

The air wing commander shall promulgate and distribute, as appropriate, OPORD containing but not limited to the following: air wing organization, general operating procedures, VMC rendezvous, air wing recovery order and altitude assignments, tanker patterns and procedures, ZIP LIP, EMCON procedures, rainmaker, Hawkeye controlled approach procedures, deck launch intercept, and lost communications/NAVAID procedures.

Squadron commanders shall submit prior to deployment a complete list of aircraft being deployed. The list shall include side numbers, ACLS addresses, basic weights, certification that all aircraft are FOD free, verification that all aircraft hoisting points/access panels are readily accessible and functional, and any peculiarities in configuration that will affect handling, ordnance loading, or mission capability. Squadron commanders shall also submit a list of pilots and individual requirements for initial and refresher carrier qualification.

Each squadron commander, when embarked, shall provide PriFly control and CATCC with a current NATOPS flight manual and pocket checklist for each aircraft under his command.

The air officer shall ensure the availability of appropriate aircraft handling equipment, including aircraft hoisting slings, for each model aircraft assigned.

The AIMD officer shall ensure the availability of appropriate special aircraft maintenance equipment for each model aircraft assigned.

The air operations officer shall ensure accurate bingo fuel and fouled deck endurance data are available for each model aircraft being deployed. He shall also ensure CATCC personnel are proficient in the interpretation of these data.

The commanding officer shall ensure all personnel assigned duties on CV flight decks comply with the required physical standards contained in the Manual of the Medical Department, U.S. Navy.

2.3 PREDEPLOYMENT LECTURE SYLLABUS

2.3.1 All Personnel

1. Duties and responsibilities during flight quarters, general quarters, fire quarters, abandon ship, man overboard, and other general drills.
2. Firefighting and damage control shipboard indoctrination.
3. Duties and responsibilities under HERO and EMCON conditions.
4. Shipboard safety and smoking regulations.
5. Watch standing peculiar to shipboard operations.
6. Flight and hangar deck safety precautions.
7. Proper use and care of flight deck flotation vest.
8. Water survival and rescue procedures.

2.3.2 Plane Captains

1. Aircraft handling procedures.
2. Flight and hangar deck safety precautions.
3. Responsibilities during launch and recovery.
4. Aircraft tiedown requirements and techniques.

2.3.3 Maintenance Personnel

1. Shipboard maintenance procedures.
2. Special shipboard safety precautions.

2.3.4 Flight Crewmembers

1. Flight and hangar deck safety precautions.
2. Launching procedures and signals.
3. Arrested landing procedures and signals.
4. Aircraft control doctrine and procedures.
5. Emergency procedures peculiar to carrier operations.
6. Special procedures for Case III.
7. Landing aids/PALS.
8. Communications.
9. Flight deck configuration and lighting.

2.3.5 Ordnance Personnel

1. Shipboard weapon handling procedures.
2. Shipboard ordnance safety instructions.

CHAPTER 3

Preparing for Flight Operations

3.1 THE AIR PLAN

To obtain maximum efficiency from personnel and equipment, carrier air operations must be precisely scheduled in every respect. Air operations and strike operations are the coordinating and scheduling agencies for all flight operations. The strike operations officer will collect all required flight information for preparation of the daily air plan that will be submitted to the operations officer via the air operations officer, for approval and signature.

In order for strike operations to prepare an air plan that is within the capabilities of the air wing and all supporting activities, the following must be reported on a regular basis:

1. An up-to-date inventory of aviation ordnance on board and available for the next day's operation.
2. The status of all embarked aircraft. This report shall be delivered to the bridge, flag bridge, flag operations, air operations, and the air department. In addition to current aircraft status, the report should include expected changes in status and test flight requirements for the following day.
3. Air intelligence information concerning the next day's operation.

Normally, the air plan will be distributed on the evening before the scheduled operations. When the air plan is delayed, the strike operations watch officer shall provide advance information to allow preparations for the first flights. As a minimum, air ops, flight deck control, PriFly, the air department duty officer, all ready rooms, CVIC, the ship's ordnance handling officer, and CDC shall be advised of the following:

1. Launch times.
2. Mission.
3. Flight composition.
4. Fuel requirements.
5. Ordnance loading.

The air plan shall include the following:

1. Event number.
2. Launch time.
3. Recovery time.
4. Mission.
5. Number and model of aircraft, including spares.
6. Squadron and radio call sign.
7. Total sorties.
8. Sunrise, sunset, moonrise, moonset, phase.
9. Date.
10. Fuel.
11. Alert aircraft.

12. Logistics aircraft.
13. Tactical frequencies.
14. Notes as required. Notes shall include the following:
    a. EMCON/ZIP LIP conditions.
    b. Ready deck schedule.
    c. Any other information required including restrictions or hazards to flight.

Upon receipt of the daily air plan, each squadron shall prepare and distribute its flight schedule as required. This schedule shall designate pilots, radio calls, and the mission for each flight assigned. It is the responsibility of the aircraft handling officer to ensure strict conformance to the air plan.

3.1.1 The Ordnance Load Plan

Strike operations shall prepare an ordnance load plan that will be utilized as a supplement to the air plan for aircraft ordnance loads. No changes will be made to the ordnance load plan without approval by the strike operations officer. It is the responsibility of the aircraft handling officer to ensure strict conformance to the ordnance load plan.

3.2 FLIGHT QUARTER STATIONS

Flight quarter stations shall be manned when directed and as prescribed in the ship's watch quarter and station bill. Some evolutions may not require that all flight quarter stations be manned. On such occasions, specific instructions should be issued at the time the word is passed to set flight quarters (for example, “Flight quarters for respot,” “Flight quarters for helicopter operations,” and so forth). Tiltrotor operations fall under flight quarters and deviations will be by exception per Air Officer SOP.

3.2.1 Wearing of Flight Deck Uniforms

Control and issue of flight deck clothing (see Figure 3-1) shall be enforced by the Air Officer and Carrier Air Wing Commander (CAG) for all personnel working on the flight deck.

A complete flight deck uniform shall consist of TYCOM approved flight deck trousers, flight deck jersey, flotation device, steel-toe boots, leather gloves, helmet with goggles and jersey corresponding in color to that of their respective detail and with their billet title on the jersey and flotation vest. Coveralls and Navy Working Uniform (NWU) are not authorized to be worn on the flight deck at any time while flight deck operations are being conducted. Personnel assigned specific duties shall wear the appropriate flight deck gear per Figure 3-1.

3.2.2 Special Clothing

The Supply Officer shall procure, store, and issue special clothing per current allowances and standard accounting procedures.

Special clothing shall be drawn from the Supply Officer for the Air Department and Air Wing personnel, as prescribed by ship's instructions. It shall be reissued to individuals on an allowance/need basis via the Division Officer, who accounts to the Air Officer and Carrier Air Wing Commander by means of sub-custody receipts.

Special clothing shall be worn only when prescribed by the Air Officer or CAG.

3.2.3 Aqueous Film Forming Foam (AFFF) System and Mobile Firefighting Equipment

The guidelines for manning and disposition of the AFFF system and mobile firefighting equipment shall be observed as outlined in NAVAIR 00-80R-14, U.S. Navy Aircraft Firefighting and Rescue Manual.

3.2.4 Preliminary Procedures — CATCC

One and one-half hours before scheduled flight operations, CATCC shall be manned and the checkoff list in Chapter 5 of NAVAIR 00–80T-125 executed, commensurate with the EMCON plan in effect. Immediately report

all discrepancies for appropriate action and advise the operations officer and commanding officer if equipment failure will affect air operations.

3.2.5 Preliminary Procedures — Air Officer

When flight quarters is sounded, the air officer shall ensure the following:

1. Procedures prescribed in applicable bulletins and instructions for inspection and preparation for operation of the catapults, arresting gear, visual landing aids, ILARTS, elevators, aviation fuel system, and crash and firefighting equipment are meticulously followed. Discrepancies shall be reported to the bridge as soon as they are detected. A decision to conduct flight operations when discrepancies are known to exist in any of the above equipment shall be made only by the commanding officer.
2. A FOD walkdown is conducted prior to flight operations and as required by the air officer during flight operations.

Figure 3-1. Flight Deck Uniforms

PERSONNEL	HELMET	JERSEY/FLOTATION VEST	SYMBOLS, FRONT AND BACK
Aircraft handling crew and chock men	Blue	Blue	Crew number
Aircraft handling officers and plane directors	Yellow (Notes 1 through 5) as needed	Yellow	Billet title — crew number
Arresting gear crew	Green	Green	A
Aviation fuel crew	Purple	Purple	
Cargo handling personnel	White	Green	“Supply”/“POSTAL” as appropriate
Catapult and arresting gear officers	Green	Yellow	Billet title
Catapult crew	Green	Green	C
Catapult/AG QA	Green	White	ALRE QA
Catapult safety observer (ICCS)	Green	(Note 7)	Billet title
Catapult Steam Watch	None	Green/white	CAT STEAM WATCH
Crash and salvage crews	Red	Red	Crash/Salvage
Elevator operators	White	Blue	E
Explosive ordnance disposal	Red	Red	“EOD” in black
GSE troubleshooter	Green	Green	“GSE”
Helicopter LSE	Red	Green	H
Helicopter plane captain	Red	Brown	H
Hook runner	Green	Green	A
IW watch	White	White	IW stenciled on the back of the vest
JBD safety observer	Green	Green/White	JBD safety
Landing signal officer	None	White	LSO
Leading petty officers:			
Line	Green	Brown	Squadron designator and “Line CPO”
Maintenance	Green	Green	Squadron designator plus “Maint. CPO”
Quality assurance	Brown	White	Squadron designator and “QA”

Figure 3-1. Flight Deck Uniforms (cont.)

PERSONNEL	HELMET	JERSEY/FLOTATION VEST	SYMBOLS, FRONT AND BACK
Squadron plane inspector	Green	White	Black and white checkerboard pattern and squadron designator
LOX crew	White	White	LOX
Maintenance crews	Green	Green	Black stripe and squadron designator
Medical	White	White	Red cross
Messengers and telephone talkers	White	Blue	T
Ordnance	Red	Red	3-inch black stripe and squadron designator/ship's billet title
Ordnance CAG Arm/De-arm	Red/Red	Red/Red	3-inch black stripe and the letters “CA” in 6-inch white reflective material
Ordnance QA	White	(Note 9)	Squadron designator and “ORDNANCE QA/SAFETY”
Photographers	Green	Green	P
Plane captains	Brown	Brown	Squadron designator
Safety	White	White	“SAFETY”
Supply VERTREP coordinator	White	Green	“SUPPLY COORDINATOR”
Topside Petty Officer	Green	Green	A on back
Tractor driver	Blue	Blue	Tractor
Tractor King	Blue	(Note 8)	TK
Transfer officer	White	White	“TRANSFER OFFICER”

Notes:

1. Personnel in charge of a detail, such as ordnance and maintenance, shall wear a complete flight deck uniform that consists of TYCOM approved flight deck trousers, flight deck jersey, flotation device, steel-toe boots, leather gloves, helmet with goggles and jersey corresponding in color to that of their respective detail and with their billet title on the jersey and flotation vest.
2. Helmets for all personnel shall be marked with a 6-inch square (or equivalent) of white reflective tape on the back shell and a 3-inch by 6-inch (or equivalent) of white reflective tape on the front shell. Landing signal officers are not required to wear helmets or sound attenuators when engaged in aircraft control. Helmets shall have a 2-inch piece of velcro on the left side of the front shell and velcro on the survival light.
3. A minimum 3 inch stencil shall be used to identify billet on the front/back of flight deck jerseys. Stencil shall be placed on the back of the MK-1 flotation vest.

Figure 3-1. Flight Deck Uniforms (cont.)

PERSONNEL	HELMET	JERSEY/FLOTATION VEST	SYMBOLS, FRONT AND BACK

Notes (cont.):

4. Three reflective international orange stripes, 1-inch wide, evenly spaced, running fore and aft on top of the white reflective tape.
   a. All air department officers
   b. Air department Chief Petty Officers and Leading Petty Officers
   c. EOD team members
   d. All ordnance officers and gunners
   e. Ordnance handling officer and gunner.
   f. Arresting Gear Topside Petty Officer.
5. Helmets for all personnel who have not completed flight deck observer qualification shall be marked (front and rear) with a “T” using 1-inch wide blue reflective tape over the existing reflective tape (front minimum 2-inch tall, rear minimum 3-inch tall lettering).
6. Helmets for all aircraft directors under instruction shall be marked (front and rear) with a “U/I” using a 1-inch wide blue reflective tape evenly spaced over the existing reflective tape (front minimum 2-inch tall, rear minimum 3-inch tall lettering).
7. ICCS green jersey/yellow flotation vest.
8. White jersey/red flotation vest.
9. Yellow jersey/blue flotation vest.
10. Only authorized, all leather, steel-toe boots shall be worn on the flight deck.
11. LOX boots shall only be worn by personnel directly assigned in the handling of liquid oxygen.
12. All personnel shall wear all leather gloves.
13. Only authorized foul weather jacket shall be worn on the flight deck.
14. All signal wands/flashlights Figure 3-2) shall be secured with heat shrink/duct tape to prevent cone separation.

Figure 3-2. Standard Signal Wands

PERSONNEL	COLOR	NO	TYPE[1]
Aviation Fuels	Amber	1	Stubby
Bow Safety	Red	1	Standard
Green	1	Standard	
Catapult Hookup Petty Officer	White	1	Stubby
Catapult Safety Observer (ICCS)	Red	1	Standard
Green	1	Standard	
Center Deck Operator (Topside)	White	1	Stubby
Deck Edge (Arresting Gear)	Red	1	Standard
Green	1	Stubby	
Deck Edge (Catapults)	Red	1	Standard
Flight Deck Officer and Aircraft Directors	Amber	2	Standard
Hook Runner	Red	1	Stubby
JBD Safety	White	1	Stubby
Launching and Arresting Gear Officer/Helicopter LSE/LSO	Red	1	Standard
Green	1	Standard	
LSO Platform Talker (Arresting Gear)	Red	1	Standard
Green	1	Standard	
Ordnance Arming Crew	Red	1	Stubby Banded[2]
Ordnance Arming/ Safety Supervisor	Red	2	Standard Banded[3]
Plane Captain	Blue	2	Standard
Squadron Aircraft Inspector	Blue	1	Stubby
Weightboard Operator	White		Stubby

NOTES:

1. Standard and stubby denote cone shape. Standard denotes full length cones; stubby is a modified cone providing 3 inches of lighted cone. Any suitable battery and switch housing is authorized if cone is brightly lighted. All signal wands/flashlights shall be equipped with heat-shrinkable sleeving/duct tape to prevent possible cone separation.
2. One 3/4-inch band on the cone (plastic electricians tape is recommended).
3. Two 3/4-inch bands spaced equidistant on the cone (plastic electricians tape is recommended).

3.3 BRIEFING

It is the responsibility of squadron or unit commanders to ensure all flightcrews have been properly briefed and have sufficient information to complete the assigned mission. Briefing checkoff lists shall be used as required by applicable aircraft NATOPS flight manuals. Each briefing must include EMCON procedures, if applicable, and procedures to be followed in the event of communication or NAVAID failure.

Air ops shall provide the following prelaunch briefing information 2-1/2 hours prior to each event:

1. Launch and recovery times.
2. Launch and recovery PIM.
3. NAVAID status and frequencies.
4. Ship's weather.
5. Weather at bingo fields and en route.
6. Emergency data.
   a. Bearing and distance to nearest land.
   b. Bearing and distance to nearest suitable landing field.
   c. NAVAIDs, frequencies, and facilities at nearest field.
   d. Ready carrier-call, frequencies, NAVAIDs, and PIM.
   e. Expected final bearing.
   f. Emergency marshal fixes/altitudes/approach times.
7. Air traffic control data.
   a. Departure/rendezvous radials.
   b. Departure frequency and IFF/SIF mode and code.
   c. Special procedures for ZIP LIP/EMCON conditions (if in effect).
8. Any restrictions or hazards to flight.
9. Pertinent information not included in the air plan.

CATCC shall provide to all aircraft not embarked in the ship, but engaged in any support operations (COD, VOD, etc.) that require them to recover aboard and launch again, all applicable items in the CATCC provided briefing information listed above.

3.4 FLIGHT PLANS AND ADVISORIES

The requirements for filing flight plans and advisories vary with each operating area and are contained in the DoD Flight Information Publications (FLIPs) and fleet operating directives. As a rule, flight plans will be required for flights that:

1. Terminate ashore.
2. Proceed across ADIZ boundaries and are not covered by a flight advisory.
3. Proceed over land.

Flight advisories shall be filed for flights within ADIZ boundaries by all aircraft that will land back on board ship and are not covered by a flight plan. Squadrons shall file flight plans (DD175/DD1801) with CATCC to meet time requirements established by applicable operating area manuals or ICAO guidelines.

3.4.1 Close Proximity Operations

During concurrent flight operations by two or more CVs/LHAs/LHDs, or concurrent operations between a CV/LHA/LHD and other air-capable ships (fixed wing or helicopter), each ship should remain in its assigned disposition in order to reduce air traffic coordination problems. ATC must closely monitor and coordinate flight patterns to avoid mutual interference. Prelaunch procedures shall include exchange of air plans and prelaunch notification by aviation-capable ships and acknowledgment by the CV/LHA/LHD prior to any flight operations within 10 nm of the CV/LHA/LHD.

Note

Unscheduled launches or recoveries that are caused by emergency or operational necessity are permissible, but must be coordinated with the OTC as soon as possible because of the inherent danger of close proximity flight operations.

3.5 CHANGES IN PILOT OR AIRCRAFT ASSIGNMENTS

Any last-minute changes in pilot or aircraft assignments must be relayed to CATCC and PriFly as soon as the change occurs.

3.6 AIR TRANSFER OFFICER

The ATO is responsible to the air operations officer for the safe and orderly flow of passengers, mail, and cargo on and off carriers by aircraft. In addition to the duties delineated in NAVAIR 00-80T-120, the ATO shall be responsible for the following:

1. Conduct passenger preflight briefing to include the following:
   a. Flight deck precautions.
   b. Primary and alternate routes from loading office to aircraft.
   c. Personal survival equipment and its use.
   d. Aircraft ditching and emergency egress stations.
2. Ensure personnel transiting the flight deck do not offer any FOD hazard and they are escorted with the highest regard for personal safety.
3. Be familiar with load capacities/restrictions, survival equipment carried, and emergency escape procedures for all aircraft types expected on board for logistic purposes. Inspect all cargo prior to loading and ensure hazardous material is certified by qualified personnel in accordance with NAVSUP 505 for shipping.
4. Ensure passengers are provided with proper cranial helmet, with goggles attached, and flotation equipment.
5. Provide a detailed mission requirement card to helicopters performing logistic missions. The card shall contain the following minimum information:
   a. Order of ships to be visited.
   b. Ship name(s), hull number(s), call sign(s), NAVAID(s).
   c. Expected bearing and distance to each ship (from carrier).
   d. Pertinent radio frequencies for ships visited.
   e. Anticipated number of passengers to be delivered/picked up from each ship.
   f. Weight and description of cargo being delivered/picked up from each ship.
   g. Landing deck availability at each ship to be visited.
   h. HIFR capability at each ship to be visited.

Note

If original flight is to be extended, Air Operations shall, where appropriate, update mission requirement card information as outlined above.

6. Be familiar with the current OPNAVINST 4630.25 (Air Transportation Eligibility) regarding passenger priority.
7. Ensure proper personnel, equipment, and material are positioned to facilitate rapid offload/ onload of COD/VOD aircraft to minimize on-deck time and lessen impact on normal flight deck operations.
8. Ensure all personnel under ATO supervision (i.e., working parties) complete Flight Deck Familiarization PQS (NAVEDTRA 43426-0).

3.7 PASSENGER TRANSFERS

All passenger transfers shall be conducted IAW CNAF M-3710.7.

CHAPTER 4

Air Traffic Control Doctrine

4.1 RESPONSIBILITIES

4.1.1 Operations Officer

As defined by Navy regulations, the operations officer shall be responsible for the control of airborne aircraft except when control is assigned to other authority. This control refers to all airborne operations not incidental to the actual launch or recovery of aircraft.

4.1.2 Air Operations Officer

The air operations officer is responsible to the operations officer for coordination of all matters pertaining to flight operations, the proper functioning of the CATCC and shall determine the type of approach and required degree of control.

4.1.3 Air Officer

The air officer determines the case launch and/or recovery. The air officer is also responsible for visual control of all aircraft operating in the carrier control zone. Under Case I and II conditions, this responsibility may be extended beyond the carrier control zone to include all aircraft that have been switched to air officer's control frequency. For special operations such as bombing a sled or air demonstrations, the air officer may exercise control outside of the carrier control zone. Additionally, the air officer is the carrier control zone clearing authority. Agents desiring to operate aircraft within the control zone must obtain the air officer's approval prior to entry. This clearance shall include the following:

1. Operating instructions as required for avoiding other traffic.
2. Information concerning hazardous conditions.
3. Altitude and distance limitations to which aircraft may be operated.

4.1.4 Landing Signal Officer

The LSO, under supervision of the air officer, is responsible for the visual control of aircraft in the terminal phase of the approach immediately prior to landing. LSO specific responsibilities are delineated in the LSO NATOPS Manual (NAVAIR 00-80T-104).

4.1.5 Landing Signalman Enlisted

The LSE, under the supervision of the air officer, is to ensure helicopters, on signal, are safely started, engaged, launched, recovered, and shut down. The LSE receives his directions from PriFly via light signals and/or two-way flight deck communications. It is his responsibility to ensure all tiedowns are removed prior to lift-off and that the aircraft is properly secured after landing. All signals given by the LSE are advisory with the exception of the “waveoff” and “hold,” which in all cases are mandatory. During vertical replenishment operations, the LSE directs the helicopter over the deck and provides signals for the delivery and hookup of cargo. Ensure LSE and Army aircrews are familiar with engagement/disengagement procedures of rotors, prior to recovery/launch operations.

4.1.6 Pilots

As directed by CNAF M-3710.7, the pilot is responsible for the safe and orderly conduct of the flight. The success of carrier operations largely depends upon his knowledge of and adherence to the procedures contained herein. Any

necessary deviation from these procedures or from control instructions shall be reported to the controlling agency immediately so that allowances can be made.

4.1.7 Combat Direction Center Officer

The CDC officer is responsible for mission control of aircraft assigned to him. This includes providing separation from other aircraft operations in the vicinity of the carrier and ensuring intercept/mission controllers know the basic procedures for air traffic control. Additionally, he shall ensure these controllers know their responsibility for traffic advisories to aircraft operating in visual conditions and for safe separation of aircraft operating in instrument conditions. Upon request, he shall provide information concerning areas of special operations, such as air-to-surface weapon drops and air-to-air missile shoots.

4.2 CONTROL CRITERIA

Weather in the carrier control zone is the most prominent factor affecting the type of departure and/or recovery. There are three types of departure and recovery operations, which are referred to as Case I, Case II, and Case III.

The air officer, unless otherwise specified by higher authority, determines what case launch and/or recovery will be exercised using the following weather minimums:

Case I: When it is anticipated that flights will not encounter instrument conditions during daytime departures, recoveries, and the ceiling and visibility in the carrier control zone are no lower than 3,000 feet and 5 nm respectively.

Case II: When it is anticipated that flights may encounter instrument conditions during a daytime departure or recovery, and the ceiling and visibility in the carrier control zone are no lower than 1,000 feet and 5 nm respectively.

Case III: When it is anticipated that flights will encounter instrument conditions during a departure or recovery because the ceiling or visibility in the carrier control zone are lower than 1,000 feet and 5 nm respectively; or a nighttime departure or recovery (one- half hour after sunset and one-half hour before sunrise).

4.2.1 Degrees of Control

The four degrees of control are positive, advisory, monitor, and nonradar control.

4.2.1.1 Positive Control

This control shall be utilized under the following conditions:

1. Ceiling of:
   a. Less than 1,000 feet for fixed-wing aircraft.
   b. Less than 500 feet for helicopter operations.
2. Forward flight visibility of:
   a. Less than 5 miles for fixed-wing operations.
   b. One mile or less for helicopter operations.
3. All flight operations between one-half hour after sunset and one-half hour before sunrise except as modified by the OTC or carrier commanding officer.
4. During mandatory letdown in thunderstorm areas.
5. In other situations where supervisory personnel can anticipate weather phenomena that might cause difficulty to pilots.

4.2.1.2 Advisory Control

This control shall be utilized when the traffic density in an operating area requires a higher degree of control for safety of flight than required under visual flight rules. Advisory control is normally limited to VMC and is recommended

for all operations in or adjacent to oceanic control areas or routes. Traffic separation is the responsibility of the individual pilot with assistance provided by the controlling agency.

4.2.1.3 Monitor Control

This control shall be utilized only when aircraft are operating VMC outside controlled airspace and the responsibility for separation from other traffic can be safely assumed by the pilot.

4.2.1.4 Nonradar Control

This control shall be used when shipboard radar is inoperative or so degraded as to be inadequate to provide radar separation of air traffic under conditions normally requiring positive control. The decision to attempt control of aircraft at night or in instrument flight conditions must be made with careful consideration of such factors as the following:

1. Actual meteorological conditions.
2. Degree of radar degradation.
3. Expected duration of radar degradation.
4. Fuel states and tanker fuel available for delays.
5. Divert field considerations.
6. Operational requirement.
7. Departure/recovery in progress at the time a nonradar environment develops.
8. Availability of other surface or airborne platforms to provide radar traffic separation and approach information.

WARNING

Use of ships TACAN during non-radar control is necessary to maintain required separation standards.

Note

Controller procedures for Case III non-radar control are specified in NAVAIR 00-80T-125.

4.2.2 Electronic Emission Control

The operations officer shall be responsible for EMCON in accordance with NWP 1-10.22 Volume I, NTTP 3-51.1, effective operation orders, and other governing directives. It may be necessary to develop special procedures for performing the following operations during EMCON conditions:

1. Aircraft handling.
2. Launch.
3. Departure.
4. Mission.
5. Arrival.
6. Recovery.
7. Maintenance.

COD aircraft will attempt to establish communications en route prior to arriving on station. If no radio contact is made the COD will return to base.

Detailed briefings covering responsibilities and procedures shall be conducted prior to operating under EMCON conditions. All flight crewmembers, controllers, aircraft handling personnel, and flight deck ordnance coordinators shall attend such briefings and familiarize themselves with all procedures within their area of responsibility. Overhead messages shall include applicable EMCON instructions.

The operations officer shall be responsible for setting the proper HERO conditions for control of radar and radio emissions while handling ordnance susceptible to RF energy. The air officer shall establish procedures for alerting flight deck ordnance personnel when the appropriate HERO conditions have been set.

4.3 SEPARATION CRITERIA

The following separation standards shall be utilized for aircraft under positive control or non-radar control. These criteria do not apply to tactical maneuvers such as air intercept, rendezvous, and close USW action.

4.3.1 Lateral Separation

1. The following separation standards apply to aircraft controlled by designated air search radars that rotate in excess of 7 rpm.
   a. Aircraft operating at 50 miles or more from the monitoring antenna shall be separated by a minimum of 5 miles.
   b. Aircraft operating less than 50 miles from the monitoring antenna shall be separated by a minimum of 3 miles.
   c. Aircraft on a designated approach or established downwind and inside of 12 miles shall be separated by a minimum of 2 miles. Aircraft established on final within 5 miles shall be separated a minimum of 1-1/2 miles.

Note

Air search radars that rotate in excess of 7 rpm are the only radars acceptable for an ASR approach.

2. Aircraft provided positive control with all other radars shall be separated by a minimum of 5 miles.
3. Aircraft provided nonradar control, utilizing a published approach, should be separated by 2 minutes (5 miles separation when using DME).

Note

DAIR is capable of multiple surveillance inputs to display a fused target. When JPALS is the only sensor providing input and JPALS capable aircraft are the only targets displayed, non-radar control is the only degree of control acceptable to ensure safe separation between surveilled and non-surveilled aircraft.

4.3.2 Vertical Separation

1. Jet and turbopropeller (turboprop) aircraft operating at altitudes up to and including FL 290 shall be separated by 1,000 feet.
2. Vertical separation may be reduced to 800 feet when inside of 12 nm.
   a. Receiver aircraft being provided positive control shall be separated by a minimum of 500 feet vertically from tanker aircraft until visual separation between the two aircraft can be maintained.
3. Aircraft operating above FL 290 shall be separated by 2,000 feet.

Note

Carrier-based aircraft shall fly Mean Sea Level (MSL) altitudes below 18,000 feet MSL and flight levels at and above 18,000 feet MSL unless regional supplementary procedures, as published in FLIP Planning, dictate otherwise.

4. Helicopters shall be separated by 500 feet.

4.4 COMMUNICATION CONTROL

All aircraft are considered under positive communication control while operating at sea unless otherwise directed. Pilots shall not shift frequencies without notifying and/or obtaining permission from the controlling agency. Communication procedure during ZIP LIP/EMCON conditions shall be specified during preflight briefing.

4.4.1 Control of Radio Circuits

Control of radio circuits shall be exercised as follows:

4.4.1.1 CATCC

1. Primary control of ship-shore air traffic control administrative frequencies.
2. Primary control of assigned CATCC frequencies.
3. Secondary control of aircraft guard frequencies.
4. Secondary control of land/launch frequencies.
5. Secondary control of air tactical frequencies.

4.4.1.2 CDC

1. Primary control of all air tactical frequencies.
2. Primary control of aircraft guard frequencies.
3. Secondary control of ship-shore air traffic control administrative frequencies.

4.4.1.3 PriFly

1. Primary control of land/launch frequencies.
2. Secondary control of aircraft guard frequencies.
3. Secondary control of departure control and final approach frequencies.

4.4.2 Voice Procedures

Strict radio discipline is mandatory. Voice procedures must be concise and should not vary appreciably from standard air traffic control phraseology as set forth in the ATC Afloat NATOPS (NAVAIR 00-80T-125), Air Traffic Control (FAA Order 7110.65) and Joint Brevity Words Publication (APP-7). Ship's call sign should be used on initial contact with marshal. Squadron tactical call signs are recommended as a preface to MODEX upon initial check-in, with the use of MODEX only thereafter. The use of tactical call signs should be used when there is a potential for confusion.

4.4.3 Recording of Radio Circuits

Radio circuits used for the control of air traffic shall be recorded continuously during hours of operation. CATCC shall ensure PriFly frequencies are recorded during Case I/Case II operations.

4.4.4 Communication Security

COMSEC is best accomplished by strict adherence to established principles of radio discipline. Additionally, secure voice radio equipment in naval aircraft and carriers offers a significant COMSEC capability that should be utilized to the greatest extent practicable. All units with COMSEC capability should develop tactical doctrine designed to deny SIGINT forces access to vital intelligence. Detailed functional descriptions of COMSEC equipments are found in pertinent classified documents.

All personnel who have access to radio equipment must be briefed that certain restrictions exist on all radio transmissions to prevent disclosure of EEFIs to the enemy.

4.5 EMERGENCY CONTROL PROCEDURES

From a control standpoint, aircraft emergencies fall in the following three broad categories:

1. Communication failures.
2. NAVAID failures.
3. Other aircraft system failures.

The nature of some emergencies requires priority and/or diversionary measures. The ultimate resolution of these emergencies involves a command decision based upon the type of emergency and weather conditions in the recovery area. It is imperative that the controlling agency collect every pertinent detail that might aid in the evaluation of an emergency and keep the command and other interested agencies properly informed.

4.5.1 Initial Control Responsibility

The initial control responsibility for aircraft emergencies rests with the agency exercising control of the aircraft when the emergency occurs. Aircraft in a state of emergency within visual range of the ship will normally be controlled by the air officer. Outside the visual range of the ship, aircraft in an emergency shall be controlled by either CDC or CATCC. Aircraft in distress should not change radio frequencies if satisfactory radio contact is established.

4.5.2 Basic Procedures

The procedures for pilots to follow when experiencing communications and/or navigation equipment failures are listed in Figure 4-1. Controlling agencies shall be familiar with and alert for conditions indicating communication or navigation failures and perform the following as appropriate:

1. Attempt to establish communications with the aircraft.
2. Vector the aircraft as appropriate.

If unable to communicate with the aircraft in difficulty:

1. Identify on radar and maintain a track.
2. Vector available aircraft to join if practical.
3. Alert air operations watch officer and PriFly.
4. Broadcast instructions and essential information on normal control frequencies and guard.

Emergency procedures during penetration or letdown are covered in Chapter 6. Emergency procedures for aircraft system failures are covered in the appropriate aircraft NATOPS flight manual. Lost communication emergency squawks are listed in Figure 4-2.

Figure 4-1. Basic Emergency Procedures for Communication/Navigational Equipment Failure

TYPE OF FAILURE	FLIGHT CONDITIONS	
	VMC	IMC[1]
Transmitter failure with or without receiver failure (navigation aids serviceable).	1. Join up if possible. 2. Maintain VMC. a. Enter VMC landing pattern. b. Use standard visual signals when in range of ship. c. Watch for light signals from ship. 3. Squawk Mode III 7600, “IDENT,” and Mode I in accordance with Figure 4-2. 4. In receiving, follow instructions. 5. Broadcast intentions periodically, whether or not transmitter is known to be serviceable. 6. Tune in parent CV data-link frequency.	1. Transition to VMC if possible and continue VMC. 2. Proceed to emergency marshal. 3. Squawk Mode III 7600, “IDENT,” and Mode 1 in accordance with Figure 4-2. 4. Watch for joinup. 5. Hold at emergency marshal until EEAT. 6. Commence approach at EEAT. Squawk in accordance with Figure 4-2. 7. If receiving, follow instructions. 8. Broadcast intentions periodically whether or not transmitter is known to be serviceable. 9. Tune in parent CV data-link frequency.
Navigation aids and transmitter failures, with or without receiver failure.	1. Perform same procedures as for communications failure, or 2. When position is unknown: a. Navigate by DR to best position. b. Squawk in accordance with Figure 4-2 or EMERGENCY as required. c. Fly appropriate triangles. d. Watch for join up. 3. Tune in parent CV data link frequency. 4. If all above fails, bingo to nearest suitable field at appropriate fuel state.	1. Transition to VMC if possible and maintain VMC. 2. Navigate by DR to best position. 3. Squawk in accordance with Figure 4-2 or EMERGENCY as required. 4. Fly appropriate triangles. 5. Watch for joinup. 6. If receiving, follow instructions. 7. Broadcast intentions periodically whether or not transmitter is known to be serviceable. 8. Tune in parent CV data-link frequency.

NOTE:
1. All procedures are for single aircraft. When in company, VMC or IMC, remain in company and use hand signals between aircraft.

Figure 4-2. Lost Communication Emergency Squawks

Mode III — Lost communications (transmitter and/or receiver) squawk Code 7600. Emergencies squawk 7700.
Mode I — The following codes will amplify difficulties in conjunction with a Code 7600 or 7700. No receiver shall mean that the primary UHF, auxiliary receiver, and UHF/VHF Guard receiver are inoperative. If any receiver is operative, the controller is capable of controlling the aircraft utilizing IFF standby squawks and/or aircraft turns to acknowledge receipt of instructions.

Note

Below 2,500 feet, pilots must be aware of the dangers of changing IFF codes.

1. HEFOE Squawks.

Mode I		Mode III
First digit	Second digit	
0 — OK	0 — No radio reception ACLS/ICLS OK	
	1 — No radio reception, TACAN OK	
1 — Hydraulic		7700/7600 (with HEFOE code, use Code 7700)
2 — Electrical	2 — No radio reception, ADF OK	
3 — Fuel	3 — Radio reception, OK, no NAVAIDs	
4 — Oxygen	4 — No radio reception, JPALS OK	
5 — Engine		

2. Assistance Required Squawks.

All 7 — Mode I squawks indicate no receiver and no NAVAID(s).

Mode I	Mode III
70 — Desire tanker to join	Fuel on board (up to 7,400)
71 — Intend bingo	
72 — Desire aircraft to assist	

3. Limited Communication Squawks.

Require a 1-minute cycling of Mode III from 7600/7700 to desired channel.

Mode I	Mode III
60 — Aux. Rec. (ADF) channel _____	Channel usable (0100-2000, and 2100 = Guard)
61 — No NAVAID(s) Rec. on channel _____	
62 — TACAN OK. Rec. on channel _____	
63 — JPALS OK. Rec. on channel _____	

CHAPTER 5

Launching Aircraft

5.1 PRELAUNCH PROCEDURES

For detailed prelaunch procedures, refer to and comply with the procedures in NAVAIR 00-80T-120 (CV Flight/Hangar Deck NATOPS Manual).

5.1.1 Manning Aircraft

Approximately 45 minutes before launch time, flightcrews will be ordered to man aircraft. When called, they shall proceed to their aircraft via the designated route and conduct preflight inspections as expeditiously as safety permits.

5.1.1.1 Weight Chits

1. No later than 45 minutes prior to a launch, each squadron shall furnish the Catapult Officer with a weight chit listing the computed weight of each aircraft scheduled.
2. Weight chits shall be locally prepared and shall contain the following information:
   a. Squadron.
   b. Date.
   c. Launch event number or time of scheduled launch.
   d. Aircraft side number.
   e. Basic weight.
   f. Fuel weight.
   g. Ordnance/external store weight.
   h. Gross weight.
   i. Signature of person filling out chit.
   j. Flap setting for E-2/C-2.
   k. CRT/MRT for F/A-18 or F-35C.
   l. FCF aircraft.

5.1.2 COD/VOD Aircraft

COD/VOD aircraft passengers shall be escorted to and from the aircraft by the ATO or his assistant. The ATO or his assistant shall remain with the passengers until they have been embarked. Passengers and cargo will not be offloaded until the ATO or his assistant is present. Flight deck survival equipment (cranial helmet, goggles, and floatation equipment) shall not be removed until passengers are well clear of the hazards of the flight deck environment.

WARNING

- For offloading passengers and cargo, both engines of the COD should be shut down. At a minimum, the engine on the same side of the entrance hatch shall be secured.
- The ramp shall not be opened/closed externally without confirmation from the aircraft commander.
- The Mk 1 life preserver, vest type (floatcoat) with auto inflator unit assembly is not authorized for use aboard aircraft.

5.2 LAUNCHING FIXED-WING AIRCRAFT

5.2.1 Engine Start and Turnup

Prior to starting engines, the air officer shall issue appropriate orders or information over the flight deck announcing system to ensure all prestart preparations are completed and all personnel on the flight deck are alerted.

Note

The mechanical latching of weapons on aircraft racks/launchers shall be completed before the engine(s) on that aircraft is started for launch.

The air officer shall ensure all flight deck personnel are indoctrinated in and adhere to the positioning of aircraft and aircraft starting units so that the established minimum distances are maintained. Pilots and aircrews shall be made aware of proper positioning criteria. The responsibility for safe starting of all aircraft rests with the air officer. All personnel shall follow the prescribed procedures when operating aircraft and aircraft starting units. All unsafe starting conditions shall immediately be called to the attention of cognizant personnel.

WARNING

Hot exhaust from aircraft and aircraft starting units is a serious hazard when operating in close proximity to aircraft, aircraft components, fuel, weapons, equipment, external store CADs, and personnel.

Engines shall be started only on signal and under the positive control of PriFly. During the starting evolution, the aircraft handling crew shall remove the towbar if necessary for accomplishment of preflight checks and the plane captain shall assist the pilot as necessary with preflight checks. Towbars shall remain on or in the immediate vicinity of aircraft parked in the landing area or in a position that fouls the deck until that aircraft is ready for taxi.

WARNING

Prior to start, ensure nosewheels are not cocked. Cocked nosewheel may pose a threat to flight deck personnel.

The plane directors shall monitor the aircraft throughout the warmup and checkout period. Control is assumed by the plane captain for preflight checks only.

Turboprop aircraft shall not be turned up above 1,500 shaft horsepower (SHP) without specific clearance from a flight deck director. The pilot shall request clearance to turn up by giving his director the one finger turnup signal. The director, after checking chocks and tiedowns and ensure the area behind the aircraft is clear, shall return the signal, thereby clearing the pilot for turnup.

Note

Clearance for turnup shall not be given by anyone other than a flight deck director.

While an engine is turning up at high power, the director shall continuously check the area behind the aircraft. The pilot shall frequently look at the director to ensure the “all clear” signal is still being given. After completing all poststart checks, the pilot shall signal the director, indicating the status of the aircraft. The director will relay the signal to the officer or petty officer in charge of that area of the flight deck.

5.2.2 Final Preparations for Launch

Approximately 15 minutes before launch, the air officer will initiate the following prelaunch checklist:

1. Wind — Verify the estimated wind available for launch and notify bridge of maximum/minimum wind requirements.
2. List — Check ship's list to ensure a level deck.
3. Jet blast deflector cooling — Ensure saltwater cooling is functioning on all active JBDs.

If aircraft are to be deck launched, the launching officer shall compute the required deck run and confirm it with the air officer. The catapult launching officer shall inspect the catapult track(s) and adjacent flight deck area to ensure they are clear of chocks, towbars, or other equipment. By this time, the following personnel should have manned their launch stations:

1. LSO
2. Arresting gear personnel
3. ILARTS operator
4. Lens operator
5. Mobile firefighting equipment operators.

5.2.3 Ordnance Arming

When an aircraft carrying ordnance requires arming, the aircraft shall be taxied into the arming area. Aircraft shall be stopped prior to positioning the launch bar over the shuttle; JBDs shall be in the raised position and aircraft properly configured for flight. The director shall ensure that all personnel are clear and then shall direct the aircrew's attention to the Ordnance Safety Petty Officer for arming.

WARNING

- Aircraft shall not have launch bar over the shuttle until the aircraft is armed and properly configured for flight.
- If the launch is suspended after forward firing weapons have been armed, ensure that those weapons are de-armed prior to a pushback/breakdown of the aircraft, or when the area in front of the aircraft cannot remain clear until the launch.

5.3 LAUNCHING AIRCRAFT (CONVENTIONAL/ICCS DECKEDGE MODE)

5.3.1 Taxiing/Spotting Aircraft on Catapults

1. When positioning an aircraft on the catapult, the Director shall be acutely aware of the activities of the catapult crew, and shall control the aircraft's speed and movement in such a way that personnel safety will not be jeopardized.

a. Pilots shall guard against the tendency to use excessive power, which invariably results in roughness and poor control and makes accurate catapult spotting difficult.

b. Jet Blast Deflectors shall be raised as appropriate when the tail of the aircraft is clear of the arc of JBDs.

WARNING

- If a JBD cannot be raised, the commanding officer's approval is required for continued catapult operation.
- Personnel shall not work or transit immediately behind a JBD with aircraft at launch power on the catapult.
- During simultaneous recovery and Catapult No. 2 operations, deck-edge mode, the Catapult No. 2 Deckedge Operator and JBD Operator (if applicable) are authorized to man the deckedge station for operations and shall not be considered fouling the landing area. The Deckedge Operator and JBD Operator shall be aware and alert during recovery operations.

CAUTION

Often aircraft on catapult No. 4 block the view of the No. 3 JBD Operator. All JBD Operators/Safety Observers shall ensure aircraft clearance is sufficient prior to raising or lowering a JBD. Catapult No. 3 requires a JBD Safety Observer at all times. Bow catapults utilizing JBD deckedge control boxes require one JBD Safety Observer per catapult. JBD Safety Observers shall be positioned on the side of the JBD farthest away from JBD Operator.

2. As the aircraft is positioned on the catapult, the squadron Plane Checkers shall inspect the aircraft to ensure it is properly configured and ready for flight.

WARNING

Aircraft shall not be taxied across the shuttle or reach a position where the launch bar can engage the spreader until the aircraft is ready for flight in all respects. This includes gross weight confirmed, wings spread and locked, flaps set, ordnance armed, green beacon, CSV set, and the catapult in first ready/cat ready.

3. The Director shall stop the aircraft at the lead-in track wye area.

   a. He shall then signal the pilot to disengage steering by touching the end of his nose with his forefinger and then sweeping his arm downward in the direction of intended aircraft movement.

4. The Holdback Operator shall inspect the RRHB for proper reset indications prior to installation on each aircraft.

5. The Holdback Operator shall install the holdback bar and check the tension bar/release unit for the proper seating position (not cocked).

WARNING

An incorrectly installed holdback bar may cause premature release during tensioning or when full thrust of the aircraft is applied.

6. The Director shall then give the Lower Launch Bar signal to the pilot upon direction of the TSPO.

WARNING

Holdback bars and/or launch bars shall not be installed/lowered before the aircraft reaches the lead-in wye area. Excessive wear or burring may occur as the bars pass over the nonskid, or the bars may hang up in the track. If an imbalance of the bar occurs, equipment damage or personnel injury may result.

7. As the aircraft is taxied forward, the TSPO shall ensure the launch bar is properly positioned and the buffer slider is in its full aft position.

WARNING

To avoid possibility of premature tension bar failure, do not actuate “BUFFER FWD" or “BUFFER AFT" pushbuttons during the aircraft buffer stroke.

CAUTION

Aircraft taxi speed shall not exceed 4 mph while approaching the buffer.

8. Prior to taxiing aircraft over the shuttle (launch bar on top of shuttle), the TSPO shall re-verify positive reset indication of RRHB. Positive RRHB reset is only established when the following conditions exist:
   a. Strain release rod groove is completely visible.
   b. Spring retainer groove is partially covered by housing.
   c. Painted stripe area is completely covered from view.

Note

TSPO shall indicate to Catapult Shooter/Safety Observer that the RRHB has been inspected by providing a thumb's up signal during the day and vertically raised white stubby wand at night.

9. The Director shall direct the pilot to taxi slowly over the shuttle spreader upon TSPO signal.
10. If aircraft strut(s) must be extended, the Director shall signal the pilot to extend struts.

5.3.2 Tensioning Aircraft

1. Two minutes prior to the launch, the Catapult Officer shall signal to the pilots, directors, and catapult crews, “TWO MINUTES" by pointing to his wrist and extending two fingers.
   a. Deckedge Operators shall pass the word to their respective crews via voice communication system.

b. From that time until the end of the launch, strict voice communication system discipline shall be maintained.

2. Upon receiving the 2-minute warning, the Console Operator/CCP shall check all operating indications.

   a. When satisfied all conditions are normal and, if applicable, select FIRST/CAT READY.

   b. Pass the word “FIRST READY/CAT READY."

3. The Deckedge Operator, upon observing the FIRST READY/CAT READY light and hearing the word passed, shall give the FIRST READY/CAT READY signal, one hand raised high over head with forefinger extended, to all topside personnel.

4. The Catapult Officer shall signal the TSPO to tension the aircraft.

WARNING

When launching from the waist catapults, the GO/NO-GO chart shall be consulted prior to tensioning each aircraft. Catapult officers shall not attempt to memorize criteria. Aircraft on waist catapults shall not be put in tension as long as no-go situation exists.

5. Prior to taking tension, the TSPO shall ensure:

   a. Aircraft is properly configured for flight.

   b. Catapult is in FIRST READY/CAT READY.

   c. JBDs are raised and personnel are properly positioned.

   d. Only the Topside Petty Officer and UI (if applicable) are under the aircraft prior to taking tension.

   e. Check for a clear deck forward.

WARNING

Aircraft tiedown rings shall not be used as a handle while placing aircraft in tension.

Note

For Case III launches, the Catapult Officer shall maintain absolute control of the launch sequence; therefore, aircraft shall NOT be tensioned except upon signal from the Catapult Officer.

   f. Ensure bow/angle lights are green.

Note

If bow/angle lights are inoperable a visual confirmation of a clear deck is defined as thumbs up (day) or green wand (night) by the safety operator.

6. Once all requirements are met, the TSPO shall signal to the Director to TAKE TENSION by sweeping one arm and pointing forefinger (day), white stubby flashlight (night), in forward direction of launch and held until tension is taken.

7. The Director, upon observing the TAKE TENSION signal from the TSPO, shall signal the pilot to HOLD BRAKES.

8. The Director shall check forward and aft of the shot line, ensure that JBDs are raised, and all personnel (director included) in the vicinity of the launching aircraft are laterally clear, then signal the pilot to RELEASE BRAKES and Deckedge Operator to TAKE TENSION.

CAUTION

Aircraft directly behind the JBD shall be positioned and properly configured for military-rated power of the launching aircraft.

   a. He shall hold the tension signal until passing control to the Catapult Officer.

   b. The Deckedge Operator shall depress BRIDLE TENSION on the Director's tension signal.

9. As the Deck edge Operator presses BRIDLE TENSION, he shall verbally relay the message to the Console/CCP Operator via the voice communication system, saying the words “TAKING TENSION"; these shall be the last words passed until after the aircraft is launched.

10. Immediately after taking tension, the Deckedge Operator shall return the FIRST READY/CAT READY signal.

11. After tension is taken, the TSPO shall inspect the launch bar seating in the spreader, and inspect the seating of the tension bar/repeatable release element prior to exiting from under the aircraft, and giving the Catapult Officer a thumbs up.

WARNING

It is mandatory to positively determine that the aircraft launch bar is properly seated in the nose gear launch shuttle spreader as shown after tension is taken (see Figure 5-1). Mispositioning of the aircraft launch bar can result in the launch bar separating from the shuttle spreader during launch. F/A-18 aircraft shall not be launched with improper or missing launch bar paint schemes.

CAUTION

It is mandatory to positively determine that the E-2C/D aircraft nose-tow catapult crank assembly handle is properly seated after tension is taken (see Figure 5-2). An improperly seated handle can result in the aircraft launch bar not retracting after launch and damage to the crank assembly.

12. If all is satisfactory, the TSPO shall exit from under the aircraft, giving a thumbs-up signal (day) or holding a steady white stubby wand (night) vertical.

   a. The signal shall be held until the aircraft is launched.

   b. If anything is wrong, the TSPO shall exit from under aircraft immediately and give the suspend signal.

5.3.3 Launch

1. As the ship approaches the launch course, the Air Officer shall monitor the wind velocity.

   a. Upon receiving permission from the bridge to launch aircraft, Air Officer shall make a final check to ensure the relative wind is within the envelope prescribed in the applicable launching bulletin. This shall be accomplished before changing the rotating beacon(s) from red/amber to green, thereby clearing the Catapult Officer to begin launching.

2. The Centerdeck Operator shall closely monitor the anemometer, ensuring it is within operating limits as established by the Catapult Officer.
   a. If all indications are within limits, the Centerdeck Operator shall signal by holding a thumbs up (day) or steady white stubby wand (night) vertical.
   b. If not, he shall give the suspend signal.
3. Prior to taking control of the aircraft, the Catapult Officer shall:
   a. Observe a green rotating beacon.
   b. Check the wind and crosswind conditions.
   c. Verify CSV setting.
   d. Check off-center distance and aircraft alignment.
   e. Check nose wheel cock.
   f. Observe deck pitch.
   g. Ensure JBDs are raised and all personnel are clear of aircraft, jet exhaust, or prop wash.
   h. Check wing and tail locks.
   i. Check appropriate flap, slat, and trim settings.
   j. Ensure applicable canopies closed and locked.
   k. Ensure landing gear, ejection seat, and ordnance safety pins are removed.
   l. Ensure access panels are secured.
   m. Observe thumbs up (day) or steady vertical white stubby wand (night) from TSPO.
4. When all these conditions have been met and the Catapult Officer considers the aircraft and catapult ready for launch, he shall accept control of the aircraft from the Director.

WARNING

The Director shall not pass control of the aircraft until all personnel are clear of the aircraft.

5. Once the Catapult Officer has control of the aircraft, he shall give the FINAL TURNUP signal.
6. The pilot, upon seeing the FINAL TURNUP signal, shall apply full military power as prescribed in the applicable NATOPS flight manual. Pilots shall keep their feet off the brakes.

WARNING

In the event of a suspend, the Catapult Officer shall not signal the pilot to throttle back until he has positively determined that the catapult shuttle is forward of the launch bar. If the launch bar cannot be raised without sending personnel under the turned-up aircraft, an emergency condition exists. The Catapult Officer shall positively determine that the catapult is in a SAFE condition, then give pilot the THROTTLE BACK signal to permit safe removal of the aircraft.

7. The Deckedge Operator, upon observing the FINAL TURNUP signal, immediately presses the STANDBY/MIL PWR pushbutton.

a. As soon as the STANDBY/MIL PWR light comes on at the deckedge control panel, he holds two fingers overhead.

Note

When catapults are being operated as interlocked pairs, the first catapult to reach STANDBY/MIL PWR shall be fired or suspended before the other catapult can attain STANDBY/MIL PWR.

8. For non-ICCS ships, the Console Operator, observing the STANDBY light on, immediately checks all gauges and lights, and shall verify the position of the CSV by comparing the position readout on the console with the mechanical counter on the CSV. If everything is satisfactory, he places the catapult in FINAL READY.

WARNING

Silence shall be maintained on voice communication system from the time the taking tension is passed until the launch has been completed, or if a suspend or hangfire occurs, in order that signals between stations are not misinterpreted.

9. For non-ICCS ships, when the catapult is in FINAL READY and the Deckedge Operator observed the FINAL READY (red) light, he signals the catapult is in FINAL READY by raising both arms overhead with hands open. This action also prevents him from inadvertently depressing the FIRE pushbutton.

WARNING

The Deckedge Operator shall not lower his hands for any reason other than to depress the FIRE or SUSPEND pushbutton.

10. For non-ICCS ships, if the launch is to be made at Combat Rated Thrust (CRT), the Catapult Officer, upon observing that the catapult is in FINAL READY, shall give the CRT/AFTERBURNER signal.

11. For ICCS ships using Deckedge Mode, when the CCP Operator observes the military power light on, he shall check all gauges and lights.

WARNING

Silence shall be maintained on the voice communication system from the time BRIDLE TENSION pushbutton is pressed until launch is completed or a suspend/hangfire occurs.

12. For ICCS ships using Deckedge Mode, if CRT is required, the Catapult Officer gives the CRT signal.

    a. The Deckedge Operator then shall press the combat power pushbutton.

13. For ICCS ships using Deckedge Mode, after the Catapult Officer salutes the pilot, the Deckedge Operator shall depress the FINAL READY pushbutton.

    a. After observing the final ready light, the Deckedge Operator shall give the final ready signal.

WARNING

The Deckedge Operator shall not lower his hands for any reason other than to depress the FIRE or SUSPEND pushbuttons.

14. The squadron Plane Checkers shall position themselves so they may observe the lighting of the afterburners and normal nozzle action.

    a. The Plane Checkers shall withhold giving the thumbs up (day) or steady vertical blue stubby wand (night) signal until all conditions are normal.

    b. Should an afterburner fail to ignite, the Plane Checker shall give the SUSPEND signal.

15. With the aircraft at take-off power, the pilot shall make his final checks. If everything is satisfactory, he shall position his head against the seat headrest and shall indicate he is ready by turning his head slightly toward the Catapult Officer and by executing a right- or left-hand salute.

    a. If, for any reason, the pilot desires to abort the launch, he shall so indicate by transmitting “SUSPEND, SUSPEND CATAPULT NO. ____," and by shaking his head negatively (day) and not turning on the navigation lights (night). External/navigation lights shall be turned off if already on.

    b. In such cases the Catapult Officer shall SUSPEND.

WARNING

- Once the aircraft is tensioned on the catapult and turned up to take-off power, the pilot shall not adjust his visor nor make any other movement that might be mistaken for a salute until he is ready to be launched.
- The Air Officer shall not rely on changing rotating beacons from GREEN to RED to suspend the launch, but shall activate the SUSPEND pushbutton.

16. Upon receiving the pilot's salute (day) or navigation lights on (night), but before giving the signal to FIRE, the Catapult Officer shall return the salute (day) or extend a green wand overhead (night) and:

    a. Check for a green rotating beacon.

    b. Make a final scan of the aircraft.

    c. Check the position of the flight controls.

    d. Ensure the aircraft sounds normal at take-off power.

    e. Ensure the catapult is still in final ready.

    f. Check the Centerdeck Operator for a thumbs up (day) or steady white stubby wand (night) held vertically, indicating wind is within limits.

    g. Check squadron Plane Checkers for a thumbs up (day) or steady blue stubby wand (night) held vertically.

    h. Check TSPO for a thumbs up (day) or steady white stubby wand (night) held vertically.

    i. If the deck is pitching, the launch shall be timed and the fire signal given so that the deck will be level, pitching up, or at the top of the pitch cycle at the completion of the catapult power stroke.

    j. Check for airborne aircraft traffic (waveoff, bolter, etc.) to preclude the possibility of collision between the airborne and the launching aircraft.

    k. Check Bow/Angle Observer for GO signal.

WARNING

Timing will vary with the cycle of the deck, and type of aircraft. Deckedge Operators and pilots shall be briefed to not change procedures in an attempt to time the shot themselves.

17. When the Catapult Officer determines the catapult, aircraft, and pilot are ready in every respect, he shall give the signal to FIRE the catapult by sweeping his raised hand down in the direction of the launch, touching the deck, and returning his hand to the horizontal position in the direction of launch.

WARNING

- The Catapult Officer and all personnel in the vicinity of the launching aircraft shall remain clear or in the crouched position and laterally clear until the signaled aircraft has passed their position or until the Catapult Officer has executed a SUSPEND/HANGFIRE and the catapult is safe.
- All personnel except centerdeck operator in the vicinity of launching aircraft shall remain in a position prohibiting the aircraft wing from passing over them during an aircraft launch.

18. The deck edge operator, upon observing the catapult officer touch the deck and returning his hand to the horizontal position in the direction of the launch shall check the deck, aircraft, and catwalk (forward and aft) noting the safeties (bow/angle) signal, thumbs up (day) or green wand/light (night), then lower hand and depress the fire push button.

WARNING

The Deckedge Operator shall not anticipate the FIRE signal, as the Catapult Officer or topside personnel may initiate a SUSPEND at any time prior to the Deckedge Operator depressing the FIRE pushbutton.

19. If any deficiency in aircraft hook-up is noted by the Deckedge Operator or if the deck and catwalk forward areas are not clear, he shall not FIRE but SUSPEND and notify the Catapult Officer of the deficiency.

    a. Anytime the Deckedge Operator suspends, he shall signal SUSPEND by crossing arms (day) or holding red wand vertical overhead (night), to the Catapult Officer.

WARNING

- The Catapult Officer, after touching the deck, shall monitor the pilot for any signs of a SUSPEND. At night, he shall monitor the navigation lights ensuring they remain on.
- It is extremely important that all personnel stationed in the catwalk remain as low as possible and attempt to hug the inboard catwalk bulkhead when the catapult is fired. This position will offer the most protection from the jet blast and potential objects that may fall off the aircraft.

Figure 5-1. Proper Positioning After Tensioning

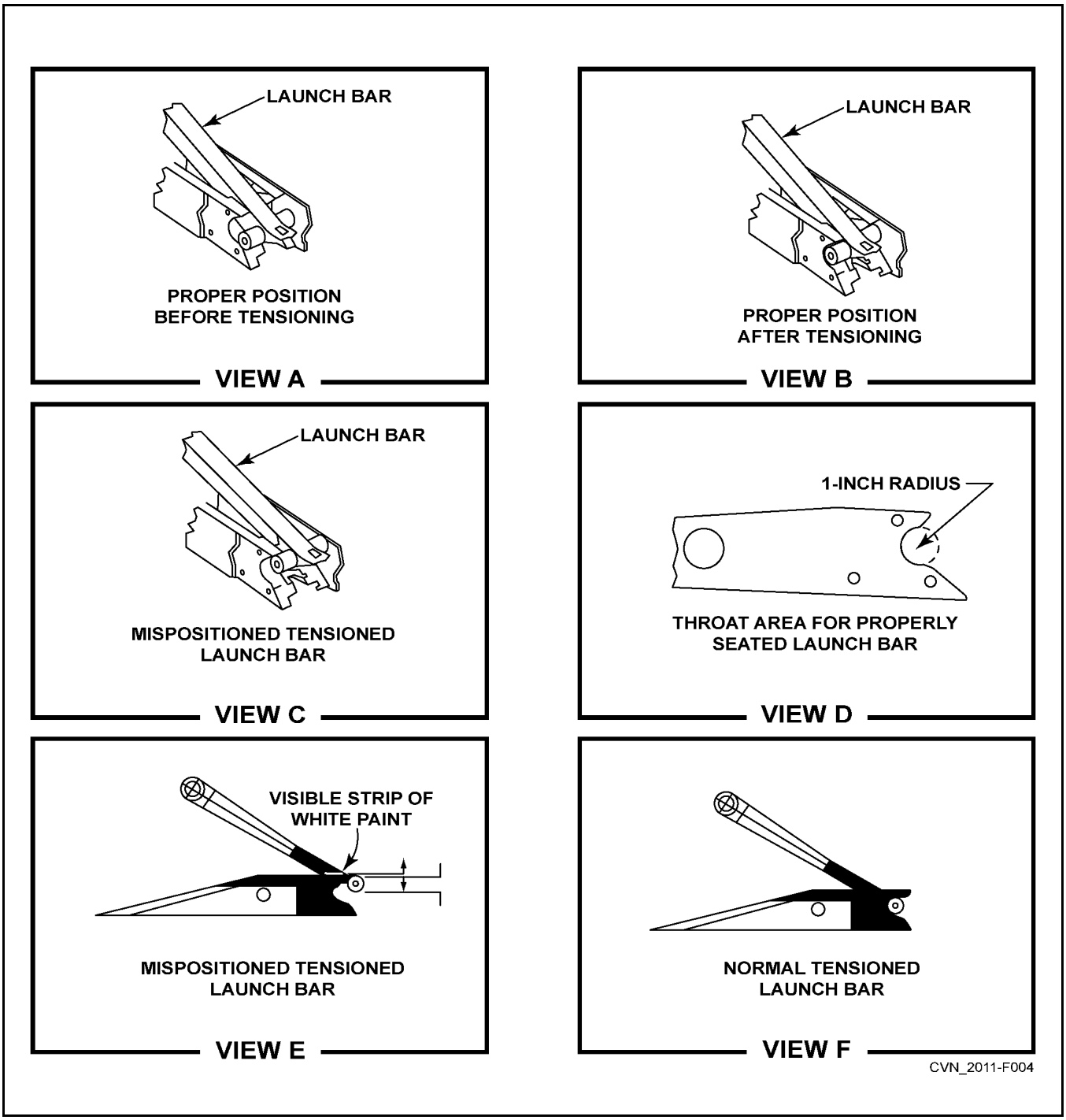

Figure 5-2. E-2C/D Aircraft Nose-Tow Catapult Crank Assembly Handle Seating

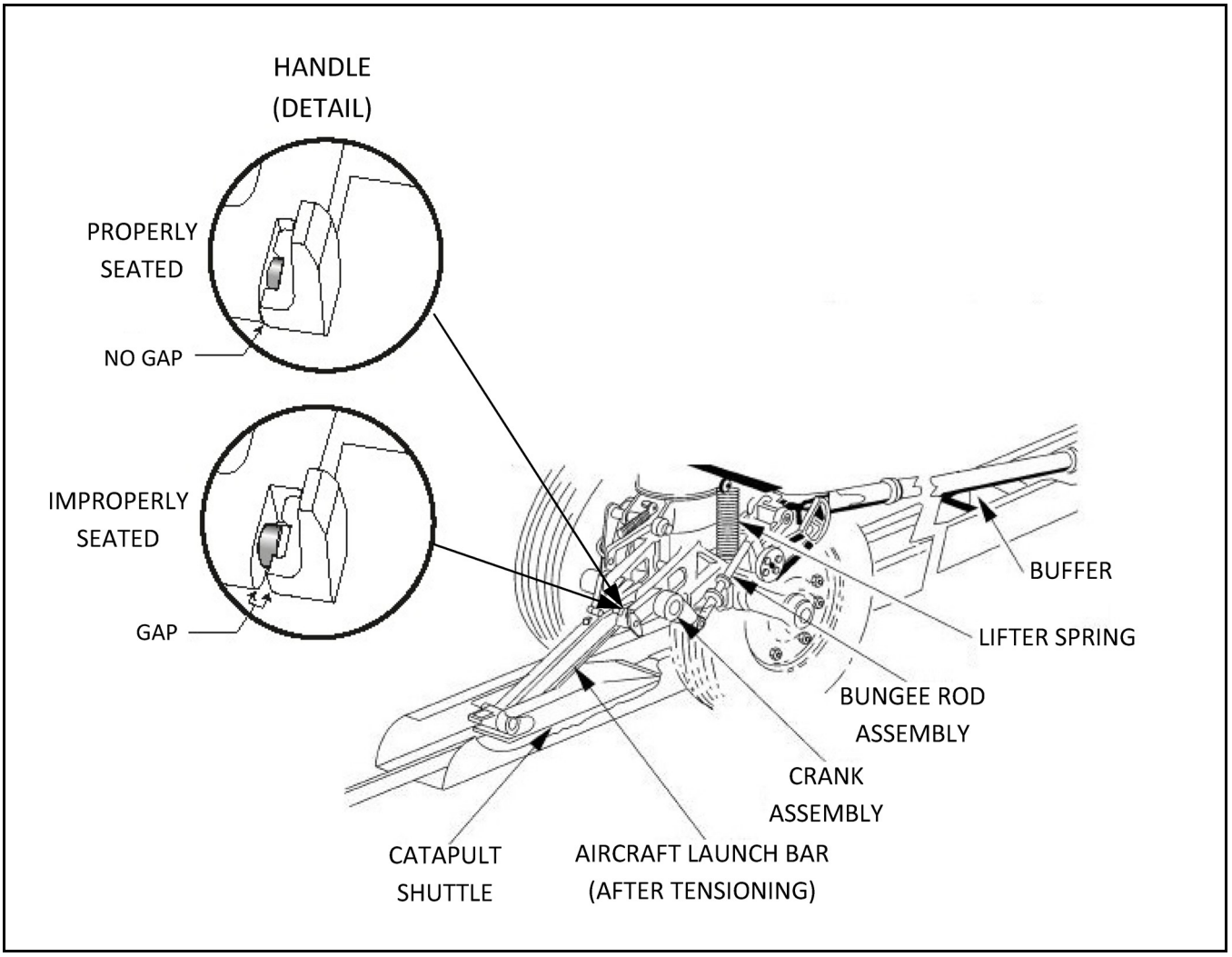

5.3.4 Launch Complete

WARNING

During normal operations, never press the LAUNCH COMPLETE pushbutton following a SUSPEND. Except for no-load launches and in cases where it is known positively that a launch is complete, the LAUNCH COMPLETE pushbutton shall be pressed only with permission of the Catapult Officer.

1. After ensuring the launch is complete, the Console/CCP Operator shall prepare for the next launch.
   a. The Deckedge Operator, after ensuring the track is clear, shall retract the shuttle.
2. Subsequent aircraft shall be spotted and tensioned as rapidly and safely as possible.

5.4 LAUNCHING AIRCRAFT (ICCS)

5.4.1 Taxiing/Spotting Aircraft on Catapults

1. When positioning an aircraft on the catapult, the Director shall be acutely aware of the activities of the catapult crew, and shall control the aircraft's speed and movement in such a way that personnel safety will not be jeopardized.

   a. Pilots shall guard against the tendency to use excessive power, which invariably results in roughness and poor control and makes accurate catapult spotting difficult.

   b. As the aircraft approaches the catapult, the Director shall signal the pilot to lower flaps.

   c. Jet Blast Deflectors shall be raised as appropriate when the tail of the aircraft is clear.

WARNING

- If a JBD cannot be raised, the commanding officer shall authorize the catapult's use.
- Personnel shall not work or transit immediately behind a JBD with aircraft at launch power on the catapult.

CAUTION

Often aircraft on Catapult No. 4 block the view of the Catapult No. 3 JBD Operator. All JBD Safety Observers/Operators shall ensure aircraft clearance is sufficient prior to raising or lowering a JBD.

2. As the aircraft is positioned on the catapult, the squadron Plane Checkers shall inspect the aircraft to ensure it is properly configured and ready for flight.

WARNING

Under normal operating conditions, aircraft shall not be taxied to a position where the launch bar can engage the spreader until the aircraft is ready for flight in all respects. This includes gross weight confirmed, wings spread and locked, flaps set, ordnance armed, green beacon, CSV set, and the catapult in first ready/cat ready.

3. The Director shall stop the aircraft at the lead-in track wye area. He shall then signal the pilot to disengage steering by touching the end of his nose with his forefinger and then sweeping his arm downward in the direction of intended aircraft movement.

   a. The Holdback Operator shall inspect the RRHB for proper reset indications prior to installation on each aircraft.

   b. The Holdback Operator shall install the holdback bar and check the tension bar/release unit for the proper seating position (not cocked).

4. The Director shall then give the Lower Launch Bar signal to the pilot upon direction of the TSPO.

WARNING

Holdback bars and/or release units should not be installed/lowered before the aircraft reaches the lead-in wye area. Excessive wear or burring may occur.

5. As the aircraft is taxied forward, the TSPO shall ensure the launch bar is properly positioned and that the buffer slider is in its full aft position.

WARNING

To avoid the possibility of premature tension bar failure, do not actuate “BUFFER FWD" or “BUFFER AFT" pushbuttons during the aircraft buffer stroke.

CAUTION

Aircraft taxi speed shall not exceed 4 mph while approaching the buffer.

6. Prior to taxiing aircraft over the shuttle (launch bar on top of shuttle), the TSPO shall re-verify positive reset indication of RRHB. Positive RRHB reset is only established when the following conditions exist:
   a. Strain release rod groove is completely visible.
   b. Spring retainer groove is partially covered by housing.
   c. Painted stripe area is completely covered from view.

Note

TSPO shall indicate to Catapult Shooter/Safety Observer that the RRHB has been inspected by providing a thumb's up signal during the day and vertically raised white stubby wand at night.

7. The Director shall direct the pilot to taxi slowly over the shuttle spreader upon TSPO signal.

WARNING

An incorrectly installed holdback bar can cause premature disengagement during tensioning or when full thrust of the aircraft is applied.

5.4.2 Tensioning Aircraft

WARNING

- When the Catapult Officer observes the aircraft type, weight, and side number, he determines the capacity selector valve setting desired. He shall relay this information to the CCP Operator for confirmation via the ICCS monitor, who shall check the applicable Launching Bulletin. If the setting desired by the Catapult Officer is correct, the CCP Operator shall press the CSV setting pushbutton. If a mismatch occurs with the command setting and any remote readout, the Catapult Officer/CCP Operator shall suspend and down the catapult until the malfunction is corrected.
- Operation of the catapult in the defeat interlock mode shall be accomplished only with the Commanding Officer's permission. If the defeat interlock mode is used, instructions delineated in the applicable catapult operations manual (NAVAIR 51-15 ABB Series) shall be followed.

1. If the Monitor observes a red malfunction or status light, or the catapult area fouled, he shall press the suspend pushbutton and notify the Catapult Officer.
2. The CCP Operator shall continually check his panels and ensure that all lights and readouts indicate a “go" condition. If a “no-go" condition exists, he shall press the suspend pushbutton and notify the Monitor.
3. When all conditions are satisfactory prior to tensioning aircraft, the green CAT RDY light at the Catapult Officer's Console and white lights at the CCP and Monitor's station shall be illuminated. If the CAT RDY lights are not illuminated, the cause shall be investigated and corrected.

WARNING

If the cat ready condition is lost even momentarily, the catapult officer, monitor or CCP operator shall suspend the catapult and determine the cause. When the condition causing the loss of cat ready has been corrected, the suspend shall be removed. At no time shall the catapult officer place the catapult in tension without first reconfirming the CSV setting and ensuring a cat ready condition exists.

4. Prior to signaling the Catapult Safety Observer to initiate the hook-up, the Catapult Officer shall ensure:
   a. The CSV is set in accordance with the appropriate launching bulletin.
   b. Check for a clear deck forward.
   c. Wind over the deck and crosswinds are within limits and in accordance with applicable launch bulletins.
   d. Green rotating beacon.
   e. In CAT RDY.
   f. Aircraft configured for flight.
   g. The “catapults interlocked" light is illuminated unless intentionally operating in the “catapults not interlocked" mode.
   h. GO/NO GO charts are reviewed.
   i. When all conditions are satisfactory, the Catapult Officer shall signal the Catapult Safety Observer to hook up the aircraft.

Note

For Case III launches, the Catapult Officer shall maintain absolute control of the launch sequence, and aircraft shall not be tensioned except upon the Catapult Officer's signal.

5. After receiving the hook-up signal from the Catapult Officer, and prior to signaling the TSPO to initiate hook-up, the Catapult Safety Observer shall ensure that:
   a. Check for a clear deck forward.
   b. JBDs are raised and aircraft immediately aft of the JBD are configured to sustain turbulence from launching aircraft.
   c. Aircraft is properly configured for flight.
   d. Aircraft is properly armed (if applicable).
   e. Green rotating beacon.
   f. The TSPO is giving thumbs up (day) or steady white stubby wand (night) indicating ready for hook-up.
6. When all conditions are satisfactory, the Catapult Safety Observer shall give the hook-up signal to the TSPO.
7. When the TSPO receives the hook-up signal from the Catapult Safety Observer, he shall ensure the following prior to signaling tension:
   a. In case of nose gear launch aircraft, ensure the holdback is properly seated in the buffer hooks and the aircraft has fully engaged the nose gear launch unit.
   b. JBDs are raised and personnel properly positioned.
   c. Check for a clear deck forward.
   d. Squadron Plane Checkers are clear from under the aircraft.
   e. Catapult deckedge red suspend light not illuminated.

WARNING

Aircraft tiedown rings shall not be used as handles while placing an aircraft in tension.

8. The TSPO shall then give the tension signal by sweeping one arm and pointing forefinger (day), white stubby flashlight (night), in forward direction of launch to the Catapult Safety Observer and Director and held until tension is taken.
9. After receiving the tension signal from the TSPO, the Director shall:
   a. Check forward and aft ensuring all personnel (director included) in the vicinity of the launching aircraft are laterally clear and aircraft are clear of the catapult “safe shot line."
   b. Ensure JBDs are raised and personnel properly positioned.
   c. Signal the pilot to release brakes followed by the tension signal.
   d. Once TSPO has exited, pass control of the aircraft to the Catapult Safety Observer.
10. After receiving the tension signal from the Director, the Catapult Officer shall depress the tension pushbutton, paying particular attention to proper engagement of the shuttle and launch bar, as the shuttle strokes forward. After tension is taken, the TSPO shall perform the following:
    a. For nose tow aircraft: After tension is taken, the TSPO shall inspect the seating of the launch bar in the spreader, and inspect the seating of the tension bar/repeatable release element prior to exiting from

under the aircraft. Give the Catapult Safety Observer a thumbs up (day) or steady white stubby wand (night) held vertically if all conditions are satisfactory.

WARNING

It is mandatory that it be positively determined that the aircraft launch bar is properly seated in the nose gear launch shuttle spreader as shown in Figure 5-1 after tension is taken. Mispositioning of the aircraft launch bar can result in the launch bar prematurely separating from the shuttle spreader during the launch. F/A-18 aircraft shall not be launched with improper or missing launch bar paint schemes.

11. Before tensioning, the CCP Operator shall verify the position of the CSV by comparing the digital readout on the CCP with the mechanical counter on the CSV.

    a. After ensuring both readouts match, the CCP Operator shall repeat the CSV settings to the Monitor over the voice communication system.

    b. The Monitor shall advise the Catapult Officer of the CSV setting.

12. The CCP Operator shall verify the Catapult Officer's CSV setting by referring to the appropriate launch chart, and the wind indicator. If the CCP Operator disagrees with the CSV setting selected by the Catapult Officer, he shall suspend.

WARNING

Independent computations of CSV settings by CCP Operators cross-check CSV settings by Catapult Officers; therefore, it is essential that CCP Operators be fully trained on launch bulletin usage and CSV computation.

5.4.3 Launch

1. After observing the TSPO exiting from under the aircraft, giving a thumbs-up (day) or steady white stubby wand (night) signal, the Catapult Officer shall depress the military power pushbutton and, if applicable, the combat power pushbutton.

2. The pilot shall apply full take-off power and, if applicable, afterburner when the deck signal lights are illuminated and/or after Catapult Safety Observer's signal.

Note

The military and combat power deck lights are located on the ICCS for catapults No. 1, 3 and 4. The military and combat power deck lights for catapult No. 2 are located on the forward deck edge left of the battery position. The two lights are installed such that the light beam from each light can be seen by the pilot of the aircraft being launched. The green military power light is continuously on during military power and the combat power light (amber) is continuously on during combat power. When the catapult's final ready is reached, the military and combat power lights both flash.

3. The squadron Plane Checkers shall position themselves so they may observe the lighting of the afterburners and normal nozzle action. They shall withhold giving the thumbs-up (day) or steady blue stubby wand (night) signal until all conditions are normal. Should an afterburner fail to ignite, the Plane Checker shall give the SUSPEND signal.

4. With the aircraft at take-off power, the pilot shall make his final checks. If everything is satisfactory, he shall position his head against the seat headrest and shall indicate he is ready by turning his head slightly toward the Catapult Safety Observer and by executing a right- or left-hand salute.

   a. If, for any reason, the pilot desires to abort the launch, he shall so indicate by transmitting “SUSPEND, SUSPEND CATAPULT NO.____," and by shaking his head negatively (day) and not turning on the navigation lights (night), in which case the Catapult Officer shall SUSPEND.

WARNING

- Once the aircraft is tensioned on the catapult and turned up to take-off power, the pilot shall not adjust his visor nor make any other movement that might be mistaken for a salute until he is ready to be launched.
- The Air Officer shall not rely on changing rotating beacons from GREEN to RED to suspend the launch, but shall activate the SUSPEND pushbutton.
- If there is any doubt in the mind of the Catapult Safety Observer, TSPO, Director, Plane Checker, or any topside crewman as to satisfactory hookup, aircraft configuration, or proper catapult condition, he shall give the SUSPEND signal — crossed arms overhead (day) or horizontal wand movement (night). Below deck personnel shall depress their SUSPEND buttons and/or state “SUSPEND" over the voice communication system.

5. The Catapult Safety Observer, after observing the pilot's salute (day) or navigation lights (night), shall return the salute (day) and shall:

   a. Immediately assume a crouched position, and ensure all personnel in the immediate catapult area are in a crouched position.

   b. Ensure the aircraft is properly configured for flight, paying particular attention to flap/slat setting, open panels, safety pins, wing locks, and stabilizer position.

   c. Check for a green rotating beacon.

   d. Check for a clear deck forward.

   e. Ensure the catapult deckedge red suspend light is not illuminated.

   f. Ensure the aircraft sounds normal at take-off power.

   g. Check squadron Plane Checkers for thumbs up (day) or steady blue stubby wand (night) held vertically.

   h. Check TSPO for a thumbs up (day) or steady white stubby wand (night) held vertically.

   i. Ensure Bow/Angle Safety Observers are displaying green light/thumbs up (day) or green light/wand (night).

   j. Check for airborne aircraft traffic (wave-off, bolter, etc.) to preclude the possibility of collision between the airborne and the launching aircraft.

6. If all conditions are satisfactory, the Catapult Safety Observer shall go down on one knee and give a thumbs up (day) or vertical green wand (night) to the Catapult Officer.

7. The Catapult Officer, upon observing the pilot's salute (day) or navigation lights illuminated (night) and the Catapult Safety Observer in a crouched position, shall depress the final ready pushbutton and begin a final scan.

WARNING

(ICCS; all modes of operation.) If at any time after launch bar is in the spreader there is a need to make a CSV setting change, the catapult shall be suspended and launch bar raised. The verification process shall be completed again. Any time there is a disagreement between any stations on the correct CSV setting, the catapult shall be suspended until resolution of the disagreement.

8. The CCP Operator, after observing the final ready light illuminated, shall conduct a final scan of the CCP, paying particular attention to ensure the launch valve clock timers have reset to zero. If there is an indication of any malfunction, the CCP Operator shall immediately suspend the catapult.
9. The Monitor, after observing the final ready light illuminated, shall conduct a final scan of his control console, checking for malfunction lights or red status lights, and shall announce to the Catapult Officer the steam pressure and “CLEAR FORWARD." If there is any indication of a malfunction, the catapult shall immediately be suspended.
10. If all conditions are “go," the Catapult Officer shall complete his final scan and shall include the following:
    a. Check for a clear deck forward.
    b. Monitor's console for malfunction indications.
    c. Green rotating beacon/green “GO" light on Catapult Officer's console.
    d. Green steam pressure “GO" light on Catapult Officer's console.
    e. Wind and crosswind components.
    f. Verify green CSV match light.
    g. Observe Catapult Safety Observer, TSPO, and squadron Plane Checkers giving thumbs up or appropriate night signal.
    h. Observe aircraft properly configured for flight.
    i. Observe pilot is properly positioned for launch.
    j. Check deck pitch.
11. If all conditions are satisfactory, the Catapult Officer shall depress the fire pushbutton.

5.4.4 Launch Complete

WARNING

During normal operations, never press the LAUNCH COMPLETE pushbutton following a SUSPEND. Except for no-load launches and in cases where it is known positively that a launch is complete, the LAUNCH COMPLETE pushbutton shall be pressed only with the permission of the Catapult Officer.

1. After ensuring the launch is complete, the CCP shall take such actions as necessary to initiate the next launch.
2. The Monitor Operator shall retract the shuttle after ensuring the track is clear.
3. Subsequent aircraft shall be spotted and tensioned as rapidly and safely as possible.

5.5 NIGHT/CASE III OPERATIONS

1. Night/Case III procedures are essentially the same as those for normal day operations with one exception; a minimum departure (launch) interval of 30 seconds shall be utilized between aircraft.
2. The Catapult Officers shall have sufficient view of the other set of catapults so that they may control the launch interval or the Air Officer may maintain complete control. In any case, the Air Officer shall monitor the launch to ensure that the bow and waist catapults do not launch simultaneously, and provide coordinating assistance should any unusual circumstances, such as aircraft or catapult becoming inoperative, arise.
3. The types of wands to be used during launching operations are as follows:

Catapult Officer/ Catapult Safety Observer	1 red and 1 green standard
Topside Petty Officer	1 white stubby
Director	2 amber standard
Plane Checker	1 blue stubby
Centerdeck Operator	1 white stubby
Deckedge Operator	1 red standard
Ordnance Safety	2 red standard (banded)
JBD Safety	1 white stubby
Bow/Angle Safety Observer	1 red and 1 green standard
Weight Board	1 white stubby

Note

The Centerdeck Operator shall maintain an extra set of Catapult Officer's wands. Standard denotes full length cones and stubby denotes a modified cone providing 3 inches of cone. Any suitable battery and switch housing are authorized if the cone is brightly lighted. Banded denotes two 3/4-inch bands spaced equidistant from the cone.

5.6 DECK LAUNCHING

1. If a deck launch is preceded by a catapult launch, it is the responsibility of the Catapult Launching Officer to ensure that all personnel and equipment are clear, and that no loose gear is adrift on the deck area to be used (axial/angle). The Catapult Launching Officer shall then give the Deck Launching Officer the “CLEAR DECK" signal.
   a. The Air Officer shall announce on the 5MC “STAND CLEAR OF THE ANGLE/BOW WHILE DECK LAUNCHING AIRCRAFT."
   b. The Air Officer shall not turn the rotating beacon from red to green until the warning is given.
2. When a deck launch is not preceded by a catapult launch, it is the responsibility of the Deck Launching Officer to ensure all the aforementioned are accomplished prior to launch.
3. Before clearing the Launching Officer to commence launching aircraft, the Air Officer shall verify the previously determined deck run required.
   a. The Director, when positioning the aircraft for launch, shall ensure that the nose wheel is aligned, wings are spread and locked, and flaps are set as required before passing control to the Launching Officer. The aircraft shall be aligned as accurately as possible with the launch lineup line (landing area centerline when launching down the angle deck).
   b. The Director shall then taxi the aircraft into position, and the squadron's aircraft inspector shall check the aircraft for loose or missing panels/doors, leaks, and other visible discrepancies. If he is satisfied

and the aircraft is ready for launch, he shall so signify by giving the Launching Officer the “THUMBS UP" signal.

4. The Launching Officer shall:
   a. Ensure the area behind the aircraft is clear of personnel, equipment, and loose gear.
   b. Check for a green rotating beacon and a clear deck forward before signaling for the pilot to add power for takeoff.
5. When signaled to do so, the pilot shall smoothly but expeditiously add power and complete final cockpit checks. He shall, in the case of a single-piloted aircraft, indicate his readiness for launch by an exaggerated nod of the head in the daytime or by turning navigation lights on steady at night. In dual-piloted aircraft, readiness to launch shall be signaled by a salute from the pilot, relayed by the copilot if the Launching Officer is on the starboard side of the aircraft.
6. As power is being applied for launch, the Launching Officer shall check the aircraft's configuration and inspect it for leaks or other visible discrepancies. After receiving a “THUMBS UP" from the aircraft inspector and a salute from the pilot(s), the Launching Officer shall again check for a clear deck forward. He shall ensure that the deck and catwalks are clear of personnel before giving the pilot the signal to launch.
7. After receiving the launch signal, the pilot shall release his brakes and execute a takeoff in accordance with the applicable aircraft NATOPS flight manual.

5.7 CARRIER QUALIFICATIONS

During CARQUAL operations, the pilot shall transmit aircraft side number, fuel weight, and gross weight during a two-way radio check. The same transmission is required not only for the initial launch but also after hot refueling and after a pilot switch. The Air Officer shall ensure that the aircraft side number and gross weight are passed to the Catapult Officer.

WARNING

- The Launching Officer shall closely scan recovering aircraft to avoid simultaneously launching and recovering aircraft.
- During CARQUAL operations, a close monitoring of aircraft gross weights is mandatory by the Air Officer, the Catapult Officer, pilots, and squadron representatives.

5.8 POST-LAUNCH PROCEDURES

5.8.1 Catapult Crew Debrief

While not always necessary or required after every launch, post-launch debriefs by the Catapult Officer should be held with the catapult crews periodically, and shall be held whenever a situation during a launch needs clarification. These debriefs may pertain to the topside crew, the below deck crew, or the entire catapult crew.

The best possible results may be realized when there is a continuing flow of information and ideas among the Catapult Officer, supervisory personnel, and the catapult crew. Debriefs that correct errors and compliment the crew on outstanding performance can do wonders for crew morale and enhance the smoothness and efficiency of subsequent launches.

5.9 EMERGENCY ACTIONS AND PROCEDURES

Safety is paramount when conducting emergency procedures. Proper procedures coupled with common sense will enable catapult crews to handle any emergency. This manual does not discuss all emergencies, nor are they in-depth. The reader should refer to appropriate NAVAIR Operation Manuals for a thorough discussion of emergency

procedures. Drill scenarios and periodicity requirements are outlined in Appendix II of COMNAVAIRFORINST 3500.20 series.

5.9.1 Aborting the Launch

1. At any time, up to and including FINAL READY, firing of the catapult can be prevented and the launch aborted. The Deckedge Operator, Console/CCP Operator, Monitor, PriFly, Water Brake Operator, and Catapult Officer (ICCS) all have SUSPEND switches, which when activated, break the interlock complete circuit and prevent the launch.
2. Any person, other than those having access to a SUSPEND switch, who detects a cause for aborting the launch shall signal the Catapult Officer/Catapult Safety Observer and/or the Deckedge Operator/Monitor by crossing his arms high overhead (day) or waving a wand back and forth horizontally (night) to indicate a SUSPEND situation exists.
3. The Deckedge/Monitor Operator does not have to receive the SUSPEND signal from the Catapult Officer/Catapult Safety Observer in order to actuate his SUSPEND switch. He shall do so immediately upon observing a SUSPEND signal from anyone on deck, or if he detects any condition that would be reason to abort the launch.
4. The pilot can abort the launch at any time prior to being tensioned by refusing to taxi onto the catapult, and/or using hand signals to indicate his desire not to go. At night, he shall notify PriFly who shall relay his problems to the Catapult Officer/Director.
5. Once the aircraft is tensioned, the pilot shall indicate his desire to abort by shaking his head negatively (day) and by not turning on his lights (night), and by transmitting the words “SUSPEND, SUSPEND, CATAPULT NO._____." The Catapult Officer, after taking control of the aircraft and upon observing the aircraft turning up to full power, shall wait a reasonable length of time and then initiate a SUSPEND if PriFly has not already done so.
6. Any time a SUSPEND is initiated, it shall be carried out to completion. This includes untensioning of the aircraft, reduction of aircraft power back to idle, and moving the shuttle forward of the launch bar; it does not necessarily include removal of the aircraft from the catapult.

WARNING

In the event of a SUSPEND, the Catapult Officer/Catapult Safety Observer shall not signal the pilot to throttle back until he has positively determined that the catapult is safe/suspended and the shuttle is forward of the launch bar. If the launch bar cannot be raised without sending personnel under the aircraft, the Catapult Officer shall ensure the catapult is safe/suspended, then give pilot the THROTTLE BACK signal. With direct control of the aircraft, the Catapult Officer shall then send personnel to lift the launch bar and signal SHUTTLE FORWARD with caution.

5.9.2 SUSPEND (Conventional/Deckedge Mode)

5.9.2.1 Signals and Procedures

1. Any time prior to the FIRE pushbutton being depressed, the catapult may be stopped and the launch aborted, by initiating a catapult SUSPEND. The Catapult Officer, upon observing a SUSPEND condition or being notified of a catapult SUSPEND situation, shall give the SUSPEND signal.

Any flight deck crewman who detects any reason for aborting the launch may suspend the catapult launch by immediately giving the SUSPEND signal.

2. Any time a SUSPEND is initiated, it shall be carried out to completion. This includes untensioning of the aircraft, moving the shuttle forward of the launch bar, and reducing the aircraft power to idle.

3. The Deckedge Operator, upon observing any SUSPEND signal, shall immediately actuate the SUSPEND switch followed by giving the SUSPEND signal.

WARNING

When the SUSPEND signal is given, the pilot shall remain ready to be launched, and he shall not retard his throttle until so directed by the Catapult Officer. At no time after full power turn-up shall the signal to retard throttle be given to the pilot until the catapult is SAFE.

Note

In the event another station suspends the catapult, the Deckedge Operator shall give the SUSPEND signal to notify the Catapult Officer of the SUSPEND condition.

4. The Catapult Officer, after noting the return of his SUSPEND signal, shall signal the Deckedge Operator to UNTENSION (SHUTTLE AFT) the aircraft.
5. The Deckedge Operator shall immediately depress shuttle/maneuver aft causing tension to be relaxed and the shuttle to move aft.
6. If the Water Brake Operator initiated the SUSPEND, the Console/CCP Operator shall actuate his suspend switch and then direct the Water Brake Operator to remove his SUSPEND prior to the Deckedge/Monitor Operator depressing the maneuver aft pushbutton.
   a. In case of electrical failure, the Deckedge Operator shall direct the Retraction Engine Operator to depress the manual override on the maneuvering valve.
7. As the shuttle moves aft, the launch bar normally will raise automatically as it disengages the throat of the shuttle. With the launch bar in the raised position, the Catapult Officer shall give the SHUTTLE FORWARD signal to the Deckedge Operator.
8. Once the shuttle is forward of the launch bar, the Catapult Officer shall give the THROTTLE BACK signal to the pilot.

WARNING

- Catapult crewmen shall not approach the aircraft until the shuttle is forward of the launch bar, and the pilot has retarded his throttle to idle, except when an emergency condition exists.
- In the event of a SUSPEND, the Catapult Officer shall not signal the pilot to throttle back until he has positively determined that the catapult is suspended and the shuttle is forward of the launch bar. If the launch bar cannot be raised without sending personnel under the aircraft, the Catapult Officer shall ensure the catapult is suspended and then give the THROTTLE BACK signal. With direct control of the aircraft, the Catapult Officer shall then send personnel to lift the launch bar and signal SHUTTLE FORWARD with caution.

Note

If failure of the bridle tensioner prevents normal movement of the shuttle past the raised launch bar, the Catapult Officer shall throttle back the aircraft, and instruct applicable watch stations to position their SUSPEND switches off, and instruct the Deckedge Operator to MANEUVER FORWARD. After the shuttle is maneuvered forward, the SUSPEND switches shall be reactivated, if applicable.

9. When the catapult is safe, the cause of the SUSPEND shall be determined prior to resuming catapult operations.
10. With the aircraft at idle power, control shall be passed to the Director to either resume the launch, or to remove the aircraft from the catapult.

5.9.2.2 Procedures Under Emergency Conditions

Note

Emergency conditions are construed to apply to aircraft that do not have the capability to, or are unable to, raise the launch bar automatically.

1. If the shuttle is moved aft and the launch bar does not automatically raise, the Catapult Officer, after ensuring the catapult is properly suspended, shall signal the pilot to THROTTLE BACK.
   a. When the aircraft is at idle power, the launch bar shall be raised manually by the TSPO and held until the shuttle is moved forward of the launch bar.

WARNING

The TSPO, holding the launch bar in the raised position, shall keep hands clear of the shuttle as it is maneuvered forward. In the event the launch bar begins to slip, any attempt by the TSPO to recover the launch bar may result in serious injury. Ensure both hands are clear of the shuttle and visible to the Catapult Officer and Deck Edge Operator prior to reattempting to raise the launch bar.

2. For nose tow aircraft, if the grab latch fails or any malfunction preventing the shuttle to SHUTTLE/MANEUVER AFT, the Catapult Officer, after ensuring the catapult is safe/suspended, may:
   a. Throttle back the aircraft.
   b. Off brakes.
   c. Buffer aft for 4 to 10 inches.
   d. Taxi aircraft forward.
   e. Raise launch bar.
   f. Shuttle forward.

CAUTION

Do not allow the NGL unit to buffer too far aft causing buffer hook retraction with the trail bar still attached.

5.9.2.3 Removing Aircraft from Catapults

1. Prior to buffering aft, ensure the aircraft is de-armed and the JBD is lowered.

CAUTION

Reverse taxi of an E2/C2 to relieve tension on the trail bar may result in damage to the catapult and/or aircraft.

   a. Aircraft with Forward Firing Ordnance on Catapults. Signals and Procedures. After completion of suspend and prior to buffering aft or lowering JBD:

      (1) Upon SHUTTLE FORWARD, the Aircraft Director/Catapult Officer shall turn over the aircraft to the Ordnance Safety Petty Officer for de-arming.

      (2) The Ordnance Safety Petty Officer shall ensure JBDs are in the raised position, launch bar is up, flaps are in the takeoff position, and all personnel are clear of the missile path.

      (3) De-arming signals shall be in accordance with the Aircraft Signals NATOPS Manual (NAVAIR 00-80T-113).

      (4) After completion of De-arm, control is passed to the Director.

2. Once the shuttle is forward, the control is passed to the Director.

3. In order to remove the aircraft from the buffer unit when buffering aft, the Director, upon a signal from the Catapult Officer, shall signal OFF BRAKES.

   a. The Catapult Officer shall then signal the Deckedge Operator to BUFFER AFT by holding both arms at waist level and pointing forefingers (day), wands (night), in the aft direction.

4. After the aircraft moves approximately 4 to 10 inches, the Catapult Officer signals the pilot via the Director to HOLD BRAKES.

5. The Catapult Officer shall then give the BUFFER FWD signal by holding both arms at waist level and pointing forefingers (day), wands (night) in the forward direction to the Deckedge Operator who presses the BUFFER FWD pushbutton to allow slack in the holdback bar/release element.

   a. The catapult crew then may disconnect the holdback bar/release element.

   b. After the holdback bar/release element is removed, the Catapult Officer signals the Deckedge Operator to BUFFER AFT to lower the buffer hooks.

   c. When the catapult crew is clear, the Catapult Officer passes control back to the Director, and then the aircraft may be taxied/towed forward and clear of the catapult.

6. The hand signal sequence required to complete removing an aircraft is as presented in Figure 5-3.

5.9.3 SUSPEND (ICCS)

5.9.3.1 Signals and Procedures

1. Any time prior to the FIRE pushbutton being depressed, the launch may be aborted by initiating a catapult SUSPEND. The Catapult Officer, upon observing a SUSPEND condition or being notified of a catapult SUSPEND situation, shall initiate the SUSPEND procedure by immediately depressing the catapult SUSPEND pushbutton. Any flight deck crewman who detects any reason for aborting the launch may suspend the catapult launch by immediately giving the SUSPEND signal.

2. Any time a SUSPEND is initiated, it shall be carried out to completion. This includes untensioning of the aircraft, reduction of aircraft power to idle, and moving the shuttle forward of the launch bar.

3. The Catapult Safety Observer shall, upon observing a SUSPEND signal, or the flashing red deckedge SUSPEND light, give the SUSPEND signal immediately followed by the SHUTTLE AFT/UNTENSION signal.
4. Upon observing the SHUTTLE AFT/UNTENSION signal, the Catapult Officer shall depress the MANEUVER AFT pushbutton.
5. If the Water Brake Operator initiated the SUSPEND, the Catapult Officer shall actuate his suspend switch and then direct the Water Brake Operator to remove his SUSPEND prior to depressing the MANEUVER AFT pushbutton.
   a. In case of electrical failure, the Catapult Officer shall direct the CCP/Retraction Engine Operator to depress the manual override on the maneuvering valve.
6. For nose tow aircraft, the Catapult Safety Observer, after observing the shuttle move aft, shall give the RAISE LAUNCH BAR signal to the pilots of all aircraft capable of raising launch bars.
7. When the aircraft launch bar is clear of the shuttle, the Catapult Safety Observer shall give the SHUTTLE FORWARD signal to the Catapult Officer.

WARNING

- Under normal conditions, the catapult crew shall not approach the aircraft until the launch bar is free and the pilot has returned to idle power.
- If the launch bar fails to disengage from the shuttle, the Catapult Safety Observer shall positively determine that the catapult is in a safe condition before giving the THROTTLE BACK signal.

8. Once the shuttle is forward of the launch bar the Catapult Safety Observer shall give the THROTTLE BACK signal to the pilot.

WARNING

In the event of a SUSPEND, the Catapult Safety Observer shall not signal the pilot to THROTTLE BACK until he has positively determined that the catapult is suspended and the shuttle is forward of the launch bar. If the launch bar cannot be raised without sending personnel under the aircraft, the Catapult Safety Observer shall ensure the catapult is suspended, then give the THROTTLE BACK signal. With direct control of the aircraft, the Catapult Safety Observer shall then send the TSPO to lift the launch bar and signal SHUTTLE FORWARD with caution.

Note

If failure of the bridle tensioner prevents normal movement of the shuttle past the raised launch bar, the Catapult Officer shall direct the Catapult Safety Observer to THROTTLE BACK the aircraft, and instruct applicable watch stations to position their SUSPEND switches off, and press MANEUVER FORWARD. After the shuttle is maneuvered forward, the SUSPEND switches shall be reactivated.

9. When the catapult is safe, the cause of the SUSPEND shall be determined prior to resuming catapult operation.
10. With the aircraft at idle power, control shall be passed to the Director to either resume the launch, or to remove the aircraft from the catapult.

Figure 5-3. Hand Signal Sequence for Aircraft Removal

NOSETOW (T-45, F/A-18)	NOSETOW (EA-6B, E-2, C-2)
Suspend Shuttle Aft/Untension Raise Launch Bar[2] Shuttle Forward Throttle Back Off Brakes Buffer Aft Hold Brakes Buffer Forward Buffer Aft Pass Control[1]	Suspend Shuttle Aft/Untension Throttle Back Raise Launch Bar **WARNING** When raising launch bar by hand, exercise extreme care to avoid hand injuries. Shuttle Forward Off Brakes Buffer Aft[3] Hold Brakes Buffer Forward Buffer Aft Pass Control[1]

NOTES:
1. The Director shall taxi the aircraft clear of the NGL guide track after the holdback bar/release element has been removed.
2. If the launch bar does not raise automatically, the catapult shall be properly suspended and the throttle retarded so the TSPO can raise and hold the launch bar up until the shuttle is maneuvered forward of the launch bar. The launch bar shall be lowered for the buffer sequence.
3. Buffering aft of E-2/C-2/EA-6B aircraft with the launch bar in the locked-up position will damage the aircraft nose gear assembly.

5.9.3.2 Procedures Under Emergency Conditions

Note

Emergency conditions are construed to apply to aircraft that do not have the capability to, or are unable to, raise the launch bar automatically.

1. If the shuttle is moved aft and the launch bar does not automatically raise, the Catapult Safety Observer, after ensuring the catapult is properly suspended, shall signal the pilot to THROTTLE BACK. When the aircraft is at idle power, the launch bar shall be raised manually by the TSPO and held until the shuttle is moved forward of the launch bar.

WARNING

The TSPO, holding the launch bar in the raised position, shall keep hands clear of the shuttle as it is maneuvered forward. In the event the launch bar begins to slip, any attempt by the TSPO to recover the launch bar may result in serious injury. Ensure both hands are clear of the shuttle and visible to the Catapult Officer or Catapult Safety Observer and Deck Edge Operator prior to reattempting to raise the launch bar.

2. For nose tow aircraft, if the grab latch fails or any malfunction prevents the shuttle from MANEUVERING AFT, the Catapult Officer and Catapult Safety Observer, after ensuring the catapult is safe/suspended, may:
   a. Throttle back the aircraft.
   b. OFF brakes.

c. Buffer aft for 4 to 10 inches.

d. Taxi aircraft forward.

e. Raise launch bar.

f. Shuttle forward.

CAUTION

Do not allow the NGL unit to buffer too far aft causing buffer hook retraction with the holdback bar still attached.

5.9.3.3 Removing Aircraft from Catapults

1. Prior to buffering aft, ensure the aircraft is de-armed and the JBD is lowered.

CAUTION

Pilots of E-2/C-2 aircraft shall be briefed not to attempt to move aft by reversing engine thrust, as damage to the holdback bar or aircraft may result. Backing is permitted by reversing engine thrust only after removal of the trail bar. If BUFFER AFT is inoperative, using extreme caution, the aircraft may be taxied in reverse only as far as required to relieve tension on holdback bar.

   a. Aircraft with Forward Firing Ordnance on Catapults. Signals and Procedures. After completion of suspend and prior to buffering aft or lowering JBD:

      (1) Upon SHUTTLE FORWARD, the Aircraft Director/Catapult Officer shall turn over the aircraft to the Ordnance Safety Petty Officer for de-arming.

      (2) The Ordnance Safety Petty Officer shall ensure JBDs are in the raised position, launch bar is up, flaps are in the takeoff position, and all personnel are clear of the missile path.

      (3) De-arming signals shall be in accordance with the Aircraft Signals NATOPS Manual (NAVAIR 00-80T-113).

      (4) After completion of De-arm, control is passed to the Director.

2. Once the shuttle is forward, the control is passed to the Director.

3. In order to remove the aircraft from the buffer unit when buffering aft, the Director, upon signal from the Catapult Safety Observer, shall signal OFF BRAKES.

   a. The Catapult Safety Observer shall then signal the Monitor to BUFFER AFT by holding both arms at waist level and pointing forefingers (day), wands (night), in the aft direction.

4. After the aircraft moves approximately 4 to 10 inches, the Catapult Safety Observer signals the pilot via the Director to HOLD BRAKES.

5. The Catapult Safety Observer shall then give the BUFFER FWD signal by holding both arms at waist level and pointing forefingers (day), wands (night), in the forward direction to the Monitor who presses the BUFFER FWD pushbutton to allow slack in the holdback bar/release element. The catapult crew may then disconnect the holdback bar. After the holdback bar is removed, the Catapult Safety Observer signals the Monitor to BUFFER AFT to lower the buffer hooks. When the catapult crew is clear, the aircraft may then be taxied forward and clear of the catapult.

6. The sequence required to remove an aircraft is as presented in Figure 5-3.

5.10 FCF LAUNCH PROCEDURES

For FCF Launch procedures refer to NAVAIR 00-80T-120 (CVN Flight/Hangar Deck NATOPS).

5.11 DOWNED AND STANDBY AIRCRAFT

5.11.1 Downed Aircraft

Downed aircraft (duds) shall be disposed of in accordance with the prelaunch briefing. Except in case of emergency, they shall be shut down only on signal from a director. Pilots shall remain in duds until the plane captain is on hand and ready to man the cockpit.

5.11.2 Standby Aircraft

All standby aircraft (spares) shall be manned by a full flightcrew unless specific provision to the contrary is included in the air plan. Spares, if not launched, will normally be kept turning up until it becomes apparent that they are no longer needed or until other operational considerations require that they be shut down. In any event, pilots shall not secure engines until directed to do so. When a spare is launched to replace a downed aircraft, PriFly will relay to the pilot the side number of the aircraft he is replacing. Standby helicopters will often be launched to clear the deck for fixed-wing operations. When this occurs, the pilot will proceed directly to the Delta pattern and await landing instructions unless directed otherwise.

5.12 RESPOT FORWARD

The pace of the respot forward depends upon how soon the ensuing recovery is expected to begin. If there is no recovery scheduled to follow the launch, it may not be necessary to move the aircraft at all; however, all preparations must be made for an immediate respot forward in case of emergency. The aircraft handling officer is responsible for requesting taxi pilots as required. Prelaunch briefing should cover the respot forward in detail so that it can be performed expeditiously, safely, and with a minimum of confusion in the event of an emergency.

5.13 EMERGENCY AFTER LAUNCH

5.13.1 Visual Meteorological Conditions

If an emergency requires an immediate landing, the pilot shall prepare to jettison external stores and dump fuel as necessary to lower the aircraft gross weight below the maximum allowable landing weight. He shall advise the tower of the nature of the emergency and his desires. The air officer will inform the bridge of the situation, direct the preparation of the deck, and give the pilot an expected BRC and an estimated Charlie time. The expected Charlie time will be based on the time required to clear the deck and get an acceptable WOD for the recovery. The pilot must observe the progress of the turn into the wind and the preparation of the deck. He must attempt to time his approach to avoid arriving at the ramp too early.

5.13.2 Night/Instrument Meteorological Conditions

Should an aircraft have an emergency during departure and require an immediate landing, the departure controller will provide vectors until the aircraft is picked up by an approach or a final controller. Every effort shall be made to retain the aircraft on the departure frequency until safely aboard. PriFly and the LSO must be advised immediately of the emergency and the control frequency.

Aircraft with emergencies which do not require immediate recovery will continue normal departure procedures while the departure controller expeditiously acquires positive control. Once acquired, positive control shall be employed until the emergency aircraft has been recovered or diverted.

5.14 ALERT AIRCRAFT REQUIREMENTS

Alert aircraft are designated by the maximum allowed response time in minutes from when the decision to launch is made until the aircraft is airborne. Four standard aircraft alert designations are used (i.e., Alert 5, Alert 15, Alert 30 and Alert 60). An Alert 15 requirement means that the Alert 15 aircraft must be started and launched

within 15 minutes of a decision to launch it. Each alert category requires that a designated aircraft, aircrew, launch support personnel, and launch equipment and accessories be established and maintained in a corresponding readiness condition for the duration of the alert. Readiness conditions for alert aircraft are listed in Figure 5-4.

Figure 5-4. Alert Aircraft Readiness Conditions

Alert Response Requirement	Readiness Condition Required
Alert 5	Condition I
Alert 15	Condition II (See Note)
Alert 30	Condition III
Alert 60	Condition IV
Note Alert SAR helicopter in Condition II may be folded provided the primary SAR helicopter is airborne. See Paragraph 8.3.6.2.	

Flightcrews for condition aircraft shall be called away early enough to permit a normal preflight inspection, start, warmup, and completion of takeoff checks by the alert time specified in the air plan for the condition of readiness to become effective. After the pilot declares the aircraft ready for flight, it shall be placed in the appropriate aircraft condition of readiness as described in the following paragraphs.

5.14.1 Fixed Wing Condition Aircraft

5.14.1.1 Fixed Wing Aircraft Readiness Conditions

Readiness condition requirements for fixed wing aircraft are as follows:

5.14.1.1.1 Condition I

The aircraft shall be spotted on the catapult or in a position affording a clear route to the catapult. Unless otherwise directed by the ACHO, the aircraft shall be secured with initial four or six point tiedowns. Aircraft should have access to electrical power and a SINS cable with a stored heading alignment completed for applicable aircraft. All necessary starting equipment shall be plugged in and a director, starting crewman, plane captain, arm/dearm crew, and required plane handlers shall stand by the aircraft. The aircraft's crew shall be ready for flight in all aspects, with all equipment attached and adjusted as in flight. The catapult crew shall be on station and alert. No maintenance action allowed.

5.14.1.1.2 Condition II

All provisions for Condition I apply, except that aircrew shall be in flight gear, briefed, and standing by in the ready room. No maintenance action allowed.

5.14.1.1.3 Condition III

Aircrew shall be briefed and in the flight suits maintaining contact with their ready room. Starting equipment shall be immediately available, and the flight deck and catapult crews shall be standing by their stations. No maintenance action allowed.

5.14.1.1.4 Condition IV

Aircrew shall be briefed and in contact with their ready rooms. Starting equipment shall be immediately available, and the flight deck and catapult crews shall be standing by their stations. Maintenance may be performed on the aircraft if no delay in launch is involved.

5.14.1.2 Launch of Condition Fixed Wing Aircraft

When ordered by competent authority, the air officer will pass the order over the flight deck announcing system to launch the Condition I aircraft. Aircraft, flight deck, arm/dearm, and catapult crews shall, without awaiting further instructions, go through the normal start and prelaunch procedures. The LSO shall man the platform and the recovery equipment controller shall have all recovery equipment manned. As preparations are made for the launch, the air officer will relay wind information to the launching officer and an initial vector, if available, to the pilot. He shall obtain permission from the bridge to launch and, when all conditions are satisfactory, shall turn on the green rotating beacon, clearing the catapult officer to launch.

5.15 CONTROL OF DEPARTING AIRCRAFT

Primary responsibility for adherence to the assigned departure rests with the pilot; however, advisory control shall normally be exercised, with a shift to positive control as required by weather conditions, upon request, or when the assigned departure is not being adhered to. After launch, CATCC shall:

1. Record data as required on status boards.
2. Ensure communications and positive track are established with all aircraft to the extent possible under existing EMCON conditions.
3. Request NAVAID checks as necessary.
4. Maintain advisory control of departing point-to-point flights until pilots shift to en route frequencies and of other aircraft until control is accepted by CDC or another controlling agency.
5. Before releasing aircraft to another controlling agency, give each pilot (or flight leader) any pertinent information, such as changes in composition of flight, changes in PIM, or changes in mission.
6. When transferring control to CDC, give CDC the range and bearing of the aircraft being transferred, and ensure CDC acknowledges assumption of control.
7. File flight plans as necessary.

5.15.1 Departure Radials

Departure radials are based on the use of TACAN/JPALS for providing lateral separation. The minimum standard separation of departure radials under instrument conditions is 20 degrees.

WARNING

Use of ships TACAN during non-radar control is necessary to maintain required separation standards.

Assignment of departure radials is normally dependent on the following:

1. Mission of the aircraft.
2. Number of carriers in the formation.
3. Topographical features in the area.
4. Those radials reserved for emergencies, letdowns, or helicopter holding.

Direct routing will be utilized as much as possible in order to lessen delay time in the execution of departures.

5.15.2 Departure Communication Procedures

5.15.2.1 Launch Frequencies

All aircraft should monitor land/launch (tower) if case I and departure control if case II/III. If launching directly into the landing pattern, monitor the appropriate recovery frequency. Condition and CAP launches will be on a frequency designated by CDC and monitored by the tower.

5.15.2.2 Single-Frequency Departures

These departures are highly desirable and shall be utilized whenever possible. Where single-frequency departures are not possible, single-piloted aircraft shall not be required to change radio frequencies or IFF/SIF codes after launch until at least 2,500 feet of altitude has been reached and the aircraft is in a climbing, wings-level attitude. Single-piloted aircraft that are assigned operating altitudes below 2,500 feet shall not change frequencies or IFF/SIF codes until a level attitude and cruise configuration have been attained. Guard channel shall be monitored at all times.

5.15.2.3 Case III Departure Voice Reports

These reports will vary with weather, state of training, EMCON condition, and the type of operation. The following reports are commonly used:

1. Airborne.
2. Passing 2,500 feet.
3. Arcing.
4. Established outbound (on assigned radial).
5. Popeye, with altitude (see Note).
6. On top, with altitude.
7. Kilo.

Note

When in IMC, Popeye will be a mandatory report for departing aircraft passing FL 180 (or assigned departure altitude if lower) if not on top.

5.15.2.4 Lost Communications During Departures

If communications are lost during departure, squawk Modes I and III as listed in Figure 4-2. If in VMC when communications are lost, remain VMC. If able, return to the ship by visual means for recovery. If on top/IMC, proceed to the applicable emergency marshal and commence a descent to depart that fix at EEAT.

5.15.2.4.1 Good Bearing but No Range Information from the Ship

In the event of lost communications and a loss of range information, the following departure procedure shall be followed utilizing TACAN bearing information. Continue with the prebriefed departure; utilize DR procedures to maintain the appropriate arc until reaching assigned departure radial. Proceed to approximately 50 miles, reverse course, proceed inbound on the assigned departure radial at the emergency marshal assigned altitude, and enter overhead holding using the prebriefed expected final bearing for proper holding orientation. Conserve fuel and be alert for joinup. If not joined by an escort aircraft, commence approach at EEAT. Use prebriefed expected final bearing to determine outbound and inbound tracks.

5.15.2.4.2 TACAN/JPALS Good Range and Bearing

All aircraft will continue with prebriefed departure, climbing outbound on departure radial unless modified by CATCC or until reaching 50 nm and commence left-hand holding between 40 and 50 nm. After holding for 30 minutes, proceed inbound on the departure radial, climbing or descending to the emergency marshal assigned

altitude. When reaching the distance prescribed for emergency marshal, arc in the shortest direction until reaching the assigned emergency marshal fix, enter holding, and commence approach at assigned EEAT.

5.15.3 Fixed-Wing Departures/Rendezvous

5.15.3.1 Case I Departure

This departure may be utilized when it is anticipated that flights will not encounter instrument conditions during departures and rendezvous with weather conditions no lower than 3,000 feet and 5 nm visibility.

5.15.3.1.1 Jet/Turboprop Aircraft

A clearing turn is executed to create upwind separation between departing aircraft and aircraft remaining in the landing pattern. It also serves as a visual signal of the aircraft's intent to depart the carrier. A clearing turn shall be executed during all case I and II launches when the aircraft is departing the carrier. Clearing turns shall be made to the right off the bow and to the left off the waist catapults for twenty degrees of heading change followed by a reversal of turn to parallel the BRC. Clearing turns shall not be executed by aircraft during case III launches or when the aircraft intends to remain in the landing pattern.

WARNING

Performing a clearing turn using excessive roll rates and/or angles of bank prior to ensuring that the aircraft has achieved safe flying speed and establishing a positive rate of climb may result in loss of directional control or departure from controlled flight.

After a clearing turn, proceed straight ahead paralleling the BRC at 500 feet until 7 nm. Aircraft are then cleared to climb unrestricted in visual conditions.

5.15.3.2 Case I Rendezvous

Rendezvous shall conform to air wing doctrine.

5.15.3.3 Case II Departure

For departure, visual conditions at the ship may exist down to a ceiling of 1,000 feet and visibility of 5 miles. Launch shall be on departure control frequency.

5.15.3.3.1 Jet Aircraft

After a clearing turn, proceed straight ahead at 500 feet paralleling the BRC. At 7 nm, turn to intercept the 10 nm arc, maintaining visual conditions until established on the departure radial. The 500-foot restriction is lifted after 7 nm if the climb can be continued in visual conditions. Jets shall maintain 300 knots until VMC on top.

5.15.3.3.2 Turboprop Aircraft

After a clearing turn, parallel the BRC at 500 feet. At 6 nm, turn to intercept the 7 nm arc, maintaining visual conditions until established outbound on the departure radial. Maintain 500 feet until 12 nm on the departure radial.

Note

COD aircraft will depart straight ahead unless otherwise directed and maintain 500 feet until 12 nm.

5.15.3.4 Case III Departure

This departure shall be used whenever existing weather at the ship is below Case II departure minimums and during all night operations except as modified by the OTC or commanding officer. Case III departures are compatible only

with Case III recoveries. The launch shall be on departure control frequency. A minimum launch interval of 30 seconds shall be used between aircraft. When possible, a 60-second interval will be provided when launching a jet aircraft following a turboprop.

WARNING

- The air officer must be acutely aware of the responsibility to ensure the initial separation between bolter/waveoff and departing aircraft during CARQUAL and cat-trap-cat evolutions.
- CATCC's restricted radar coverage (blindspot) ahead of the ship requires aircrew to exercise good lookout doctrine upon departure.

5.15.3.4.1 Jet Aircraft

Climb straight ahead accelerating at 300 knots crossing 5 nm at 1,500 feet or above. At 7 nm, execute turn to fly the 10 nm arc until intercepting the departure radial.

5.15.3.4.2 Turboprop Aircraft

Climb straight ahead to 1,000 feet, accelerating to 250 knots after level-off. At 5 nm, turn to intercept the 7 nm arc and arc to the departure radial. Maintain 1,000 feet until 12 nm on the departure radial.

Note

COD aircraft shall depart straight ahead unless otherwise directed and maintain 1,000 feet until 12 nm.

5.15.3.5 Case II/III Rendezvous

Case II/III aircraft shall rendezvous between 20 and 50 miles from the carrier on the left side of the departure radial at a prebriefed altitude (for example, 1,000 feet above the cloud layer). This does not preclude other visual rendezvous procedures as directed by air wing doctrine.

5.15.3.6 Fixed-Wing IMC at Altitude

The first aircraft of each flight shall report to departure control passing FL 180 if not on top. Unless operational necessity dictates otherwise, the departure controller shall assign aircraft that are IMC and appropriate altitude; for example, with four aircraft expected on the same departure radial, altitude assignments would be as follows:

1. First aircraft — FL 220.
2. Second aircraft — FL 210.
3. Third aircraft — FL 200.
4. Fourth aircraft — FL 190.

Note

Carrier-based aircraft shall fly MSL altitudes below 18,000 feet MSL and flight levels at and above 18,000 feet MSL unless regional supplementary procedures, as published in the FLIP Planning document, dictate otherwise.

CHAPTER 6

Recovering Aircraft

6.1 ARRIVAL PROCEDURES

6.1.1 Entering the Carrier Control Area

Inbound flights shall be turned over to marshal control for further clearance to the marshal pattern. Aircraft that were unable to check in with strike, mission, or marshal control because of communication difficulties should proceed as directed in Figure 4-1.

WARNING

Aircraft recovering aboard the CV with fuel other than JP-5 shall notify the appropriate authority in accordance with ship/air wing SOP prior to recovery.

6.1.2 Arrival Information

The flight leader shall provide the following information when checking in with marshal control:

1. Position.
2. Altitude.
3. Fuel state (low state in flight).
4. Total number of aircraft in flight (lineup).
5. Type approach requested — UTMs sweet (if applicable).
6. Other pertinent information such as navigational aid status, hung or unexpended ordnance, weather, etc., that may affect recovery.
7. COD load report.

6.2 CASE I

Note

Case I/II recoveries of fixed wing aircraft shall not be conducted concurrently with Case III departures.

This approach may be utilized when it can be anticipated that flights will not encounter instrument conditions at any time during the descent, break, and final approach. A ceiling of 3,000 feet and 5 miles visibility within the carrier control zone is required. The flight leader retains full responsibility for proper navigation and separation from other aircraft. All returning flights will check in with marshal control when entering the carrier control area or as soon as they are released by another controlling agency. Marshal control shall acknowledge the check-in and provide the following information:

1. Case recovery.
2. Expected BRC.
3. Altimeter
4. Expected “Charlie” time (if other than briefed).

Aircraft shall normally be switched to tower control at 10 nm after reporting the ship in sight ("see you").

6.2.1 Jet/Turboprop Aircraft Port Holding/Spin Pattern

The jet and turboprop port holding pattern is a left-hand pattern tangent to the BRC or expected BRC with the ship in the 3-o'clock position and a maximum diameter of 5 nm. Flights shall be established at their assigned port holding pattern altitude 10 nm prior to entering the pattern. Entry shall be tangential with wings level. Minimum altitude assignment shall be 2,000 feet MSL. A minimum of 1,000 feet vertical separation between holding altitudes shall be maintained. The squadron/unit recovery order and altitude assignment shall be as promulgated by ship/air wing doctrine. Overhead aircraft should hawk the deck, planning to break to arrive at the ramp as early as possible after the deck is ready. Aircraft should descend in port holding (collapse the stack) when their interval has vacated the next lower altitude. Recovery order is by overhead stack altitude, or as directed. All aircraft shall maintain the prescribed separation and landing order in the port holding pattern and throughout the descent.

Note

A low overhead port holding pattern at 1,200 feet may be used at the discretion of the Air Officer and should be used as the primary method of recovering COD aircraft and/or other aircraft with a requirement to recover first.

Aircraft holding at 7,000 feet MSL and above shall descend outside of 10 nm to enter port holding. Departure from the port holding pattern for break entry shall be accomplished aft of the ship's beam. Descent to the break from the port holding pattern is commenced by the lowest aircraft or flight in time to meet the ramp time. This descent should be planned so as to arrive at the initial (3 miles astern, 800 feet) wings level, paralleling the BRC.

WARNING

Flight leaders shall exercise caution to avoid aircraft in the tanker pattern.

The flight leader shall either execute a normal break or spin for all or a portion of his flight, depending upon the number of aircraft in the landing pattern. A spin should normally be initiated at the bow. The spin pattern shall be flown at 1,200 feet within 3 nm of the ship. A maximum of 6 aircraft shall be in the landing pattern at one time. This number may be modified by the air officer. No aircraft shall break more than 4 miles ahead of the ship. No more than 2 sections are authorized in the spin pattern at one time. Pilots must exercise caution to avoid departing aircraft and aircraft in the starboard holding pattern. Should a Delta be given after commencing descent from the port holding pattern, but prior to entering the landing pattern, aircraft shall climb or descend as required and enter the spin pattern (1,200 feet) unless specifically directed otherwise. Aircraft in the landing pattern shall continue to maintain proper interval, flying the landing pattern at 600 feet until otherwise directed. Flights directed to spin or reenter the port holding pattern shall climb only on the upwind or crosswind leg ahead of the ship's beam. Aircraft reentering the break from the spin pattern have priority over aircraft entering from the port holding pattern.

6.2.2 COD Aircraft Starboard Holding

The starboard holding pattern shall be a right-hand racetrack pattern between 45 and 135 degrees relative to the BRC at 1,000 feet or altitude as assigned by the Air Officer (no lower than 500 feet), with the closest point of approach no closer than 1 nm. When ready, the Air Officer will give a charlie to aircraft in the starboard holding pattern.

WARNING

Due to the risk of forward firing ordnance, aircraft in the starboard holding pattern shall be notified when the dearming area is hot.

6.2.3 VFR Day Fixed Wing Carrier Landing Pattern

The landing pattern depicted in Figure 6-1 is used by fixed wing aircraft during day VFR (Case I/II) operations. The purpose of day case I/II operations is to allow for a primarily pilot controlled pattern and reduce total recovery time compared to case III operations.

6.2.3.1 Landing Pattern Entry

Entry into the break shall be made at 800 feet. All breaks shall be level. A descent to 600 feet to intercept the downwind leg of the landing pattern shall commence when established downwind. Descent to 600 feet shall be completed before reaching the 180 position.

6.2.3.2 Downwind Leg and Approach Turn

The landing pattern downwind leg is flown at 600 feet, 1 to 1-1/2 nm abeam the ship's stern. Aircraft should maintain a minimum of 150 kts in the landing pattern until approaching the ship's bow. Aircraft in the VFR Day Landing Pattern should be established in the intended landing configuration, wings level at 600 feet with landing checklist complete by the 180. At the 180, the aircraft should begin the approach turn and gradual descent to pass the 90-degree position at 450 to 500 feet. The pilot should continue the approach turn until intercepting the extended centerline of the ship's angled deck and acquire the optical landing system meatball image. The approach turn from the 180 to the start should take 45 seconds.

6.2.3.3 Groove and Touchdown

The aircraft should roll wings level on centerline with a centered ball to allow a 15 to 18 second groove before aircraft touchdown on deck. At touchdown the pilot shall add power as appropriate, and prepare to bolter. Following arrestment, the pilot shall follow the instructions of the aircraft directors and comply with the procedures in NAVAIR 00-80T-120 (CV Flight/Hangar Deck NATOPS manual).

6.2.3.4 Waveoffs

Pilots shall be prepared to be waved off at any time during a landing approach. Aircraft approaching in an unsafe condition or situation (e.g., too low, insufficient interval, etc) will be waved off rather than be allowed to continue to touchdown. Upon being directed to wave off, pilots shall add power as necessary to stop the aircraft's rate of descent and commence a climb.

6.2.3.5 Landing Pattern Upwind Leg

Once clear of the ship following a waveoff, touch and go, or bolter, the pilot shall turn to parallel the BRC. Corrections to parallel the BRC shall not be attempted until a definite climb has been established. The climb to 600 feet landing pattern altitude should normally be completed prior to commencing the turn to the downwind leg. Aircraft continuing in the landing pattern shall take normal interval on other traffic in the pattern.

6.2.3.6 Landing Pattern Departure

Aircraft departing the case I/II pattern shall remain in the pattern until established on the upwind leg. From the upwind leg, aircraft shall clear the pattern by executing a 20 degree turn to starboard followed by a 20 degree turn reversal to parallel the BRC.

Figure 6-1. VFR Day Fixed Wing Carrier Landing Pattern

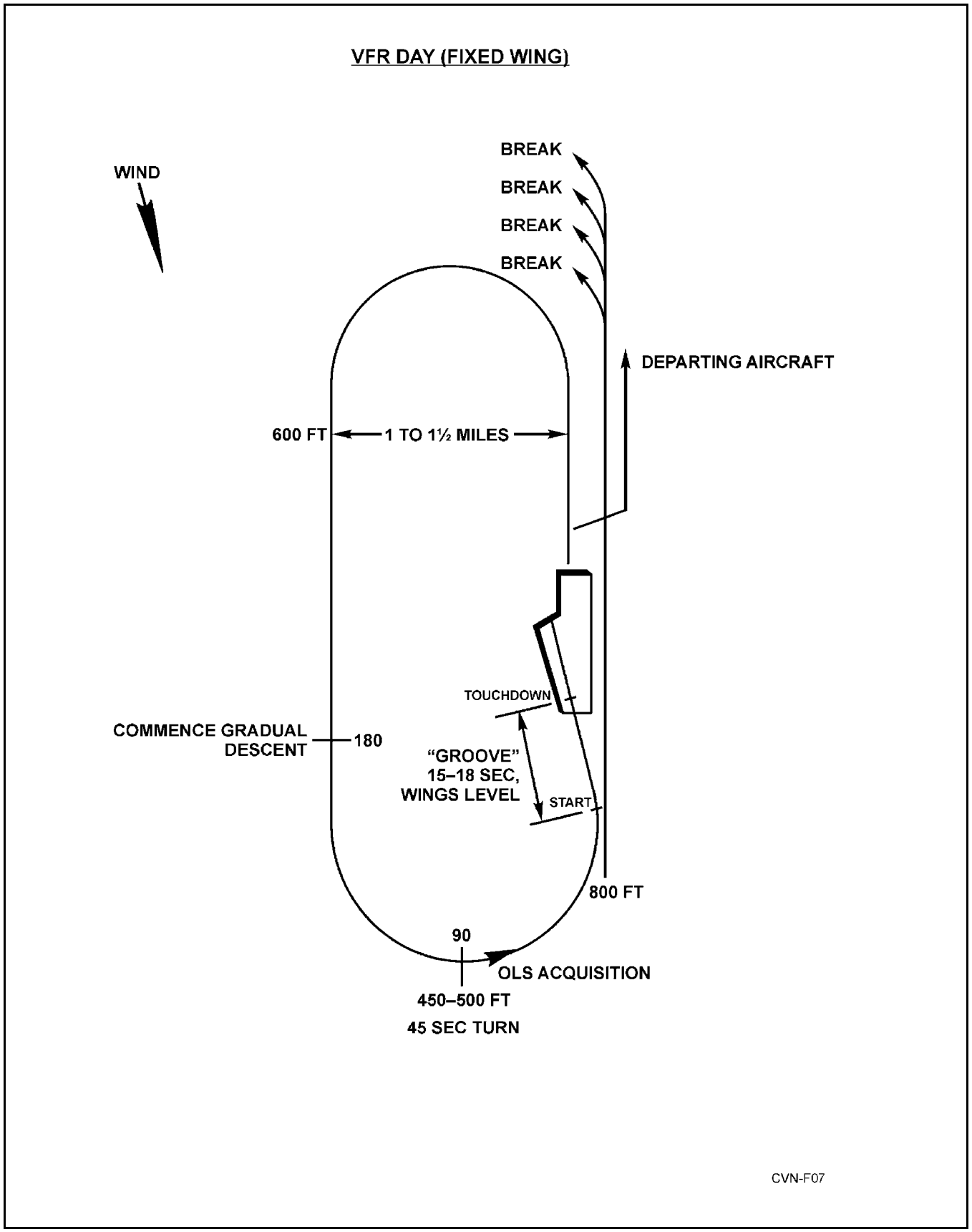

6.2.4 Voice Reports

Flight leaders shall make the following voice reports.

POSITION	REPORT
Descending from the port holding pattern	“Commencing”
Three miles astern	“Initial”
Entering spin pattern (when applicable)	“Spinning”
Departing the landing pattern to reenter port holding.	“Departing at ____ ” (nm)

6.2.4.1 Low Visibility Voice Reports

Note

Anyone can recommend that Low Visibility Reports be initiated.

The following calls shall be used upon Air Officer's announcement of “99 low-vis-calls.”

“Commencing”.

“Initial”.

“Breaking at___” (nm).

“Crosswind at ___” (nm).

“Departing at ___” (nm).

“Spinning”

“Spin 90”.

Ball call.

Flight leaders should amplify low-vis calls as required to add to overall situational awareness and safety of flight.

6.2.5 ZIP LIP

Case I procedures shall apply, except for elimination of prescribed voice reports. The flight leader first in recovery order shall observe the deck and plan his recovery to be at the ramp as soon as a ready deck is available. Should unprogrammed, unbriefed, or straggler flights arrive for recovery, ZIP LIP shall be broken as required to ensure safety of flight.

Note

ZIP LIP shall be broken anytime an apparent safety of flight situation develops.

6.2.6 Drag

If a straight-in approach (drag) is requested, it shall be initiated at sufficient distance astern for the aircraft to be established positively on glidepath and approach airspeed at a minimum of 1-1/2 nm for jet/turboprop aircraft.

Note

COD aircraft conducting straight-in (drag) approach from port holding or starboard delta should be established at 600 feet within 3 nm AFT of the ship to de-conflict with aircraft descending to the initial (3 nm astern, 800 feet) from the port holding pattern.

6.3 CASE II

This approach shall be utilized when weather conditions are such that the flight may encounter instrument conditions during the descent, but visual conditions of at least 1,000 feet ceiling and 5 miles visibility exist at the ship. Positive control shall be utilized until the pilot is inside 10 nm and reports the ship in sight. During Case II recoveries, CATCC shall be manned and prepared to assume control of a Case III recovery in the event weather conditions deteriorate. The maximum number of aircraft in the landing pattern is limited to six. During Case II recoveries, if the spin pattern is unavailable due to weather, aircraft unable to break prior to 4 nm upwind should depart and switch to their previously assigned approach frequency.

Note

Case II recoveries shall not be conducted concurrently with Case III departures. Should doubt exist regarding the ability to maintain VMC, Case III recoveries shall be utilized.

Penetrations in actual instrument conditions by formation flights of more than two aircraft are not authorized. Flight leaders shall follow Case III approach procedures outside of 10 nm. When within 10 nm with the ship in sight, flights will be shifted to tower control and proceed as in Case I. If the flight does not have the ship in sight at 10 nm, the flight may descend to not less than 800 feet. If a flight does not have the ship in sight at 5 miles, both aircraft shall be vectored into the bolter/waveoff pattern and action taken to conduct a Case III recovery for the remaining flights.

Note

Weather conditions permitting, helicopters may be assigned Case I procedures concurrently with Case II and III fixed-wing aircraft operations.

6.4 CASE III

This approach shall be utilized whenever existing weather at the ship is below Case II minimums and during all flight operations conducted between one-half hour after sunset and one-half hour before sunrise except as modified by the OTC or carrier commanding officer. Night/IMC Case III recoveries shall be made with single aircraft. Section approaches will be approved only when an emergency situation exists.

Note

Case III recoveries may be conducted concurrently with Case I and II launches.

At night during VMC conditions, helicopters may be cleared to the starboard holding pattern. The same airspeed and spacing restrictions will apply as in day VMC.

6.4.1 Marshal Procedures

Note

Advisory control is provided by marshal from check-in until the aircraft is advised of “radar contact” which indicates positive control.

6.4.1.1 Jet/Turboprop Aircraft

The primary marshal fix is the 180-degree radial relative to the expected final bearing at a distance of 1 mile for every 1,000 feet of altitude plus 15 nm (angels +15). The holding pattern is a left-hand, 6-minute racetrack pattern. The inbound leg shall pass over the holding fix. In no case will the base altitude be lower than 6,000 feet. All aircraft shall be established at their assigned marshal altitude by no closer than 10 nm from the assigned marshal fix. Also, aircraft shall avoid climbs or descents when inside 30 radials from the marshal radial on the holding side and 10 radials on the non-holding side, unless under positive control.

WARNING

Use of ships TACAN during non-radar control is necessary to maintain required separation standards.

6.4.1.2 Emergency Marshal Fixes

All fixed-wing aircraft are issued an emergency marshal radial 150 degrees relative to the expected final bearing at a distance of 1 mile for every 1,000 feet of altitude plus 15 miles (angels +15). Lowest altitude for assignment is 6,000 feet for turboprop/jet. Holding sequence is jets, then turboprops. Holding procedures are right-hand, 6-minute racetrack patterns. The inbound leg shall pass over the holding fix. Helicopter emergency marshal radial is the same as normal helicopter marshal radial with helicopter emergency holding normally commencing at 7 miles.

6.4.1.3 Overhead Marshal

Overhead marshal may be utilized as geographical or operational circumstances necessitate. The assigned inbound magnetic heading to the holding fix should coincide with the outbound magnetic radial of the approach. If overhead marshal is used as the emergency marshal fix, EEATs should be every other minute.

6.4.1.4 En Route Radar Approaches

In the event an aircraft or flight cannot reach the marshal point in time to make an assigned approach time, an en route radar approach may be used to place the flight in the proper approach sequence.

The marshal/approach controller shall employ positive radar control and provide the pilot the purpose and a brief description of the intended penetration whenever possible.

6.4.1.5 Marshal Altitude Assignment

Every effort should be made to anticipate weather conditions and provide marshaling in visual conditions if practical. Aircraft below an overcast should not be required to climb into the overcast to comply with base altitude limits if marshal control can safely exercise control below the overcast. Those aircraft above an overcast should be assigned altitudes above the overcast and retained in formation where possible. Under instrument conditions, a section of two aircraft is the maximum number authorized in any one flight.

6.4.1.6 Marshal Altitude Separation

Fixed-wing aircraft will normally have a minimum of 1,000 feet verical separation.Vertical separation may be reduced to 800 feet when inside 12 nm. Helicopters shall be separated by a minimum of 500 feet vertically.

6.4.1.7 Marshal Airspeed

Aircraft will normally fly at airspeeds in accordance with the applicable aircraft NATOPS flight manual.

6.4.1.8 Bow-On-Recovery

A bow-on-recovery occurs when the marshal radial is located ahead of the carrier. Significant potential conflict exists between departing and recovering aircraft due to airspace constraints associated with opposite direction traffic flow and the possibility of a radar coverage “blind spot” ahead of the ship if all shipboard radar sensors are not operational. CATCC shall communicate bow-on-recovery to all aircrew as soon as bow-on-recovery is determined. Departing aircraft will receive positive control to ensure departing aircraft remain clear of recovering aircraft until course conflict is resolved. CATCC shall provide recovering aircraft positive control and sequencing to ensure adequate separation is maintained.

6.4.2 Marshal Instructions

Marshal control shall ensure the following information has been provided each aircraft prior to entering marshal:

1. Case recovery.
2. Type approach.
3. Expected final bearing.
4. Altimeter.
5. Marshal holding instructions.
6. Expected approach time.
7. Expected approach button.
8. Time check.
9. Vector to marshal (if required).
10. Multiple marshal stack information (radials/altitudes).

Note

When overhead marshal is utilized, the assigned outbound penetration bearing shall be updated during recovery to maintain a minimum of 25 degrees clockwise from the reciprocal of the final bearing.

6.4.3 General Instructions

The following information shall be provided prior to commencing the penetration/approach:

1. Case recovery.
2. Type approach.
3. Final bearing.
4. Weather and deck conditions.
5. Divert field/fuel data.
6. Time hack (30 seconds minimum) using GPS time.
7. USW datum (if applicable).
8. Density altitude (if applicable).
9. MOVLAS recovery, including station number and location (tactical situation permitting).
10. COD RETRO report (if applicable).

To reduce radio traffic, items of general or collective interest may be transmitted as a “99” broadcast by marshal or approach control.

6.4.4 Departing Marshal

Each pilot shall adjust his holding pattern to depart marshal at the assigned Expected Approach Time (EAT). Early or late departure shall be reported to marshal control immediately so that control adjustments can be accomplished if required.

6.4.5 Initial Separation

Unless weather or operating circumstances dictate otherwise, aircraft departing marshal will normally be separated by 1 minute. Adjustments may be directed by CATCC, if required, to ensure proper separation.

6.4.6 Frequency/IFF/SIF Changes

Changes in radio communication frequencies, IFF and/or SIF mode/code that require accomplishment by the pilot should be made no later than platform except under emergency conditions. The aircraft shall be in straight and level flight should such changes be required below an altitude of 2,500 feet.

6.4.7 Instrument Approach Procedures

The approaches described in this paragraph are designed primarily for single-carrier operations; however, with slight modification, they can be used for the following:

1. Multiple-carrier operations.
2. Letdown under reduced navigation and control.
3. Letdown using SAR as navigational aids with AEW control.
4. Recoveries during EMCON conditions.

The approach charts (Figure 6-2 to Figure 6-4) are designed for use with all aircraft carriers regardless of weather conditions. It is incumbent on each ship to utilize the standard approaches so that pilots may safely transition from ship to ship or from visual to instrument conditions with a minimum change in operating procedures.

6.4.7.1 Approach Minimums

The commanding officer shall establish approach minimums that reflect significant changes in operational capabilities, such as may be occasioned by decreased proficiency of the CATCC or embarked air wing. However, absolute minimums are as provided in Figure 6-5 (see LSO NATOPS Manual for CARQUAL minimums).

When a suitable bingo field is available, aircraft shall not commence an approach if the reported weather is below the minimums in Figure 6-5 unless it has been determined that the aircraft has sufficient fuel to proceed to the bingo field in the event of a missed approach.

6.4.7.2 Penetration/Approach

1. Jet/turboprop aircraft executing an instrument approach (CV-1/CV-2) shall descend at 250 KIAS and 4,000 feet per minute until platform is reached, at which point the descent shall be shallowed to 2,000 feet per minute. Aircraft shall pass through the 6 nm fix at 1,200 feet, at final approach speed. Unless otherwise directed, aircraft shall commence transition to a landing configuration at 8 nm.
2. Jet/turboprop aircraft executing a radar approach (radar vectors) shall be vectored to intercept final bearing no closer than 4 nm at 1,200 feet. Aircraft shall transition to a landing configuration as directed.

Figure 6-2. Legend Chart for Aircraft Carrier Instrument Approach Procedures

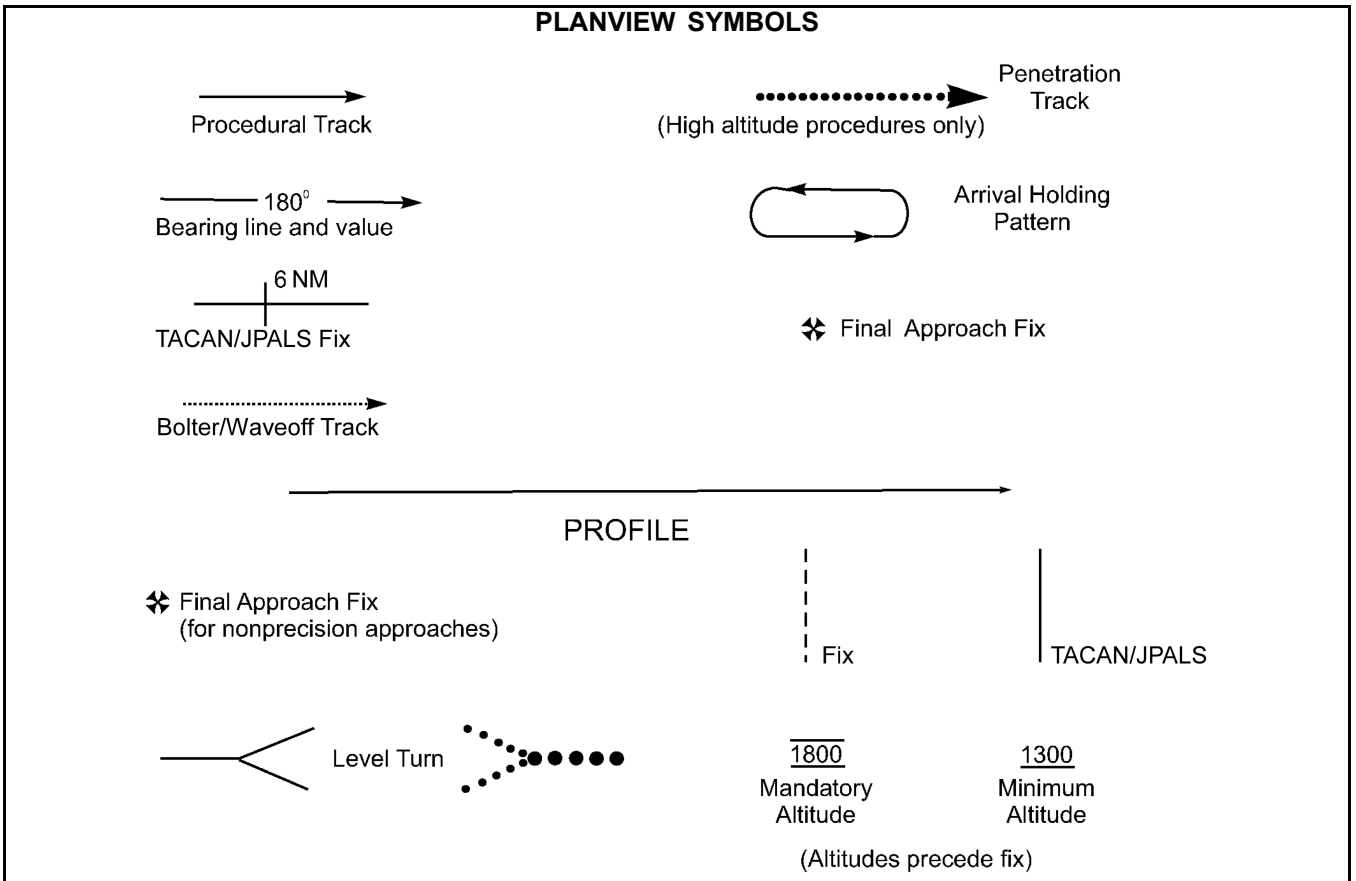

GENERAL INFORMATION AND ABBREVIATONS

All distances and visibility data in nautical miles. All elevations in feet above MSL except weather ceiling data in feet above flight deck. All radials/bearings are magnetic.

ACLS	—	Automatic Carrier Landing System	IAF	—	Initial Approach Fix
ASR	—	Air Surveillance Radar	ICLS	—	Instrument Carrier Landing System
BRC	—	Base Recovery Course (Mag hdg of ship)	JPALS	—	Joint Precision Approach and Landing System
CH	—	Channel	MDA	—	Minimum Descent Altitude
DH	—	Decision Height for ACLS, ICLS, JPALS	MSL	—	Mean Sea Level
FAF	—	Final Approach Fix	NM	—	nautical miles
FB	—	Final Bearing	TACAN	—	Tactical Air Navigation
HAT	—	Height Above Touchdown			

Figure 6-3. Approach Chart CV-1 TACAN/JPALS

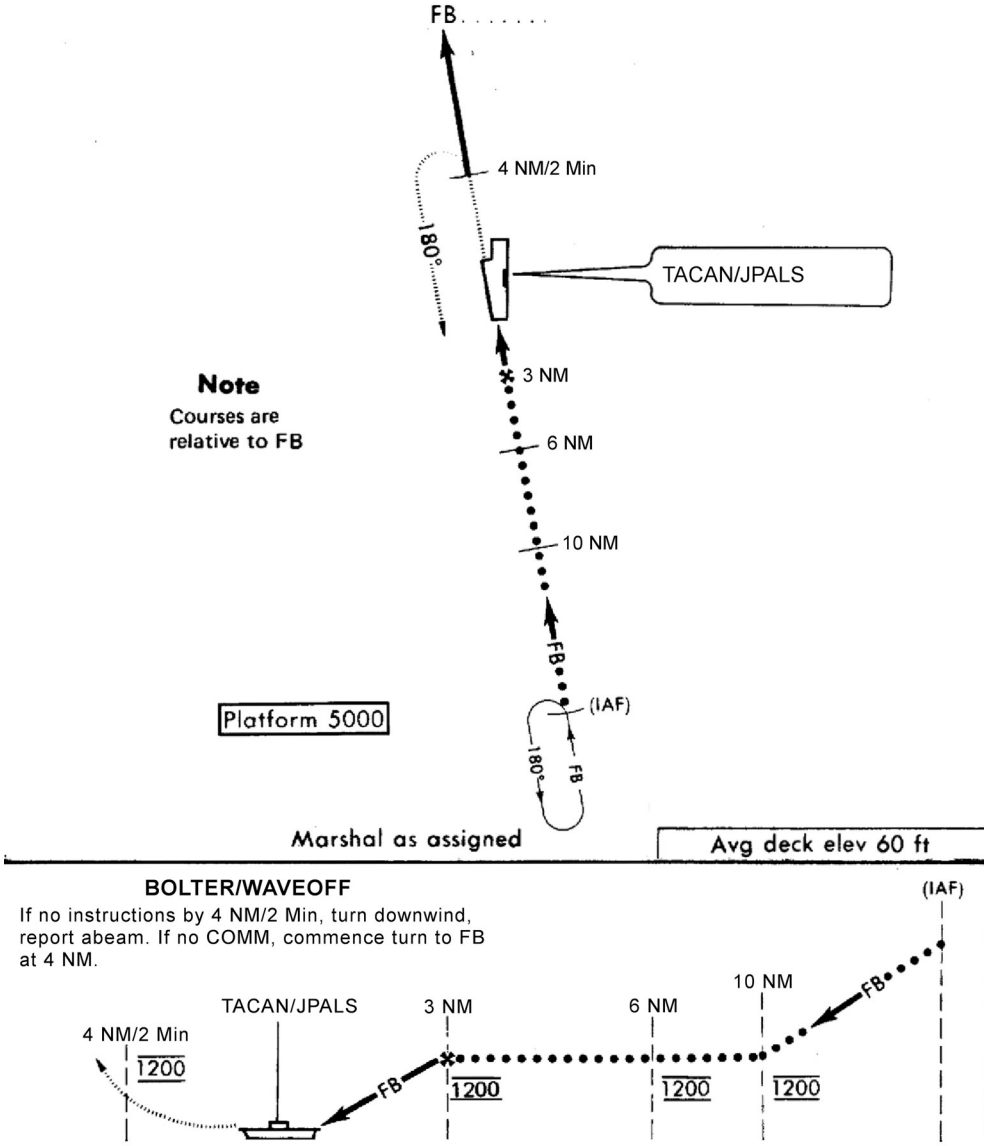

Highest Obstruction — 250’	Flight Deck Elevation — 60’		
	MDA or DH-Vsby, HAT, (Weather Minimum)		
Category	Jet	Turboprop	Tiltrotor
ASR/TACAN/JPALS Non-Precision	660-1¼ 600 (600-1¼)	460-1 400 (400-1)	360-¾ 300 (300-¾)
ICLS/JPALS	360-¾ 300 (300-¾)		
ICLS/JPALS w/ACLS	260-½ 200 (200-½)		
ACLS Mode IA, II, IIT, III			
ACLS Mode I	As Certified		

Figure 6-4. Approach Chart CV-2 TACAN/JPALS Overhead

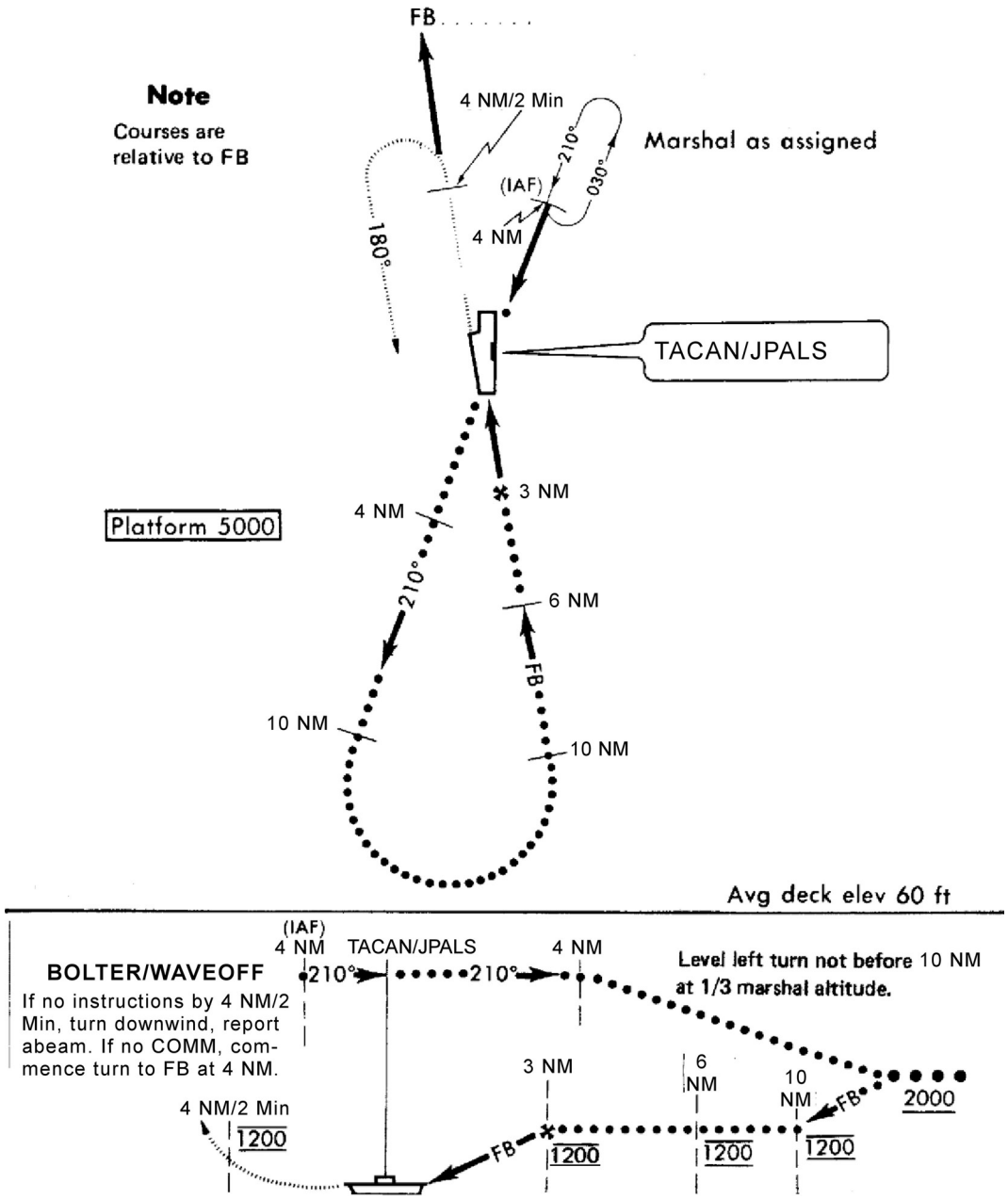

Highest Obstruction — 250’	Flight Deck Elevation — 60’		
	MDA or DH-Vsby, HAT, (Weather Minimum)		
Category	Jet	Turboprop	Tiltrotor
ASR/TACAN/JPALS Non-Precision	660-1¼ 600 (600-1¼)	460-1 400 (400-1)	360-¾ 300 (300-¾)
ICLS/JPALS	360-¾ 300 (300-¾)		
ICLS/JPALS w/ACLS	260-½ 200 (200-½)		
ACLS Mode IA, II, IIT, III			
ACLS Mode I	As Certified		

Figure 6-5. Approach Weather Minimums

AIRCRAFT	TYPE APPROACH	MINIMUMS
JET	ASR/TACAN/ JPALS-NONPRECISION	600-1¼
	ICLS	300-¾
	ICLS w/ACLS	200-½
	ACLS MODE IA, II, IIT, III	200-½
	ACLS MODE I	AS CERTIFIED
	JPALS	300-¾
	JPALS w/ACLS	200-½
TURBOPROP	ASR/TACAN	400-1
	ICLS	300-¾
	ICLS w/ACLS	200-½
	ACLS MODE, II, IIT, III	200-½
TILTROTOR	ASR/TACAN	400-1
	ACLS MODE III	200-½
HELICOPTER	ASR/TACAN	300-¾
	ACLS MODE III	200-½

Note

- ACLS Mode I qualified aircraft without an operating ICLS displayed on the pilot's HUD may be certified to minimums of 200-foot ceiling and 1/2 nm visibility.
- ACLS Mode I qualified aircraft with an operating ICLS displayed on pilot's HUD may be certified to minimums less than 200-foot ceiling and 1/2 nm visibility.
- JPALS qualified aircraft monitored by ACLS may be certified to minimums of 200-foot ceiling and 1/2 nm visibility.

6.4.7.3 Correcting to the Final Bearing

1. Jet or turboprop aircraft on the CV-1 approach will correct from the marshal radial to the final bearing at 20 miles in the following manner:

   a. The pilot shall make a gradual correction when the final bearing is within 10 degrees of the reciprocal of the marshal radial.

   b. The pilot shall turn 30 degrees when the final bearing is greater than 10 degrees from the reciprocal of the marshal radial. If not established on the final bearing at 12 miles, the pilot shall fly the 12-mile arc until intercepting final bearing.

2. Aircraft on the CV-2 approach shall correct to the final bearing in the following manner:

   a. If final bearing decreases, fly 90 degrees of penetration turn and arc to the new final bearing.

   b. If final bearing increases, fly the standard penetration turn continuing to intercept the new final bearing prior to the 10 nm fix.

6.4.7.4 Instrument Approaches

6.4.7.4.1 ACLS Mode I Approach (With ILM)

Aircraft conducting an ACLS Mode I approach with ceiling and visibility less than 200 feet and/or 1/2 mile must be equipped with an operable independent monitor (AN/ARA-63/AN/ARN-138). For those qualified aircraft equipped with AN/ARA-63/AN/ARN-138 conducting a precision approach to a AN/SPN-41 certified ship, the following procedures shall be followed:

1. The pilot should engage aircraft APC and AFCS. Normally between 4 to 8 miles, the pilot will receive via data link a landing check discrete signal to indicate positive data-link communications between aircraft and ship.
2. The final controller will acquire the aircraft between 3.5 and 8 miles and the ACLS ready/lock-on discrete light will illuminate. At that time, the final controller shall report lock-on with range, verify needles, issue instructions as necessary for the aircraft to intercept the centerline, and instruct the pilot to report "coupled."
3. At lock-on, the pilot selects ACLS needles. Agreement of aircraft needles and shipboard ACLS display will verify correct ACLS datalink address. Agreement of aircraft range and shipboard ACLS display will verify ACLS is locked on to the correct aircraft. For example: "201 lock-on, 5 miles. Say needles." The pilot shall report needle position and should report range. For example: "201, needles up and right, 5 miles." The controller reports, "Concur report coupled."

WARNING

The controller shall not transmit commands until the pilot has reported "coupled."

Note

If aircraft is unable to couple or uncouples, continue approach as Mode II, ICLS, Mode III.

4. The final controller shall report "sending commands". The command control discrete light will illuminate, indicating the ACLS system is sending command signals via data link. The pilot shall acknowledge receiving data-link commands by reporting "command control." Thirty seconds coupled flight should be flown prior to intercepting glidepath.
5. The final controller shall advise the pilot when "approaching tipover" (glidepath) and should issue range each mile. At tipover, the pilot should switch to ILM, if available, to verify agreement of ILM and AN/SPN-46 displays. The ILM shall be used to monitor the approach to ACLS Mode I minimums. ILM and AN/SPN-46 displays shall agree to within 2 to 3 needle widths until reaching ACLS Mode I minimums.
6. The final controller shall advise the pilot at minimums unless the LSO has previously assumed responsibility. The pilot shall respond with "ball" report and include the word "coupled." For example: "301 Hornet ball, five point three, coupled." Expect ILM needle deviation errors inside one-quarter nm from touchdown. Use the Fresnel lens as the primary monitor inside ACLS Mode I minimums.

WARNING

- ACLS discrete lights shall be closely monitored throughout the approach to ensure that the aircraft remains coupled to ACLS Mode I commands and is working properly.
- The CATCC Officer shall suspend Mode I approaches when ACLS Certification/Verification restrictions (i.e., WOD limits, deck motion parameters, etc.) are exceeded.

6.4.7.4.2 ACLS Mode IA Approach (ILM Not Required)

Mode IA approaches are conducted the same as Mode I except the pilot shall uncouple at or prior to reaching approach minimums and report “uncoupled.” If the pilot uncouples at “ball” call, pilot shall include the word “uncoupling” in the ball report. For example: “201 uncoupling, hornet, ball, five point three, manual/auto.” When the pilot reports uncoupling, the controller shall downgrade the ACLS to Mode II.

6.4.7.4.3 ACLS Mode II Approach (ILM Not Required)

1. Mode II approaches are conducted the same as Modes I/IA until receipt of ACLS ready/lock-on discrete light. At that time, the controller shall report lock-on with range, verify needle presentation, and issue instructions as required. For example: “201, lock-on, 5 miles, say needles.” The pilot shall report needle position. For example: “201, needles up and right.” The controller shall concur or downgrade the approach to ICLS or Mode III and advise the pilot. For example: “201, concur” or “201, disregard needles, downgrade, fly Bullseye or Mode III.” The controller shall monitor the approach, advise the pilot when approaching glidepath, and should inform him of range each mile. The controller shall advise the pilot when at minimums unless the LSO has previously assumed responsibility. The pilot shall respond with a ball report.
2. ACLS Mode IIT approach is a training approach using needles instrument presentation (Mode II) as well as Mode III information.

6.4.7.4.4 ACLS Mode III Approach

After slowing to approach speed, the 1,200-foot altitude will be maintained until intercepting the glidepath (approximately 3 miles, dependent upon glideslope angle utilized) unless otherwise directed.

Helicopters shall pass the 3 nm fix at 500 feet in a landing configuration and maintain 500 feet until interception of the glidepath or until otherwise directed.

The controller shall provide glideslope, azimuth, and range information. Pilots may use the 400 foot-per-mile rule to help schedule glideslope maintenance. The controller shall advise the pilot when at minimums unless the LSO has previously assumed responsibility. The pilot shall respond with a ball report.

Note

Lock-on shall be maintained until touchdown during all ACLS approaches to provide the LSO with essential course and glidepath information.

6.4.7.4.5 JPALS Approach

JPALS-capable aircraft receive ship data along with GPS data to compute aircraft navigation data. JPALS will support relative navigation, precision navigation (needles), and on-deck Radio Frequency (RF) Inertial Navigation System (INS) alignment via a 25 kHz UHF transmission to JPALS-capable aircraft.

Aircraft conducting a JPALS approach where the ceiling and visibility is less than 300 feet and ¾ mile must be monitored by the CATCC Final Controller using the ACLS.

The Final Controller will inform a JPALS-capable aircraft to fly Star Rider and attempt to lock-on (non-beacon) with ACLS in order to provide aircraft nearest data to PriFly and LSO. With the ACLS lock-on, the Final Controller will advise the pilot when "approaching tipover". The pilot will inform the Final Controller if unable to fly Star Rider. For example: "201 negative star rider".

Note

JPALS UHF Data Broadcast (UDB) does not provide for Magnetic Variation (MagVar) corrections. JPALS RelNav bearing can be used if the aircraft has the correct MagVar that correlates to the ship’s MagVar. If there is a disparity between the TACAN and JPALS RelNav bearing, the pilot should default to using the TACAN.

6.4.7.4.6 ICLS Approach

AN/SPN-41 information is used to intercept and fly centerline and glideslope, and TACAN/JPALS used for range information until reaching ICLS minimums. AN/SPN-41 information may be used to achieve lineup early in the approach.

6.4.7.4.7 Nonprecision Approach

When precision approach radar or suitable visual landing aids are not available, jet aircraft on final approach should continue descent to 600 feet (400 feet for turboprop aircraft) after passing the 3 nm fix. The final controller will provide sufficient information to the pilot in order to maintain an accurate azimuth and altitude profile until reaching nonprecision minimums.

Note

Per NATOPS Instrument Flight Manual (NAVAIR 00-80T-112) the pilot should establish a rate of descent which will ensure reaching the MDA at or before the missed approach point.

6.4.8 Missed Approach/Waveoff/Bolter

Jet and turboprop aircraft shall climb straight ahead on the extended final bearing to 1,200 feet altitude and wait for instructions from approach control.

Helicopters shall climb straight ahead on the extended final bearing to 300 feet altitude and await instructions from approach control.

All waveoff/bolter pattern turns shall be level.

If no instructions are received prior to reaching 4 miles or 2 minutes ahead of the ship, the pilot will attempt to make contact with the ship, giving identification and position. If instructions are not received, the pilot will assume communication failure and execute a turn downwind reporting downwind abeam. If radio contact is not reestablished, the pilot will proceed downwind and reenter as follows:

1. Fixed-wing aircraft commence turn to final at the 4 nm or 2 minutes past abeam position.
2. Helicopters reenter through the 3 nm fix or turn inbound 2 minutes past abeam.
3. ACLS aircraft shall be alert for data-link displays.

6.4.9 Delta Procedures

In the event the deck becomes fouled or an excessive number of aircraft bolter or wave off, the CATCC Officer shall issue via marshal control a signal Delta. The signal Delta shall be accompanied by the number of minutes of delay (even increments but never less than four) required to resume recovery operations (i.e., Delta 4, Delta 6, and so forth).

1. In marshal — Aircraft shall continue holding and await assignment of new EAT.
2. Commenced aircraft — Commenced aircraft above 7,000 feet shall level off at the next lower odd altitude and hold on the inbound bearing at a range in nm equal to holding altitude in thousands of feet plus base distance (angels + 15). The holding pattern shall be the same as the original marshal pattern. Aircrews shall report established in holding with new altitude and await assignment of new EAT. Aircraft at or below 7,000 feet will continue the approach.

Note

CV-2 aircraft that have descended from assigned marshal altitude shall return to overhead holding at the next lower odd altitude. CV-2 aircraft that have commenced but have not vacated their last assigned marshal altitude shall return to overhead holding at that altitude.

3. Issuance of EATs — Marshal control shall issue new EATs as soon as possible. To preclude two aircraft having the same EAT, new EATs shall be issued from the latest to the earliest (i.e., top of the holding pattern to the bottom). Aircrews shall acknowledge receipt of the new EAT.

4. Lost communications — Aircraft in marshal shall commence approach at the last acknowledged EAT. Aircraft between marshal and 7,000 feet that have established Delta holding and subsequently realize lost communications prior to acknowledging new EAT shall commence approach immediately. All lost communication aircraft shall squawk the appropriate Mode I (HEFOE) and III codes. Pilots shall take a 30 degrees cut to the right to intercept a track 10 degrees to the right of the inbound bearing and continue inbound to the ship.

WARNING

Be alert for possible aircraft in Delta holding at lower altitudes.

6.4.10 Night EMCON Recovery

Reference NTTP 3-03 for EMCON Procedures.

6.4.11 Communication or NAVAID Failure During Approach

6.4.11.1 Aircraft Alone

If navigational equipment is available, lone aircraft will continue approach. Pilot may utilize emergency survival radio on guard (243.0) frequency if time and safe control of aircraft permit. If all communication and navigational equipment is lost, the pilot will proceed as follows.

The pilot may elect to continue the approach by dead reckoning. Having made this decision, he will continue DR until at least 2 minutes past his expected ramp time, then climb on final bearing heading to VMC, squawk EMERGENCY, and conserve fuel. If below the overcast, the pilot may elect to fly a search pattern to locate the ship.

If the pilot elects to discontinue the approach, he will climb on final bearing heading to VMC and expeditiously join up on the tanker or other available aircraft and conserve fuel. Depending upon weather at the divert field and fuel state, the pilot may elect to proceed directly to the divert field after having climbed out on the final bearing heading.

ACLS-equipped aircraft shall be alert for data-link displays. Mode II information shall be transmitted to suitably equipped aircraft.

ICLS/JPALS capable aircraft should conform to the NATOPS lost communication procedures utilizing ICLS/JPALS during the recovery phase to intercept the final approach course and glideslope. Under conditions of intermittent or erroneous TACAN/JPALS azimuth information, a 12 nm arc should be flown at an altitude of 3,000 feet. Final bearing will be indicated by the centering of the ICLS/JPALS azimuth needle. When approach to the final bearing is indicated, an immediate turn and landing transition should be completed in the expected direction of the final approach course determined during the arc. Azimuth tracking on the inbound ICLS/JPALS radial to the glideslope (approximately 8 nm) and constant glideslope to ball acquisition can be flown.

WARNING

Extreme care shall be exercised by controllers and pilots using the above procedure. The controller must ensure positive aircraft identification prior to lock-on. The pilot shall cross-check his approach with other available instruments (DME, altimeter, etc.).

Note

- The glideslope information of the ARA-63/ARN-138 should not be used until within 20 degrees of the final bearing because geometric effects of the planar SPN-41 elevation antenna cause erroneous elevation indications.
- An initial turn in the wrong direction upon intercept of the ARA-63/ARN-138 final bearing will result in the glideslope indication continuing to climb and inverse azimuth tracking.

6.4.11.2 Aircraft in Company

An aircraft with navigation and/or communication equipment inoperative in the company of an escort aircraft with navigation and communication equipment in working order will be handled as a single aircraft in the recovery procedure. The escort aircraft becomes the flight leader and will visually communicate with the distressed aircraft in accordance with standard aircraft NATOPS procedures. The distressed aircraft will assume a position on the starboard wing of the lead aircraft. Transition to landing configuration should be made clear of clouds either above or below the overcast as desired. The controller shall be advised when this transition does/will occur, when the lead aircraft has the OLS in sight, he will visually communicate a lead change and break off to the left. The distressed aircraft will continue a visual approach to landing. The escort aircraft will parallel the final bearing course and maintain a position so as to be easily acquired and be rejoined by the distressed aircraft in the event of a bolter or waveoff. Unless otherwise directed, the escort aircraft will repeat the above procedures until the distressed aircraft is recovered and then continue normal procedures for his own recovery. The AN/SPN-46 should be locked onto the lead aircraft regardless if it is an ACLS or JPALS capable aircraft. For ACLS capable aircraft, the final controller should instruct lead aircraft "beacon on," wingman "beacon off," and then select "beacon lock only" on the AN/SPN-46 console. For JPALS capable aircraft, continue the approach using Star Rider.

WARNING

If the address of the escorted aircraft is inserted in the ACLS, the escorted aircraft will receive needle information. When the lead aircraft breaks away on OLS acquisition, this may give the escorted aircraft an erroneous "fly down, fly right" presentation on the needles. The displayed error may become progressively larger as both aircraft close on the ship regardless of the approach actually being flown by the escorted aircraft.

6.4.11.3 Failure of Carrier Navigation Aids/CATCC Radars Prior to Approach

Individual ships should develop special procedures to recover airborne aircraft in the event of a casualty to shipboard air traffic control equipment. Selection of special/alternate approach procedures will be dictated by the availability of suitable navigational equipment aboard escort ships and/or embarked aircraft. Should the use of assist ship navigation equipment or utilization of airborne radar and control become necessary, approach minimums, separation between aircraft, and size of the recovery will be adjusted so as to ensure safety of recovery operations.

6.4.12 Radar Handoff Procedures

Positive radar identification shall be accomplished by the receiving agency prior to transfer of control. Control will be transferred only after the receiving agency has notified the transferring agency that positive radar contact has been established.

6.4.13 Voice Communication Procedures

6.4.13.1 Compulsory Arrival, Marshal, and Approach Voice Reports

1. Entrance into carrier control area — Information required from flight leader (see Paragraph 6.1).
2. Receipt of:

a. Marshal instructions.

b. Type recovery.

c. EAT or Charlie time.

d. Altimeter setting.

3. Entering holding/marshal with altitude, fuel state, and hung/unexpended ordnance (if any).
4. Altitude changes.
5. Commencing approach, with fuel state, altimeter setting.
6. Frequency changes.
7. Platform (jet/turboprop aircraft).
8. "Coupled/manual/needles" for ACLS/JPALS as appropriate and "command control" if Mode I/IA approach.
9. Three miles (helicopters).
10. Ball call report (side number, aircraft type, ball, fuel state, hung ordnance, coupled/uncoupling (if applicable), automatic/manual). If the pilot does not have glideslope reference and/or lineup reference, the appropriate call "Clara", "Clara lineup", "Clara ship" shall replace the ball call.
11. Airborne.
12. Abeam, with fuel state after bolter/waveoff.

6.4.13.2 Phraseology

Standard ATC and precision instrument approach phraseology shall be used with the following exceptions:

1. Fuel state reports (thousands of pounds; for example, "3.5".)
2. Altitude (angels; for example, "1.2".)
3. Heading changes on Case III final approach after lock-on or final radar contact (normally soft headings; for example, "301, right five".)

6.5 RECOVERING FIXED-WING AIRCRAFT

6.5.1 Preparation for Recovery

Preoperational checks of the arresting gear, optical landing aids, and associated equipment are ordinarily completed before the beginning of air operations; therefore, preparation for recovery generally consists of nothing more than manning the necessary stations. Whenever fixed-wing aircraft are airborne, all arresting gear equipment shall be maintained in a ready status unless the commanding officer has granted permission to place specific items of equipment out of commission for maintenance or other reasons.

Fifteen minutes before each scheduled recovery or immediately upon hearing the word passed to prepare to recover aircraft, personnel will man stations and take the following preparatory actions.

The air officer shall perform the following:

1. Confirm the recovery time with CATCC and the bridge.
2. Obtain the expected BRC.
3. Provide CATCC the break time for Case II recoveries or ramp time for Case III recoveries.
4. Monitor/update fuel status of returning aircraft, information on hung or unexpended ordnance, aircraft emergencies, if any, and the current altimeter setting.

5. Confirm with the bridge that the fantail and adjacent sponson(s) are secured during recovery of fixed-wing aircraft.

The ILARTS and ACLS operators shall ensure equipment is turned on and operating.

The PriFly lens operator shall receive permission from the air officer prior to turning on lens.

The recovery equipment controller in PriFly shall perform the following:

1. Ensure all arresting gear engines, the arresting gear deck-edge station, ILARTS room, and lens room are manned and ready to recover aircraft.
2. Report to the air officer when all stations are manned, giving the existing arresting gear engine and lens settings.

The arresting gear officer shall perform the following:

1. Inspect the landing area for loose gear.
2. Ensure all after deck-edge antennas are positioned as required.
3. Check the condition of crossdeck pendants, barrel fittings and wire supports, and ensure retractable sheaves are in the raised position.
4. Ensure all aircraft and mobile equipment parked on the flight deck are inside the safe-parking line.
5. Ensure hook runners and the deck-edge operator are on station.
6. Ensure the ready barricade, including deck ramps, is in a ready status, with a clear route to the area and a tractor with driver is standing by.
7. Ensure waist catapult slot buttons are installed in accordance with current bulletins and ensure the deck status light is operating.
8. Notify PriFly when the deck is ready.

The flight deck officer shall perform the following:

1. Ensure the mobile crane, a forklift, and a tractor are warmed up and that drivers are standing by. Also ensure operationally ready mobile firefighting equipment is manned and that all have clear access to the flight deck.
2. Ensure the crash crew is on station and that directors and plane handlers in sufficient number are standing by.
3. Ensure the flight deck area is clear of all unnecessary personnel.
4. Ensure the flight deck is clear of unnecessary equipment and that all deck hatches in the landing area are closed and properly secured prior to signaling a ready deck forward.
5. Should the senior cognizant LSO determine that obstructions between the LSO platform and the landing area pose a significant risk to recovery operations, the Aircraft Handling Officer, via request from the Air Officer, shall move the obstruction.

The LSO shall perform the following:

1. Conduct a two-way radio check and sound-powered phone checks on appropriate circuits.
2. Check the landing area lights and lens for proper brilliance when turned on and check the cut and waveoff lights for proper operation.
3. Ensure the following distress equipment is available at the LSO platform:
   a. Battery-powered marker.

b. Life preserver ring.

c. Very pistol.

d. Search and rescue sonobuoy.

e. Aldis lamp (night operations only).

The catapult officer shall ensure the following:

1. Catapult shuttles are properly positioned and shuttle cover installed on catapult 3.
2. Track slot seals are in place on bow catapults (except during CARQUALs).
3. Catapult deck gear is clear of landing area.
4. For ships so equipped, waist ICCS is fully lowered.

The weapons officer shall ensure the following:

1. An EOD representative shall be stationed in flight deck control during all operations when aircraft are carrying weapons. Unless assistance is required, EOD personnel should not normally be exposed to the flight deck during launches or recoveries.
2. The EOD officer, Air Gunner, and air wing weapons officer are equipped with an SRC-22 (or equivalent) communication set during launch and recovery operations.

6.5.2 Flight Deck Procedures

For detailed flight deck procedures, refer to CV Flight/Hangar Deck NATOPS Manual (NAVAIR 00-80T-120).

6.5.3 Special Safety Precautions

Observe the following safety precautions.

1. While aircraft are being recovered, no personnel other than those required by this instruction shall be in the catwalks, on the flight deck, or in the arresting gear engine rooms or ILARTS/lens room without the express permission of the air officer.
2. The deck will be considered foul any time unauthorized personnel are in or around aircraft parked adjacent to the landing area.
3. Personnel shall not stand in or otherwise block entrances to the island structure or exits leading off the catwalks.
4. Personnel shall not sit on missile equipment, chocks, deck-edge coaming, or any other object during flight quarters or while aircraft is turning on the flight deck. Personnel should not turn their backs on aircraft landing or taxiing out of the gear.
5. In taxiing aircraft out of the gear, directors must be aware of the activities of the hook runner, tillerbar man, and wing riders.
6. All taxi signals shall be answered promptly and accurately unless the pilot considers that a dangerous situation exists or is developing, in which case he shall stop immediately.
7. If a pilot loses sight of his director, he shall stop immediately. The director shall exercise care to remain in plain view of the pilot at all times.
8. No director shall give signals to a pilot who is being controlled by another director except in an attempt to avert an accident.
9. Personnel having reason to suspect the readiness or condition of any arresting gear engine, crossdeck pendant, or associated equipment shall immediately cause the deck to be fouled by informing the arresting gear officer, deck-edge operator, and the recovery equipment controller in PriFly.

WARNING

If the arresting gear crew is required to enter the landing area during aircraft recovery, a safety person shall be stationed forward of that crew, facing aft, to ensure the arresting gear crew is warned of approaching aircraft in time for them to safely exit the landing area.

10. If, during launch or recovery operations, any part of the aircraft affecting safe recovery (e.g. hook, landing gear) strikes the ramp, aircraft, equipment on deck, or ship's structure other than normal flight deck protrusions (crossdeck pendants, flight deck light covers, ILARTS centerline cameras, PLAT heads, or waist catapult ramp), no further effort shall be made to effect a normal carrier arrestment. A divert or barricade is required in this case.
11. ACLS radar beacon-equipped aircraft parked or taxiing aft of the island shall have the beacon switch in off or standby position during recovery operations. Aircraft preparing for launch shall delay ACLS beacon self-test until forward of the island or airborne.
12. Pyrotechnic devices shall not be used in marking aircraft accident sites to preclude igniting aviation fuel.

To minimize the possibility of an aircraft landing on a foul deck, the following procedures are mandatory.

1. The lens (and at night, the landing area lights) shall never be turned on without the express permission of the air officer.
2. Except for the purpose of conducting tests, neither the lens nor the landing area lights shall be turned on until the controlling LSO establishes positive communications with the air officer.
3. The waveoff lights shall be continuously activated anytime the lens or landing area lights are turned on and the LSO is not on the platform.
4. Aircraft shall be permitted to conduct practice CCA approaches, including PALS approaches. When the OLS is on and deck lights (night only) are on, PriFly and the LSO platform shall be manned by qualified personnel while underway. As an exception during PALS certification and with no intent to land, PALS approaches may be conducted with the OLS on and without the LSO platform manned. PriFly shall be manned and maintain communications with the aircraft; assigned minimums shall be no lower than 200 feet and one-half mile. With OLS and deck lights (night only) off, the LSO platform need not be manned. CATCC shall not assign minimums lower than 500 feet and 1 mile. In all cases, CATCC will issue, “This is a practice approach to a low approach only. Upon reaching (minimums), execute waveoff.”
5. To avoid unnecessary delay in recovering the first aircraft, the lens and/or landing area lights may sometimes be turned on a short time before the ship is completely ready to commence recoveries. When this is done, the LSO shall wave off approaching aircraft at a distance of one-half mile or greater if he has not received the “clear deck” signal.
6. During instrument recoveries, PriFly will keep CATCC advised as to the status of the deck and provide the estimated time the deck will be clear. CATCC shall keep PriFly advised as to the type and position of the nearest aircraft.
7. Combat and CATCC must keep PriFly informed of any aircraft known or suspected to have radio failure.
8. After calling “ball,” if no verbal/visual acknowledgment of positive control by the LSO is received, the pilot shall execute his own waveoff early enough to clear the landing area by 100 feet above flight deck level.

The deck is foul when any of the following conditions exist:

1. The red rotating beacon is on.
2. Personnel, aircraft, support equipment, or loose gear are in the landing area.

3. Arresting gear engines are not properly set and in battery.
4. There is a known or suspected malfunction of launch or recovery equipment.
5. After each touch and go, arrestment, bolter, or waveoff.

Note

During night operations when the deck is open, but momentarily foul, the landing deck lights will remain on and foul deck waveoff will be controlled by the LSO.

During night operations, green wands shall be used only by those air department personnel authorized to launch aircraft or signal a clear deck.

6.5.4 Control of the VFR Day Fixed Wing Carrier Landing Pattern

During VMC, the air officer is charged with the overall control of the VFR day fixed wing carrier landing pattern (Figure 6-1) and is assisted by the LSO. Specific responsibilities are assigned as follows.

6.5.4.1 Air Officer

1. Provide pilot with sufficient information to ensure that aircraft are established in the landing pattern in time to meet the expected Charlie time.
2. Assign or revise the landing order as necessary.
3. Regulate the number of aircraft in the landing pattern to ensure a steady flow of traffic while preventing the pattern from becoming extended or overcrowded.
4. Monitor the landing interval.
5. Whenever possible, maintain visual contact with all aircraft in the Charlie pattern.
6. Maintain an accurate count of the number of aircraft to be recovered and inform the bridge when only two remain.
7. Monitor the upwind pattern, being particularly alert to warn pilots of aircraft boltering or waving off of their proximity to aircraft launching or breaking.
8. Maintain visual contact with aircraft that have radio failure and instruct the LSO with regard to visual signals to be given.
9. Inform the LSO of any unusual condition(s) affecting the normal recovery of aircraft.

6.5.4.2 LSO (Under the Supervision of the Air Officer)

1. Control all fixed-wing aircraft approaches after the 180 degrees position.
2. Ensure that approaching aircraft are properly configured.
3. Monitor the operation of the OLS and cross check the approach radar/ICLS glidepath angle.
4. Instruct and supervise the LSO talker and hook spotter.
5. Assist in controlling aircraft that have radio failure by flashing the cut or waveoff lights in accordance with signals delineated in Figure 6-9.
6. Whenever possible, maintain visual contact with all aircraft in the Charlie pattern.
7. Inform the air officer of any unusual conditions affecting the safe recovery of aircraft.

CAUTION

- Recovery of FW aircraft under low recovery headwind conditions may result in unsafe deviations and/or increased bolters. Consideration should be given to moving out the wave off window if recovering aircraft with recovery headwind significantly lower than optimum.
- The LSO shall immediately inform the air officer of any adverse wind conditions unsafe to aircraft recovery, and the air officer shall inform the LSO of downwind recovery situations. EMCOM conditions permitting, pilots shall be advised of adverse wind conditions or downwind recoveries.

Note

Optimum recovery headwind (RHW) is 25 to 30 knots. RHW should be maintained as close as possible to the optimum velocity and the centerline of the landing area. Additional RHW information is contained in the Aircraft Recovery Bulletins.

6.6 SPECIAL PROCEDURES FOR CARRIER QUALIFICATION LANDING

6.6.1 Fixed-Wing Aircraft

The number of aircraft in the Case I or II pattern should be limited to four and shall not exceed six.

While there are no specified limitations for Case III, more than six aircraft in the pattern may result in an extended landing pattern, excessive fuel consumption, and increased frequency congestion. Additional aircraft should remain on deck or sent to marshal.

Maintaining a proper and uniform interval is very important in the CARQUAL pattern. The air operations officer and the air officer shall make appropriate recommendations. Jet/turboprop aircraft night CARQUALs shall be under CATCC control. Advisory control may be specified by the ship's commanding officer when weather permits.

WARNING

- The air officer must be acutely aware of the responsibility to ensure the initial separation between bolter/waveoff and departing aircraft during CARQUAL and cat-trap-cat evolutions.
- If all shipboard radar sensors are not operational, CATCC's radar coverage may be restricted (blindspot) ahead of the ship, requiring aircrew to exercise good lookout doctrine and radio discipline upon departure.

During night CARQUALs, CATCC shall utilize a single frequency to control all aircraft in the CARQUAL pattern.

Anytime CARQUAL or refresher landings are being conducted, a senior representative of each squadron involved should be present in the tower. During IMC and night operations, his station will be in air operations. He must be well qualified in the aircraft and prepared to advise the air officer in the event of an emergency.

It is the responsibility of the air operations officer to keep the air officer accurately apprised of the number of landings required for each aircraft. Air operations/ CATCC will maintain a status board that will show landings required, landings completed, and location of each aircraft (in Delta, in the Charlie pattern, or on the deck).

The air operations officer is responsible for providing the air officer with accurate bingo/divert data. Before commencing and/or during CARQUALs, he shall compute the distance and bearing to the bingo/divert field and the fuel required for the model aircraft involved. Bingo/divert data will be broadcast on the recovery frequency by PriFly or CATCC as appropriate.

The decision to divert aircraft will be made by the commanding officer or his designated representative. The air operations officer and the air officer shall make appropriate recommendations during IMC/night and VMC operations, respectively. In addition, the LSO will make timely divert recommendations to the air officer based on unsatisfactory pilot performance or unsatisfactory CARQUAL conditions around the ship. It is the pilot's responsibility to inform the tower if he reaches bingo fuel state and has not been ordered to divert.

Changing pilots when an aircraft is on the flight deck with engine(s) running is an inherently dangerous practice requiring extreme care. When a change is made, the aircraft shall be chocked and have at least the initial tiedowns attached. Pilots shall not leave/switch their seats until given the “tiedowns in place” signal by the aircraft director.

Note

It is the pilot's responsibility to inform the tower when reaching holddown fuel state after trapping and the aircraft has not been taxied to a refueling spot.

6.7 EMERGENCY LANDING

6.7.1 Fixed-Wing Aircraft

At first indication of a possible emergency landing, the air officer will pass the word “stand by to make a ready deck.” At this time, arresting gear and Crash Salvage personnel, ILARTS, and lens operators will immediately man their stations. It is the responsibility of PriFly to contact the LSO, who will proceed to the platform. The squadron duty officer will be notified. Tractors will be attached to all aircraft parked in the landing area, tiedowns will be removed when directed by the plane directors, and directors and chock men will stand by. A helicopter should be manned and started unless an airborne helicopter is available for plane guard. If the emergency condition requires a straight-in approach or a straight-in approach is contemplated, the SPN-41 shall immediately be activated without pilot request.

When it has been determined that an emergency landing will be made, the Air Officer will pass the word, “Make a ready deck,” at which time the landing area will be cleared as expeditiously as safety permits. Personnel concerned will stand by to rig the barricade if called for. The air officer shall pass an expected Charlie time to the distressed aircraft.

Pilots of aircraft returning to the ship for an emergency landing shall not shift from the control frequency to tower frequency until directed to do so unless radio contact has been lost on the control frequency. Normally, the tower and LSO will shift to the control frequency, thereby avoiding the necessity of a frequency change by the pilot. In no case will the pilot of an aircraft in distress leave an assigned frequency without broadcasting the frequency to which he is shifting.

Aircraft returning to the ship with an emergency should be directed to the Bullpen or to a specific altitude and fix directed by PriFly. Bullpen is defined as a point 10 nm aft of the carrier on extended BRC at 1,200 feet in a left-hand holding pattern.

As the ship is being prepared for the landing of aircraft, the air officer will pass as much pertinent information as possible to the flight deck, bridge, LSO, and CATCC. The air officer shall determine the amount and type of firefighting equipment to be broken out and direct the deployment of personnel, depending upon the nature and seriousness of the emergency.

6.8 EMERGENCY SIGNALS

6.8.1 Visual Signals to Ship From Aircraft With Radio Failure

Figure 6-6 provides visual signals to be used in the event of radio failure. Aircraft configuration is the primary daytime indicator of the pilot's desires or intentions. At night, aircraft lighting configuration is the primary indicator of the pilot's desires or intentions.

6.8.2 Visual Signals to Aircraft From Ship Under EMCON or Lost Communication Conditions

Figure 6-7 provides visual signals for giving commands or advisories to aircraft when the ship has lost its communication capability or is under EMCON conditions.

6.8.3 Carrier Pattern Emergencies

The LSO will make appropriate recommendations to the air officer or pilot as indicated in Figure 6-8.

6.8.4 Day Communication Emergencies

Figure 6-9 describes appropriate action for day communication emergencies.

6.8.5 Night Communication Emergencies

Figure 6-10 describes appropriate action for night communication emergencies.

6.9 TANKER OPERATIONS

Tankers assigned duties in support of the recovery of aircraft shall use the following procedures:

1. Tankers that have a known good store and sufficient fuel to meet receiver fuel requirements shall display the appropriate tanker strobe pattern.
2. For optimum utilization of tankers, single-cycle operation is recommended.
3. A specific existing agency (i.e., departure control) shall be designated tanker control with the responsibility to monitor:
   a. Tanker give-away fuel status.
   b. Tanker location.
   c. Location and fuel requirements of the low state aircraft.
   d. Coordination of the tanker and receiver rendezvous.

6.9.1 Recovery Tanker Procedures

6.9.1.1 CASE I/II

After launch, the oncoming recovery tanker shall switch to departure control for assignment. All tanker packages should be checked as soon as possible after launch. When it has been determined that the new tanker store is operational, departure control should be advised immediately. The recovery tanker shall maintain a rendezvous circle oriented on the CV (Figure 6-11). The rendezvous circle shall contain four reference points. Minimum pattern altitude shall be 1,500 feet. This pattern is a left-hand circle within 5 nm of the CV during launch and recovery operations. When the last jet is aboard, the tanker shall climb to prebriefed altitude and switch to assigned frequency for control.

6.9.1.2 Case III

The recovery tanker pattern shall be assigned by departure control. It shall be at least 1,000 feet above the overcast or VMC between layers, but not less than 2,500 feet MSL. The tanker pilot shall advise departure control of the best altitude and position to conduct emergency tanking. Positive control shall be provided for tanker overcast penetrations. Departure control shall assist in positioning the tanker near a potential receiver and shall keep the tanker informed of the potential receiver's position.

Note

Tanking shall not be attempted below 1,500 feet during Case I/II and 2,500 feet during Case III.

6.9.2 Rendezvous Procedures

6.9.2.1 Rendezvous (Day and Night)

When directed to “hawk” (closely monitor) a particular aircraft that is a potential receiver, the tanker pilot should position the tanker to be at the 2-o'clock position of the low-state aircraft as it bolters or waves off. The minimum altitude for rendezvous shall be 1,500 feet day, 2,500 feet night, ensuring a minimum of 500 feet vertical separation between receiver and tanker aircraft until visual separation can be maintained. When directed, the tanker shall switch to the potential receiver aircraft's frequency. If visual contact is not acquired, the controlling agency shall provide assistance until visual contact is established. The receiver should generally make the final rendezvous on the tanker. Positive radio communications must be established if the tanker will be rendezvousing on the receiver at night. The tanker should stream the drogue as the receiver joins, thus expediting plug-in.

In the case of a NORDO low state aircraft, clearance to engage the basket will be given by a tanker lights flash. The tanker should stream the drogue as the receiver joins, thus expediting plug-in. The tanker pilot shall report to tanker control the following:

1. When the receiver is taking on fuel.
2. When refueling has been completed, the amount of fuel transferred, and update give-away.

6.9.2.2 Rendezvous High/On Top (Day and Night)

Departure control shall provide positive control until visual contact is established. The receiver shall make the final rendezvous on the tanker and report as previously described.

Figure 6-6. Emergency Signals to Ship From Fixed-Wing Aircraft With Radio Failure

PILOT'S DESIRES OR INTENTIONS	VISUAL SIGNAL
1. I desire immediate landing.	Fly up the port side of the ship, low and close aboard, rocking wings, in a landing configuration with hook down. Navigation lights bright and steady with anticollision light on. If turning final in VFR pattern or approaching final on a CCA, momentarily turn on the taxi light, if available.
2. I desire to land but can wait for the next recovery.	Fly up the port side with the landing gear up, hook down, navigation lights bright and steady, and anticollision light off while abeam the ship.
3. I am proceeding to the bingo field.	Fly up the port side of the ship, rocking wings, with landing gear and hook up, navigation lights bright and steady, and anticollision light on. If fuel state and nature of the emergency permit, continue making passes until joined by a wingman. Upon reaching bingo fuel state, proceed alone, setting IFF/SIF to emergency when departing.

NOTE:
1. The requirement for gear down and rocking wings as the signal for an immediate landing is not required when considered unsafe by the pilot due to the nature of the emergency; for example, loss of an engine in multi-engine aircraft.
2. At night, aircraft flying close aboard the port side of the ship without lights are considered to have an emergency requiring immediate landing.

Figure 6-7. Visual Signals to Aircraft From Ship Under EMCON or Lost Communications

COMMAND/ADVISORY	SIGNAL		
	OLS	ALDIS LAMP[2]	FLASHING LIGHT
1, BINGO[1] — Proceed to alternate landing field.	Flashing cut and waveoff lights.	Flashing red light.	M, M — —, — —
2. Add power — (Jets and turbo props only).	Flash, cut lights.	N/A	N/A
3. CHARLIE — Cleared to land aboard.	N/A	Steady green light.[3]	C — • — •
4. DELTA — Delay in landing. Enter DELTA pattern and maintain visual contact with the ship.	Flashing landing area lights.	Steady red light.	D — • •
5. Closed deck. Do not land.	Landing area lights off (night only).	N/A	N/A
6. Do not land. Ditch or bail out/eject in the vicinity of the ship.	N/A	Z — — • •	Z — — • •
7. LSO has control of the aircraft on final approach at approximately 1-1/2 miles.	Steady (3 sec), cut lights.	N/A	N/A
8. Lower hook.	N/A	H • • • •	H • • • •
9. Lower wheels.	N/A	W • — —	W • — —
10. Lower flaps.	N/A	F • • — •	F • • — •
11. Jettison disposable fuel tank.	N/A	G — — •	G — — •
12. Jettison ordnance.	N/A	Q — — • —	Q — — • —

NOTES:
1. Signal is given only when ordered by the Air Officer.
2. Aldis lamps may be located in the tower, or on the signal bridge.
3. Helicopters will normally receive this signal from the rotating beacon or Aldis lamp on the starboard side of the island.

WARNING

Extra care must be exercised in identifying the correct light and location of signal. Misinterpretation of the lighting signals from other sources can occur. Such sources are rotating beacons (aft, port, forward sides of island), or deck status lights (located at LSO platform and near portside midships catwalk).

Figure 6-8. Carrier Pattern Emergencies

EMERGENCY	CARQUALS	DEPLOYED/REFRESHER
1. Landing aids malfunction, under steady deck conditions, due to improper stabilization.	Discontinue landings.	Rig MOVLAS and continue recovery with radio as backup.
2. Complete landing aids failure/damage.	Discontinue landings.	If available, consider the use of an emergency field. If none is available and aircraft fuel state does not permit delay: 1. Establish positive radio contact with each aircraft when commencing approach. 2. Use radio talk-down as primary control. 3. Have flare gun ready for instantaneous use.
3. Partial failure or damage of OLS, datum lights operative.	Discontinue landings.	Rig MOVLAS and continue recovery, with radio as backup.
4. Waveoff lights inoperative.	Discontinue landings.	Continue landings with radio as primary means of waveoff. Have flare gun ready for instantaneous use as a backup.
5. Suspected malfunction, when consecutive approaches result in below glidepath conditions.	Discontinue landings until a thorough check of OLS settings and monitoring equipment is accomplished.	Rig MOVLAS and continue recovery with radio as backup. A complete check of the OLS settings and monitoring equipment will be made upon completion of recovery.
6. Aircraft at night, no approach light.	Aircraft without an approach light shall be waved off for visual check of the landing gear and hook.[1]	Same as for CARQUALs.
7. Any part of the aircraft striking the ramp or ship's structure other than the normal flight deck protrusions (crossdeck pendant, flight deck light covers, ILARTS head, waist catapult ramp).	Do not attempt normal arrestment.	Same as for CARQUALs.
8. Tanker drogue extended (guillotine inoperative).		Divert if suitable field available. If situation prevents divert, jettison external store. If divert not feasible or jettison unsuccessful, utilize normal arrest landing procedures.

NOTE:
1. Verbal confirmation of “gear down and locked” may be substituted for an approach light.

Figure 6-9. Day Communication Emergencies

EMERGENCY	CARQUALS	DEPLOYED/REFRESHER
1. Loss of LSO radios.	Discontinue landings. Advise air officer to initiate DELTA or bingo instructions, as appropriate.	Pri-Fly notify aircraft in pattern that LSO radio is out, and transmit “Waveoff” if LSO uses waveoff lights.
2. Loss of all ship's radios.	Discontinue landings. Use visual signals on OLS or from the LSO platform to DELTA or bingo, as appropriate.	Continue landings at discretion of the OTC.
3. Loss of aircraft radios.	With receivers: 1. Pilots shall be given landing instructions and aircraft shall remain aboard when arrested. 2. Pri-Fly shall transmit bingo fuel states each time the aircraft approaches abeam. Pilot shall acknowledge by rocking wings. 3. If unable to get aboard, pilot shall bingo when fuel state dictates. Another aircraft should be designated as an escort. With no receiver, aircraft should not be diverted.	With or without receiver, make normal approach and landing.
Note Information and instructions should be transmitted to NORDO aircraft on control frequencies and guard.		

Figure 6-10. Night Communication Emergencies

EMERGENCY	CARQUALS	DEPLOYED/REFRESHER
1. Loss of LSO radios.	Discontinue landings. Give DELTA or bingo instructions, as appropriate.	The LSO shall inform CATCC, via sound-powered phone, of the radio failure. The LSO shall accept control of each aircraft from CATCC, via sound-powered phone, as the aircraft reaches approximate meatball acquisition position. At this time CATCC shall transmit to the pilot of each aircraft that the LSO has assumed control of the approach.
2. Loss of all ship's radios.	Discontinue landings. The flight leader of each unit airborne should organize a flight of his unit members and proceed to divert field.	Continue final landings or bingo at the discretion of the OTC. Use standard visual signals on the OLS, or from the LSO platform, or from PriFly, as appropriate.
3. Loss of aircraft radios.	With receivers: 1. Pilot shall be given landing instructions and aircraft shall remain aboard when arrested. 2. CATCC shall transmit bingo fuel state each time the aircraft commences approach. 3. If unable to get aboard, pilot shall bingo when fuel state dictates. Another aircraft should be designated as an escort. With no receiver, aircraft should be diverted.	With escort: 1. Lead pilot calls “Ball” and receives normal reply from the LSO. 2. After receiving acknowledgment, lead pilot makes the appropriate light signal, breaks off to the left, then parallels the final bearing, allowing the no-radio aircraft to continue approach visually. The no-radio aircraft shall receive cut lights from the LSO following breakaway. 3. Lead pilot shall be in a position to be rejoined by the no-radio aircraft in the event of a bolter or waveoff. With no escort: 1. Pilot makes the approach with lights as indicated in Figure 6-7 and Figure 6-8. 2. Pilot squawks the appropriate code on IFF/SIF.
		With no escort (CONT): 3. LSO shall acknowledge positive control of the no-radio aircraft by the cut light signal. An aircraft with transmitter only receives the same acknowledgment as the no-radio aircraft. 4. Pilot shall execute his own waveoff without acknowledgment.

Figure 6-10. Night Communication Emergencies (cont.)

EMERGENCY	CARQUALS	DEPLOYED/REFRESHER
		Without escort and external lights: 1. Pilot shall squawk the appropriate mode IFF/SIF and commence a normal approach, but shall not land without visual acknowledgment by the LSO. 2. If visual acknowledgment is not received, pilot shall execute a normal waveoff into the bolter pattern, except priority in the pattern and visual acknowledgment on the next approach. 3. Cut lights when used as an acknowledgment signal shall be given as near the normal meatball reporting position as possible.

Figure 6-10. Night Communication Emergencies (cont.)

EMERGENCY	CARQUALS	DEPLOYED/REFRESHER
4. Complete electrical failure.		1. If the carrier can be sighted and a safe descent and landing approach made, fuel permitting, orbit keeping the carrier in sight and descend so as to be at the ship during the scheduled recovery and/or descend and fly by ship giving appropriate emergency signal (Figure 6-7 to Figure 6-9). 2. If the carrier cannot be located, the pilot should DR navigate to the prebriefed “emergency sector/radial” and hold. If not joined by or unable to join on any escort aircraft, upon reaching bingo fuel, divert to bingo field if available. 3. If no bingo field is available, commence DR descent/penetration to ship at approximate approach time, weather and common sense permitting. If after descent ship is not sighted, commence square search if practical. 4. If the carrier or potential rescue ship is not sighted or if the aircraft/weather combination precludes a descent, take DR heading to nearest land. If land is reached, hold at recommended ejection/bailout altitude and continue watching for escort; when fuel nears exhaustion, make controlled ejection/bailout.
Note Information and instructions should be transmitted to NORDO aircraft on control frequencies and guard.		

Figure 6-11. Tanker Rendezvous Pattern

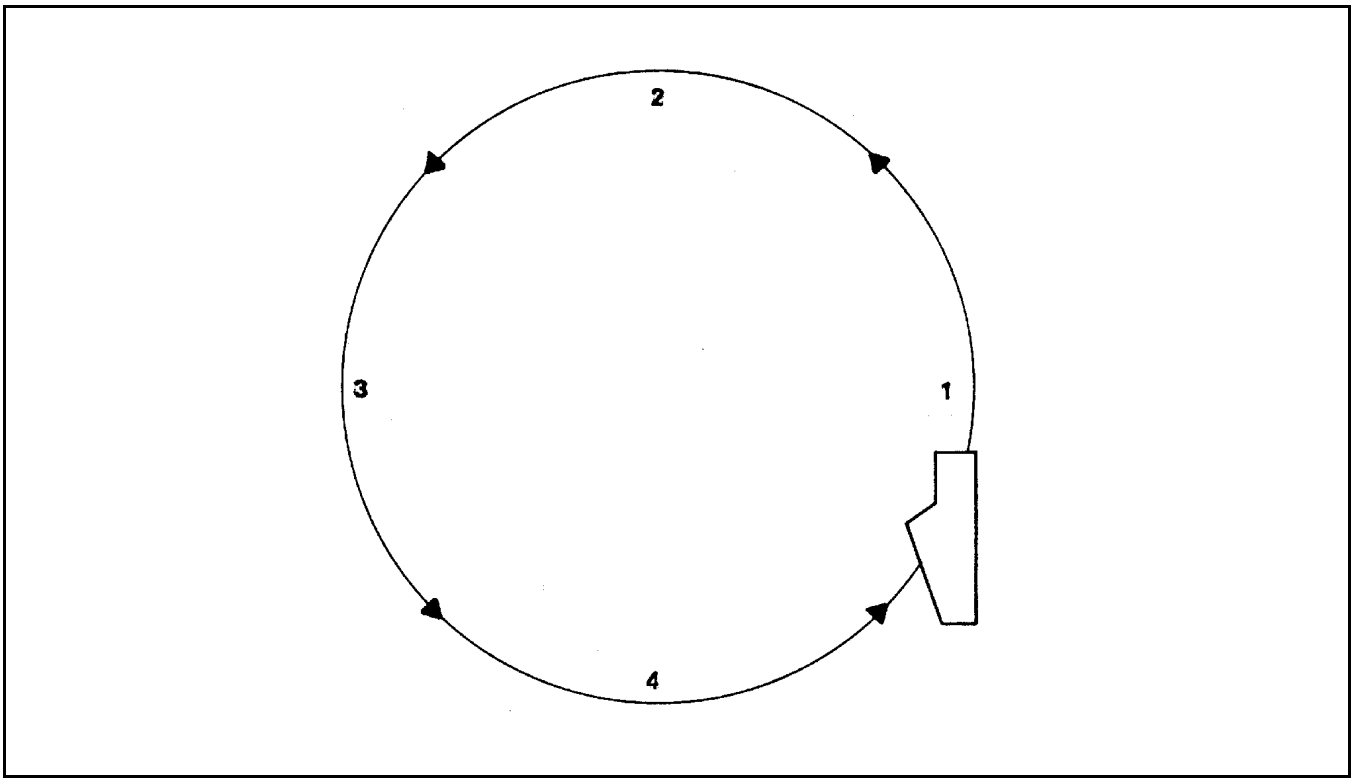

6.9.3 Recovery Tanking Pattern

After the receiver is engaged, the tanker aircraft shall establish a racetrack pattern in the vicinity of the ship. Unless special circumstances exist, the tanker should not proceed more than 10 miles ahead of the ship. The downwind leg should be 3 to 5 miles abeam and tanking should be completed prior to reaching a point 6 miles astern to allow for proper pattern entry. If tanking is done above an overcast, departure control may direct adjustment of the pattern so as to allow for normal descent and handoff to approach control.

6.9.4 Recovery (Case III)

The desire to expedite tanker recovery shall not jeopardize flight safety. The recovery tanker shall be under positive control unless executing an instrument approach (CV-1/CV-2) or operating under night EMCON conditions. The aircraft shall be level at 1,200 feet prior to the turn to final bearing. The recovery tanker shall be vectored to intercept final bearing once the pilot reports ready to come aboard; however, shall not intercept final bearing closer than 4 nm.

6.9.5 Fuel Transfer and Dump Control

Each ship/air wing shall promulgate supplementary instructions that shall include the following instructions.

1. Bingo data for all embarked aircraft.
2. Low state figures (i.e., state at which aircraft will normally be ordered to tank) and amount of fuel to be transferred to each type aircraft when no divert field is available.
3. Procedures for control of tanker fuel by CATCC.
4. Minimum fuel for barricade engagement.

Except in an emergency, tankers shall obtain clearance from departure control before transferring or dumping fuel. Departure control shall be advised of any changes of tanker fuel state and give-away as appropriate.

WARNING

- Shipboard recovery of a tanker aircraft with an extended hose presents a missile hazard that may be caused by shattering of the drogue/basket as it strikes the ramp area. Prior to recovery, the flight deck should be cleared of all but required recovery personnel. Only the controlling LSO should remain on the platform, and he should utilize the safety net as the aircraft crosses the ramp. If possible, aircraft adjacent to the landing area should be respotted forward or struck below to the hangar deck.
- Even though the probability of damage to the aircraft by drogue/basket slap during a bolter is slight, the pilot should be aware of this possibility.

6.10 DIVERSION OF AIRCRAFT

The air operations officer or the air officer shall normally be responsible for making the recommendation to the commanding officer as to which aircraft should be diverted in the interest of flight safety. The air operations officer shall, if practicable, determine the condition of the navigation, communication, and lighting facilities of divert field prior to the first Case III recovery. The following factors shall be considered when anticipating a divert:

1. Aircraft fuel state.
2. Bearing and distance of field.
3. Weather at divert field, current and forecast.
4. En route upper level winds.
5. Suitability of field for type of aircraft.
6. Navigational assistance available.
7. Aircraft mechanical condition.
8. Ordnance restrictions.
9. Condition of carrier deck.
10. Availability of tankers.
11. Pilot performance.

CATCC/CDC shall be alerted to the impending divert of an aircraft or group of aircraft and shall take control of the aircraft when diverted. CDC shall also ensure the ship's lookouts are alerted to the forthcoming divert, model aircraft, side number, and on what relative bearing the aircraft is expected to depart the ship.

If the tanker refueling hose cannot be retracted, the hose shall be guillotined prior to recovery. If the hose fails to separate, the aircraft shall be diverted to a suitable landing field. When the situation prevents an aircraft divert and it is equipped with an external refueling store, the store shall be jettisoned prior to attempting a carrier landing. If the hose cannot be guillotined and/or the refueling store jettisoned, normal arrested landing procedures shall be utilized.

When it is determined to divert an aircraft, approach control shall notify the pilot by passing the following information only: “(call sign) signal divert/bingo, (name of field) passing angles 2.5 go button (XX).” After the switch to departure control once above 2,500 feet, the pilot shall be advised to check gear up/hook up and also have information relayed regarding the magnetic heading and the distance to the divert field. A readback of diverting instructions from the pilot or flight leader is mandatory on departure frequency. While under positive control and en route to the divert airfield, any additional information available shall be provided the pilot concerning latest en route and field weather, squawk, altimeter setting, and position from which divert is being initiated. If operating outside an ADIZ boundary, the CDC controller shall provide the pilot with the necessary ADIZ information. The appropriate Air Defense Sector shall be advised of the diverted aircraft's departure point, ADIZ penetration point, time of penetration, altitude,

ETE, destination, and any additional information that may be pertinent to safety of flight. The CDC controller shall maintain a radar plot and radio monitor on all diverted aircraft as long as possible and retain responsibility for the aircraft until positive radar handoff to FACSFAC/ARTCC or other appropriate controlling agency.

Under IMC, the aircraft shall be instructed to shift to the appropriate airspace controlling agency (FAA or other) frequency after the additional divert information has been received. Once communications have been established with this controlling agency, the flight plan particulars shall be furnished, including the ADIZ penetration information for relay to an air defense sector. The aircraft will receive a clearance. If communications cannot be established, as is often the case, the pilot should file using GCI Common.

The air operations officer shall ensure a divert flight plan is transmitted to the appropriate divert airfield and similar information to the pertinent air defense system agency should an ADIZ penetration be involved; he is also responsible for receipt of an arrival report on the diverted aircraft. The pilot shall ensure an arrival report is transmitted immediately upon landing via the most expeditious means (i.e., POTS, HF/UHF radio, INMARSAT, immediate message, etc.).

Squadron or unit commanders and the air operations officer are jointly responsible for ensure aircraft performance data pertinent to divert is available to and understood by air control personnel.

CHAPTER 7

Weapons Handling Procedures

7.1 WEAPON HANDLING PROCEDURES

Airborne weapon handling evolutions introduce a degree of risk in carrier operations that requires careful planning and preparation. The necessity to train for and to conduct combat operations requires the acceptance of certain risks that cannot be avoided in the handling of explosive weapons. Commanding officers shall continually weigh the requirement to perform each weapon evolution against the additional risk that is being interjected and accept only those evolutions in which the need clearly outweighs the risk. The Air Gunner/CVW Ordnance Officer shall ensure adequate ordnance supervision is maintained during all flight deck ordnance handling evolutions.

WARNING

Prior to the execution of any drill, specific consideration shall be given to ensure the drill (scheduled or unscheduled) will not compromise ordnance handling safety.

Note

- During all ordnance handling evolutions above the second deck, compliance with the AFFF system and mobile firefighting equipment information in NAVAIR 00-80R-14 is mandatory.
- During ammunition replenishments, the application of electrical power for aircraft maintenance is authorized, provided electrical power is applied in accordance with the existing model MIMs and electrical power cables do not obstruct the movement of ammunition.
- Announced drills shall not be conducted during ammunition replenishment.

7.1.1 Weapon Definitions

1. Airborne stores — Tanks (fuel and spray), pods (refueling, photo, ECM, and so forth), nonexpendable training weapons, targets, and all similar items intended for carriage internally or externally by aircraft, including the racks, launchers, adapters, and detachable pylons used for such carriage. This definition applies to items that are not normally separated from the aircraft in flight.
2. Airborne weapons — All missiles, rockets, bombs, mines, torpedoes, pyrotechnics, ammunition, guns and gun pods, and all similar items intended for carriage internally or externally by aircraft. This definition applies to items that are normally separated from the aircraft in flight.
3. Arming — An operation whereby a weapon is changed from a safe condition to a state of readiness for initiation.
4. Arming area — That area where forward firing ordnance is changed from a safe condition to a state of readiness. All arming evolutions required to be accomplished in the arming area by the aircraft store loading manual/checklist shall be performed in this area. Before arming commences and until aircraft launch, the area in front of and behind the aircraft (forward of the raised JBD) shall remain clear.
5. Dearming area — That area where forward firing ordnance is changed from a state of readiness to a safe condition. All dearming evolutions required to be conducted in the dearming area by the individual store loading manual/checklist will be conducted in this area. The area ahead of and behind the aircraft must be

kept clear until safing is completed. When taxiing aircraft from the landing area to the dearming area, care must be taken to minimize exposure of the armed forward firing ordnance to personnel and equipment.

6. Downloading — An operation that removes airborne weapons/stores from an aircraft.
7. Hung weapons — Those weapons or airborne stores on an aircraft that the pilot has attempted to drop or fire in flight but could not be fired or dropped because of a malfunction of the weapon, rack/launcher, or aircraft release and control system.
8. Harpoon/SLAM/JSOW weapon — A weapon, such as Harpoon or SLAM, for which an intent to launch signal has been initiated and whose launch has subsequently been aborted by the aircrew or failed prior to separation of the weapon from the aircraft.
9. Loading (rearming) — An operation that installs airborne weapons/stores on or in an aircraft.
10. Rearming area — That area where an operation is conducted that replenishes prescribed airborne weapons in/on an aircraft or where final dearming is accomplished following recovery and engine shutdown or following ground abort. Only loading, downloading, arming, and dearming authorized to be conducted in the rearming area by the individual store loading manual may be conducted in this area. All weapons handled or loaded in the rearm area shall be safe and remain safe.
11. Safing (dearming) — An operation whereby a weapon is changed from the state of readiness for initiation to a safe condition.
12. Unexpended weapons — Weapons that have not been subjected to attempts to fire or drop. They are presumed to be in a normal operating condition and can be fired or jettisoned if necessary.

7.1.2 Weapon Movement

The presence of airborne weapons outside of designated magazines greatly increases the danger to the carrier should a fire or explosion occur. The greater the quantities of weapons involved, the greater the risk. To minimize this risk, only that quantity of weapons required to sustain operations shall be transferred to the hangar or flight deck.

With exception to actual loading evolutions, weapons on skids/trucks shall be positioned fore and aft and continuously attended.

Airborne weapons shall be positioned in such areas as to be readily available to afford adequate time for safe aircraft loading. Staging areas for assembled weapons shall be restricted to those areas that:

1. Are convenient to jettison locations.
2. Have at least two clear routes of access.
3. Are covered by sprinkler system or manned firehoses.
4. Are located as far as practicable from fueling stations and LOX carts.
5. Are manned and have provisions for physically securing weapons.

The priorities that shall be utilized in locating staging areas for weapons include the following:

1. Flight deck outboard of island.
2. Hangar deck.
3. Sponsons.

Staging areas shall be used for ready service only, not for protracted stowage nor for extending the total weapons stowage capacity of the ship. All weapons in staging areas shall be on mobile trucks/skids.

All ordnance jettison ramps will be exercised daily prior to flight operations involving ordnance. Jettison ramps in the ordnance staging area will be rigged at all times that ordnance is present. All other ramps will be rigged when required as determined by the Air Gunner.

The aircraft elevators may be used to supplement and expedite transfer of weapons from the hangar deck to the flight deck. Coordination between the ordnance handling officer and the aircraft handling officer is necessary.

7.1.3 Weapon Loading/Downloading

Guidance for weapon loading/strikedown/downloading is provided in Appendix A.

Compliance with the weapon requirements contained in the ordnance load plan demands close coordination between the aircraft handling group, ship's ordnance group, and air wing ordnance personnel. The Air Gunner shall maintain a status board that confirms type, quantity, and location of all weapons on the flight deck and/or aircraft. It is of particular importance that the aircraft handling officer be apprised of any peculiarities in configuration or status that may make certain aircraft unassignable for particular types of weapon loading.

The aircraft handling officer shall designate the aircraft to be loaded after coordination with squadron maintenance representatives. He shall provide ordnance personnel with the planned deck spot as early as possible to afford adequate time for required configurations and the performance of aircraft release and control system checks.

Simultaneous fueling, loading, and downloading of weapons, preloaded IMERs/ITERs, “PASE” weapons, and installation of fuzes and arming wires is authorized.

1. Loading/downloading and oxygen servicing, other than converter replacement at the aircraft, shall be conducted as separate evolutions.
2. Refueling hoses shall not be connected to an aircraft which is undergoing the Loading/Downloading of ordnance that require electrical connections to make contact (i.e., AIM-9/LAU-7) during the evolution.
3. Loading of weapons that do not require an electrical contact (i.e. AGM-65, AIM-9/LAU-127, AIM-120, 20MM) during the process of loading is authorized while fueling.
4. No electrical connections (i.e. installation/removal of umbilical cables, mating/unmating of buffer/mid-body connector, loading/downloading AIM-9/LAU-7) to weapon/AAS or installation/removal of impulse cartridges shall be accomplished while fueling of the aircraft is in progress.
5. Fuel hoses shall not be positioned under weapons being loaded/downloaded.
6. When electrical storms are within a 5-nautical mile radius of the ship, ammunition and explosives operations in exposed locations shall be halted. Exception: if aircraft recovery operations are in progress during storm conditions, dearming of forward firing weapons on recovered aircraft will continue until recovery operations are complete. Ammunition or explosives with exposed electro explosive devices (EEDs) shall then be struck below decks. Ordnance testing is not authorized in any ship location when electrical storms are within 5 nautical miles of the ship. Operations shall not resume until the storms are outside the 5-nautical mile radius. Loading or offloading ammunition or explosives during high winds or rain is at the discretion of the Commanding Officer.

When required, electrical power may be applied during the aircraft loading/downloading evolution but will be held to a minimum consistent with operational commitments. Electrical power to the armament or weapon release and control circuitry shall not be applied while weapons are being loaded/downloaded.

The flight deck is always the preferred area to load aircraft. Loading is permitted while recovery of aircraft is in progress. However, all efforts shall be made to ensure the movement of ordnance does not impede the safe and efficient recovery and movement of aircraft. In any event, only the minimum quantity of weapons required shall be moved toward the bow during recovery operations.

Properly equipped EOD/weapons personnel shall be stationed in flight deck control to provide technical assistance and weapons disposal. The Air Gunner/air wing ordnance officer shall maintain a status board that confirms type, quantity, and location of all weapons on the flight deck and/or aircraft. Additionally, weapon cookoff times shall be conspicuously posted in plain view of the aircraft handling officer.

Loading limited amounts of weapons on the hangar deck may be authorized by the commanding officer when the operational necessity so dictates the acceptance of the additional risk of fire with fuel and explosives in a confined

area. Authorization for loading on the hangar deck shall be limited to those aircraft scheduled for the next launch or on an alert condition, and is restricted to the particular weapons indicated in Appendix A.

WARNING

- Personnel shall not approach an aircraft to perform weapons system checks while the engine(s) is turning until cleared to do so by the ordnance arming supervisor. The ordnance arming supervisor shall be positioned in full view of the pilot and shall have the pilot's attention.
- Aircraft shall not be taxied until pretaxi checks and required procedures prescribed in the appropriate NAVAIR weapon/store loading checklists/SRCs have been completed.

Note

- The mechanical latching on aircraft racks/launchers shall be completed before the engine(s) on that aircraft is started for launch.
- Inert conventional weapons and captive air-launched missiles shall be loaded/downloaded and armed/dearmed in the same manner as live weapons.

7.1.4 F-35C Weapons Concept of Operations

1. All weapons loading/downloading evolutions conducted on the F-35C shall be accomplished in accordance with Joint Technical Data (JTD) procedures. In the event JTD and service operational requirements differ, service requirements shall take precedence.
2. F-35C pneumatic bomb racks and pneumatic missile launchers are charged during loading/downloading evolutions and may be hangared and/or stored charged.
3. The Ordnance Ground Safing Switch, Counter Measure Safing Switch, and Weapons Bay Door Safing Switch shall be positioned in the rearming area after engine start up and before engine shut down.
4. The AIM-9 SAFE/ARM selector handle may be rotated to ARM in the rearming area or arming area in accordance with JTD. Arming signals shall be in accordance with the Aircraft Signals NATOPS Manual (NAVAIR 00-80T-113).

Note

The AIM-9 cannot be reached after the F-35C wings are folded.

5. The AIM-9 SAFE/ARM selector handle shall be rotated to SAFE and the nose cone installed in the dearming area in accordance with paragraph 7.1.8.
6. F-35C with internally and externally loaded AIM-120 series missile Armed Fire Devices (AFD) will be inspected only in the rearming area (immediately after engine shutdown) in accordance with JTD.

Note

HERO is not required to be set prior to troubleshooting. The 25MM gun ammunition is HERO safe.

7. F-35C aircraft recovering with a jammed gun shall be recovered just prior to the tanker and turned into the dearm area. There the aircraft will be chocked and chained until ordnance personnel can determine the posture/condition of the gun pod and take appropriate action as per JTD gun jam clearing procedures.
8. No live ordnance shall be loaded in the F-35C weapons bay on the hangar deck.

7.1.5 Arming

Weapons/bomb racks/launcher arming functions to be performed after engine turnup are defined in the individual store loading manual/checklists. Final arming of forward firing weapons shall be conducted in the arming area just prior to launch.

All evolutions authorized in the rearming area may be accomplished after engine turnup and prior to taxi. Those evolutions authorized to be accomplished only in the arming area shall be conducted as follows:

1. The Air Gunner or a designated air wing ordnance coordinator shall supervise all arming evolutions.
2. Assigned Air Wing Arming coordinators shall be positioned on the bow and waist catapults during launch to oversee all aircraft final arming.
3. The CVW Ordnance Officer shall assign arming crews.
4. Each arming crew shall be supervised by a safety coordinator who will coordinate actual arming with aircraft crew director.
5. Aircraft arming shall be conducted only when the aircraft is at a complete stop, the area in front of the aircraft is clear and remains clear, and only after the director has turned the aircraft over to the arming crew safety coordinator.
6. Actual arming may take place at any time after the following conditions are met: the aircraft is forward of the raised JBD, flaps are in the takeoff position, the nose launch bar is resting on the top of the shuttle, and all personnel are clear of the missile path.

WARNING

Arming crews shall use extreme caution when exiting an armed aircraft to avoid exposure to exhaust end of missiles, gun barrels, and aircraft intake/exhaust. Exit paths for each type aircraft will be formalized by the Air Gunner/CVW ordnance officer to provide the least hazard to arming crewmembers.

7. Arming signals shall be in accordance with the Aircraft Signals NATOPS Manual (NAVAIR 00-80T-113).

7.1.6 Intent to Launch Weapons

Harpoon/SLAM/JSOW is an automatic launch sequence that has been initiated and subsequently been aborted by the aircrew prior to weapon separation from the aircraft. A Harpoon/SLAM/JSOW shall be considered as a hung weapon whenever a Harpoon/SLAM/JSOW signal has been sent to the missile and it has then either failed to release or its release has been aborted prior to separation of the weapon from the aircraft.

If a JSOW Intent To Launch (ITL) is verified, wait two hours before proceeding with unloading. After two hours, disconnect weapon adapter cable. If weapon must be downloaded prior to two hours elapsed time from ITL, wrap cargo strap or aircraft tiedown chain around weapon and wings approximately 3 inches aft of adapter cable receptacle.

WARNING

- Initiation of the ITL signal activates a battery within Harpoon/SLAM. With battery power available within the missile, electrical shorts occurring during aircraft recovery and/or while disconnecting the missile umbilical from the aircraft may actuate the missile engine/pyrotechnics. Battery voltage will remain sufficiently high to allow engine start for up to 35 minutes following ITL and to fire missile launch squibs within Harpoon/SLAM for up to 2.5 hours following ITL.
- Voltage in the JSOW will remain sufficiently high to allow wing deployment if the umbilical is disconnected.

Ships/squadrons shall prepare and publish Harpoon/SLAM/JSOW abort/failure procedures as standard operating procedures that shall be used by aircrew, aircraft handling, and maintenance personnel whenever Harpoon/SLAM/JSOW abort/failure situations occur.

7.1.7 Hung/Unexpended Weapons

Flight leaders shall advise the ship as early as possible of the amount and type of hung/misfired ordnance. Guidance for recovering aircraft with hung/misfired ordnance is provided in the following paragraphs.

Weapon stores not authorized for recovery must be jettisoned. Where this cannot be accomplished, a divert to a shore installation shall be made, if feasible.

The following procedures shall be used when recovering aircraft that must return to the ship with non-jettisonable/hung weapons:

The pilot shall not leave the cockpit until he/she is satisfied that the ordnance is safe.

In order to minimize operational impact, fly-on aircraft carrier currency landings with captive training missile(s) shall be restricted to "touch and go, trap" or "trap, cat, trap" followed by de-arming procedures in the designated de-arming area.

Aircraft shall immediately shutdown to accommodate weapon(s) download prior to next event.

WARNING

An aircraft on-deck with hung or unexpended ordnance poses a serious risk to all personnel in the area or within the line of fire. Failure of ‘non-essential’ personnel to clear the area as described above could lead to unnecessary death or injuries.

CAUTION

Aircraft with externally carried ordnance shall not perform carrier qualification landings because of potential damage to ordnance.

7.1.7.1 In-Flight Procedures

Pilots shall accomplish the following prior to entering the ships control zone:

1. Upon completion of the firing mission, determine if all ordnance has been expended. A visual check between aircraft shall be made of all external stores.

2. In the event of Harpoon/SLAM/JSOW abort/failure or hung ordnance recovery guidance is provided in Appendix A.
3. When it becomes apparent that the ordnance must be brought back to the ship, the ship shall be notified as early as possible. In no case shall hung ordnance be brought into the ships control zone without clearance. Initial notification shall include the amount and type of hung ordnance.
4. Properly safe all weapons systems.
5. Aircraft with non-jettisonable/hung ordnance shall fly shipboard recovery patterns with weapons pointed away from the ship to the maximum extent practicable.

7.1.7.2 Shipboard Procedures

Upon notification of aircraft returning with Harpoon/SLAM/JSOW abort/failure or hung ordnance the following actions shall be conducted:

1. Air Officer conduct the following:
   a. Notify the bridge and other appropriate stations.
   b. Clear landing spot for recovery.
   c. Announce prior to recovery "Stand by to recover aircraft, with hung ordnance on (spot). Hung ordnance is (amount and type)" and, when applicable, the "Harpoon/SLAM/JSOW weapon is present on aircraft. All personnel remain well clear of the flight deck area."
   d. Ensure that rapid-response firefighting equipment is manned and ready.
   e. Ensure the ordnance safety supervisor and unit de-arming team are on station prior to recovery.
2. Ensure the proper HERO condition is set.
3. Prior to jettisoning ordnance from the ship, approval shall be granted by the Commanding Officer.

WARNING

All flight deck personnel, including LSEs, shall remain clear of the line of fire and/or danger area of an aircraft landing with hung weapons. Only minimum required personnel shall remain in the vicinity of the landing area. The pilot shall not leave the cockpit until he/she is satisfied that his/her ordnance are safe.

7.1.8 Dearming

All dearming evolutions will be conducted in accordance with the individual aircraft store loading manual/checklist. When dearming is required before engine shutdown, all required dearming procedures will be accomplished in the dearming area. All further safing evolutions that are authorized to be conducted after engine shutdown may be accomplished after taxi to the shutdown spot and must be accomplished before respotting to the hangar deck. All dearming required to be accomplished in the dearming area will be accomplished as follows:

WARNING

The area immediately in front of an aircraft with forward firing ordnance must be clear and remain clear until dearming is completed. Sweeping of personnel/equipment by armed aircraft shall be held to an absolute minimum.

1. The Air Gunner or a designated air wing ordnance coordinator shall supervise all dearming evolutions. He shall ensure coordination exists between the directors and dearming crew. He shall indicate to the director those aircraft that require safing before taxi to the recovery spot.

WARNING

Dearming crews shall use extreme care when approaching an armed aircraft to avoid exposure to exhaust end of missiles, gun barrels, and aircraft intake/exhaust. Entry paths for each type of aircraft will be formalized by the CVW Ordnance Officer to assure the least hazard to arming crewmembers.

2. Aircraft dearming shall be conducted as soon as practicable after taxiing clear of the landing area or, if necessary, in the landing area at the discretion of the air officer. Dearming shall be conducted only when the aircraft is at a complete stop, the area in front of the aircraft is clear and remains clear, and only after the director has turned the aircraft over to the dearming crew coordinator.
3. The Air Gunner or designated air wing ordnance coordinator supervising dearming shall ensure sufficient safety personnel are positioned to keep the area in front of the aircraft clear.
4. Dearming signals shall be in accordance with the Aircraft Signals NATOPS Manual (NAVAIR 00-80T-113).

Aircraft landing with hung weapons and/or forward firing weapons shall be safed as soon as practicable after taxiing clear of the landing area or, if necessary, in the landing area at the discretion of the air officer. They shall be stopped with a clear area ahead when forward firing weapons are involved and safed in accordance with NAVAIR weapons/stores loading checklist and/or EOD emergency procedures, if applicable, prior to being taxied into the recovery spot. Aircraft safing signals shall be in accordance with Chapter 5 of the Aircraft Signals NATOPS Manual (NAVAIR 00-80T-113).

For the Harpoon/SLAM/JSOW weapon, aircraft respot is prohibited until the after-landing or ground-abort portion of the aircraft store loading manual has been complied with. A 3-foot wide by 8-foot long clear zone shall be established behind the missile; this clear area and the area beneath the missile shall be maintained clear for a 2.5-hour period following Harpoon/SLAM/JSOW ITL abort/failure.

Aircraft landing with unexpended weapons shall have weapons safed in accordance with NAVAIR weapons/stores loading checklists and in all cases prior to commencement of any postflight checks or refueling of the aircraft.

WARNING

Downloading of aircraft shall not commence until that aircraft's engine(s) is shut down.

7.1.9 Maintenance on Loaded Aircraft

Maintenance shall not be conducted on aircraft loaded with weapons; however, routine servicing and minor maintenance that would ready the aircraft for the next launch may be conducted with the following restrictions:

1. Weapons shall be safed to the maximum degree as specified in the NAVAIR weapons/store loading checklists.
2. When the weapon loaded placard/sign required by the individual aircraft store/weapon loading manual checklist is in place, the maintenance or servicing of loaded aircraft that requires application of electrical power is limited to the following:
   a. Refueling.
   b. Replacement and checkout of communication and navigation equipment.

c. Replacement and checkout of engine performance and flight instruments.

d. Engine turnup for checkout.

e. Flight control and hydraulic system checks.

3. Maintenance requiring the application of electrical power to the armament or weapon release and control circuitry shall not be performed while weapons are loaded or are being loaded/downloaded.

4. An aircraft requiring extensive troubleshooting, engine removal, complete jacking, etc., is not considered readily available for flight and shall be downloaded prior to commencement of the required maintenance.

Downloading includes removal of all impulse cartridges from ejector racks/breeches and all rounds of ammunition from feed chutes/feed mechanisms of internal guns.

7.1.10 Abort/Strikedown

The flight deck is always the preferred area for downloading weapons. If it is required to strike below loaded aircraft, weapons shall be immediately downloaded from aircraft after reaching the hangar deck unless that aircraft is the following:

1. Readily available for flight and scheduled for the next launch.

2. In an alert condition.

3. Requiring only such maintenance or servicing as previously permitted on aircraft loaded with weapons.

In any abort/strikedown situation, the abort/afterlanding procedures for the particular weapons that are prescribed in the NAVAIR weapon/store loading checklists/SRCs shall be accomplished before the aircraft is moved to the hangar deck.

WARNING

- Bomb rack ejector/jettison cartridges shall be removed from all aircraft stations prior to or immediately after strikedown of the aircraft to the hangar deck. Ejector/jettison cartridges may remain in the BRU-9/10/11 ejector bomb rack provided the rack is electrically disconnected and either the mechanical safety pin is installed or the in-flight operable bomb rack lock (IFOBRL) mechanism is locked (as applicable).
- Certain weapons are specifically excluded from the provisions of this chapter. Refer to Appendix A for a listing of those weapons that may not be struck below while loaded on an aircraft.

For a Harpoon/SLAM/JSOW abort/failure, respot of the aircraft is prohibited during peacetime operations until 2.5 hours have elapsed from Harpoon/SLAM/JSOW. Under combat/emergency conditions and after 35 minutes from Harpoon/SLAM/JSOW, download prior to completion of the 2.5-hour waiting period is authorized providing the missile is moved to a safe area of the flight deck with the nose-oriented outboard over the deck edge. A safety watch shall be assigned to maintain the safe zone clear. Harpoon/SLAM/JSOW weapons shall not be staged in the normal weapon staging areas, but shall be placed in a separate designated area that meets weapon staging area criteria and is in the immediate vicinity of a jettison ramp. After 2.5 hours of elapsed time, strikedown of a weapon and return to storage is authorized.

7.1.11 Emergency Procedures

In case of fire or danger of fire near weapons, the weapons shall be moved to a safe area or jettisoned as the situation dictates.

1. Armed aircraft returning to the ship with an emergency shall be dearmed immediately after landing in the landing area prior to the aircraft being towed.
2. Aircraft returning with suspected gun jam shall be dearmed in the dearming area and parked in a designated area with aircraft pointing over the water in a safe position for further troubleshooting.

CHAPTER 8

Helicopter Procedures

8.1 GROUND OPERATIONS

8.1.1 Starting Engines

1. There are no wind limitations for starting engines; the air officer, Helicopter Control Officer (HCO), or Helicopter Engaged Turn Officer (HETO) should be prepared to engage rotors immediately following engine start.
2. Personnel shall not enter or exit the rotor arc with the engines operating and the rotor brake on. Excessive time with the engines operating and the rotor brake on should be avoided. The air officer, HCO, or HETO should be prepared for rotor brake slippage at all times.
3. The Auxillary Power Unit (APU) may be started provided there is enough clearance to prevent damage to adjacent aircraft/equipment from APU exhaust.

8.1.2 LSE/PC Calls

The LSE/PC shall request permission for the following evolutions through Flight Deck Control or PriFly: engine start, rotor engagement/disengagement, and to “break” and “lift”.

8.1.3 Safety Precautions

Refer to Paragraph 8.6 for helicopter ground operations safety precautions.

8.2 LAUNCH

Helicopter Launch/Recovery Deck Spots on CVN type or CV type ships are specified in Appendix B. Helicopter launching/recovery wind envelopes for the various deck spots are contained in Appendix C.

8.2.1 Weather

CVN launch weather minimums are 200-1/2.

8.2.2 Prior to Launch

Helicopter spread and start sequence, rotor engagement, and launch shall be in accordance with appropriate aircraft NATOPS procedures and shall only occur after the proper signal from a qualified LSE and under positive control of PriFly.

WARNING

If launch/land operations for the CH-53E, MH-53E and V-22 aircraft are conducted on any unsecured area or upwind of other aircraft, rotor wash/wingtip vortices may cause unstable airflow resulting in aircraft damage and injury to personnel. Consideration should be given to conducting CH-53E, MH-53E and V-22 operations from afterdeck spots only.

Note

- During EMCON, concurrent operations may lead to misinterpretation of the rotating beacon signals.
- To reduce UHF transmissions during EMCON, rotary beacon signals for helicopter operations are found in the Aircraft Signals NATOPS Manual (NAVAIR 00-80T-113).

For all launches, the air officer shall ensure the relative wind is within the envelope prescribed in the applicable NATOPS flight manual. For night and IMC launches, the nose of the helicopter shall be oriented to the center-line of the angle or axial deck and within the visual parameters established in the respective aircraft NATOPS flight manual. Before launch, with the ship steady on launch course, PriFly will order tiedowns removed. The LSE shall then signal for removal of the tiedowns, ensuring the pilot sees the signal. Tiedowns shall not be removed from a helicopter until the pilot has signified he is ready to launch and the LSE has received permission from PriFly.

After removing tiedowns and chocks, the plane captains or plane handlers shall hold the tiedowns up for the pilot and LSE to see and then clear the area. As tiedowns are being removed, PriFly shall broadcast the relative wind direction and velocity and then activate the appropriate rotating beacon signals (see Aircraft Signals NATOPS Manual [NAVAIR 00-80T-113]). The pilot will not commence takeoff until he has received the launch signal from the LSE. Before launching a helicopter, the LSE shall ensure the following:

1. All tiedowns have been removed.
2. The area affected by the helicopter downwash is clear of unnecessary personnel and the area over which the helicopter will pass is clear.
3. Airborne aircraft are well clear.
4. Confirm launching signal/approval from PriFly.
5. Sufficient clearance area exists for maneuvering during post-maintenance hover tests.

The departing helicopter, if SAR capable, shall report red light to the controlling agency (i.e., tower, departure, ASTAC) upon launch (EMCON permitting). When there is a significant change in the red light or red light is reached, a radio call to the controlling agency should be made.

Unless otherwise directed, helicopters shall take departure to port and shall not cross the bow within 5 nm or the stern within 3 nm (Figure 8-1) without specific clearance from the tower.

8.2.3 Launch Procedures

Launching of helicopters from Spots 4, 5, and 6 with aircraft turning in the “six-pack” should be avoided to prevent hot gas ingestion of a departing helicopter (potential for compressor stalls) and to decrease heat stress on LSE/PC, FDC, and helicopter troubleshooters. The Pilot in Command (PIC) should expect to be notified of turning aircraft in the “six-pack”.

Figure 8-1. Helicopter Restrictions During Fixed-Wing Launch/Recovery

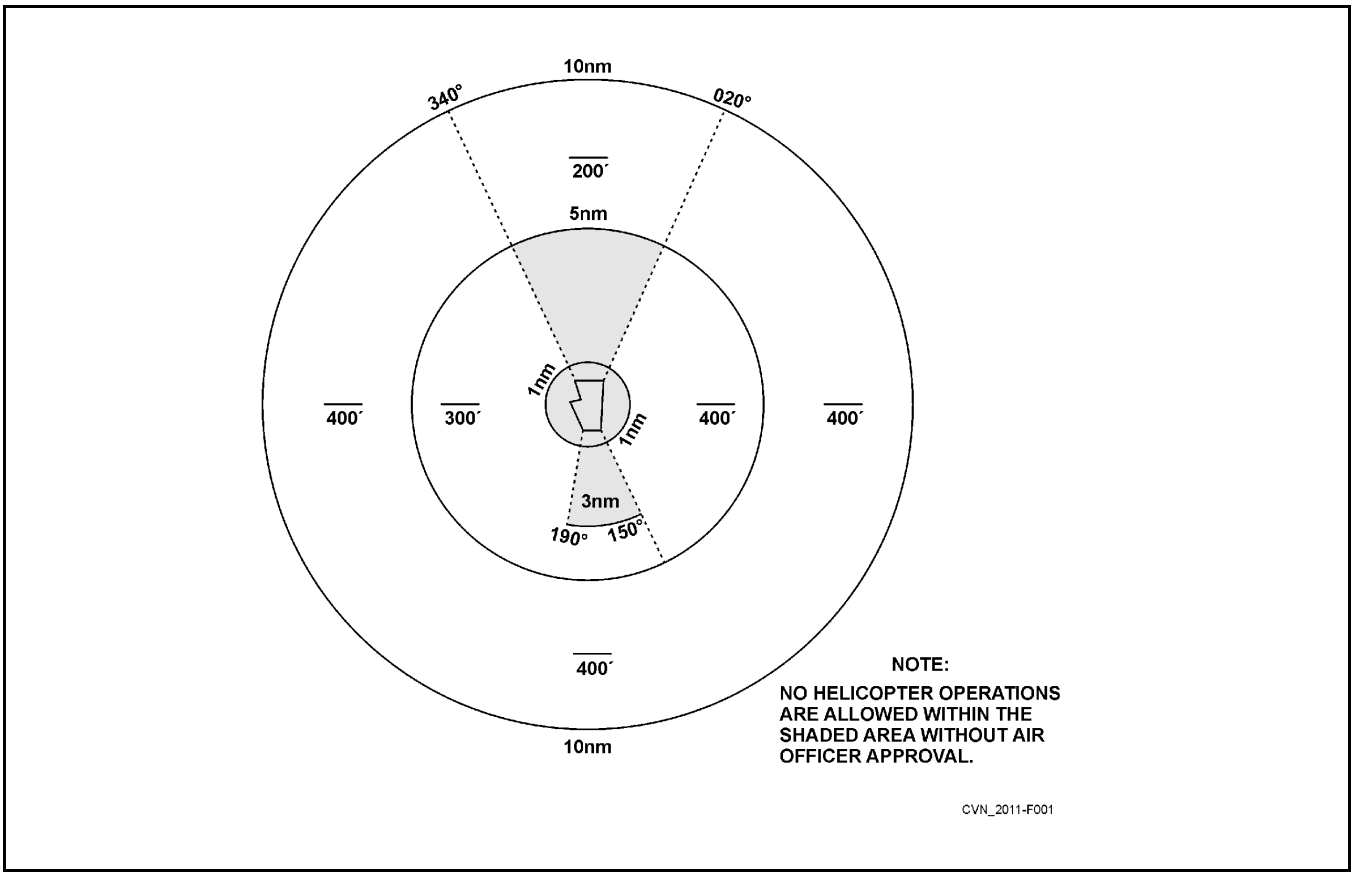

When ready for break-down and launch, in addition to light signals required by CV NATOPS, helicopters shall place formation lights to full bright as an additional warning to flight deck personnel of impending launch. The LSE shall call tower and request launch.

SAR capable helicopters will report "red light" in HHMM local (e.g. "6/7XX, 4 souls, 1645 red light"). Non-SAR capable helicopters will report fuel state HHMM local to NATOPS minimum fuel (e.g. "6/7XX, 3 souls, 3+30").

When multiple high gross weight helicopters are launched from Spots 3, 4, 5, 6, and 8 they should, to the maximum extent practical, be sequenced from forward to aft to allow for use of the landing area for departure to gain airspeed vice a sidestep resulting in an out of ground effect hover with inadequate power margins. The PIC may also request adjusted winds to reduce power required on takeoff or landing.

Helicopters departing Spot 9 should normally lift and depart to starboard or port depending on winds. When an angled deck departure from Spot 9 is required or desired, the PIC shall notify tower and request a "departure up the LA (Landing Area)" so the air officer/HCO can clear the angle prior to departure.

8.2.4 Departure Procedures

8.2.4.1 Case I and Case II

Helicopters shall clear the control zone as directed by the tower. When departing for operations within the control zone (for example, SAR), they shall remain under control of the tower or other designated controlling agency.

8.2.4.2 Case III

Whenever possible, helicopters shall be maintained as a flight beneath the clouds. If unable to remain beneath the clouds, they shall proceed individually to pre-briefed departure fixes. After takeoff, they shall climb straight ahead

to between 200 to 300 feet (unaided), 150 to 300 feet (NVD aided), or as assigned by CATCC, and arc within 3 nm to intercept the assigned departure radial. Helicopters being launched from the angled deck will not cross the bow when fixed-wing aircraft are being launched. SAR helicopters will arc to the SAR pattern if able to remain beneath the clouds. If the SAR helicopter is unable to remain beneath the clouds, the procedure presented above shall be carried out under positive control of CATCC and position will be taken in helicopter marshal (Figure 8-3). The climb to departure altitude will be commenced on the departure radial outside 12 nm.

8.2.5 Lost Communications

Helicopters experiencing lost communications should remain at or below 300 feet, arc to enter starboard delta, and execute lost communications procedures in accordance with Figure 8-4.

8.2.6 Functional Check Flights

Helicopter Functional Check Flights (FCFs) often require numerous ground turns and flight evolutions to perform vibration analysis. FCF flights can be conducted concurrently with fixed wing operations.

8.2.7 Detachments

Detachments attached to, or in company with, the Carrier Strike Group (CSG) will follow the direction of the appropriate embarked Squadron CO and CAG when cancelling flights due to weather. Detachments should use CVN Metro to the maximum extent practical to determine weather conditions.

8.2.8 Safety Precautions

Refer to Paragraph 8.6 for helicopter launching safety precautions.

8.3 PLANE GUARD

Any external tasking to the primary Plane Guard (PG) helicopter shall be reported immediately to the air officer for coordination and approval.

The PG helicopter is not required to hold in Starboard Delta and is encouraged to vacate the starboard side during routine fixed wing recoveries to avoid the de-arm area forward of the 90 degree bearing line. During carrier qualification landings, the Starboard Delta pattern (Figure 8-2) should be used.

Note

- During recovery of aircraft with forward firing ordnance, the plane guard helicopter shall not be positioned on the starboard side from the 360 to the 090 degree relative bearing within 5 nm from the carrier.
- The air officer shall be notified immediately if the primary PG helicopter changes.

The presence of personal weapons, crew served weapons, fixed forward firing weapons, torpedoes, CATMs, DATMs or expendables shall not prevent an otherwise SAR capable helicopter from being tasked with PG responsibilities or SAR.

Figure 8-2. Starboard Delta Pattern

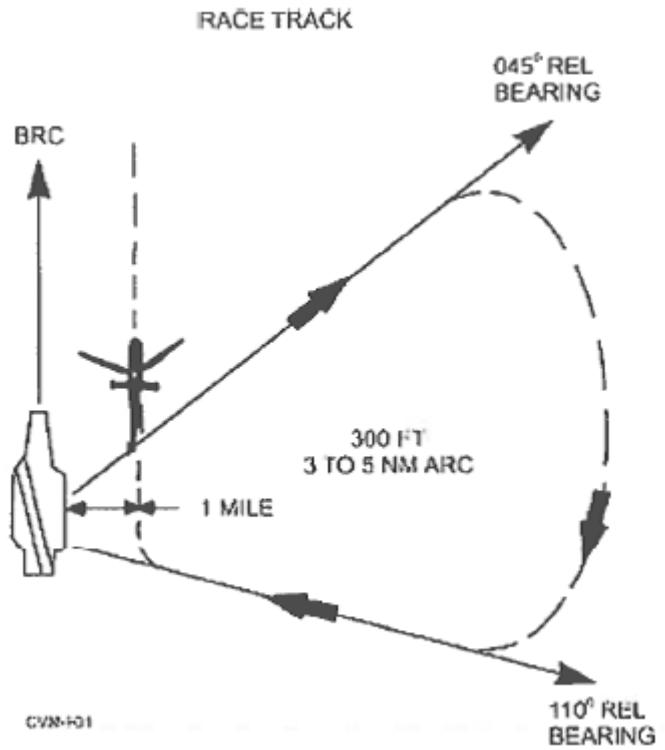

Figure 8-3. Approach Chart CV-3 TACAN (Helicopter)

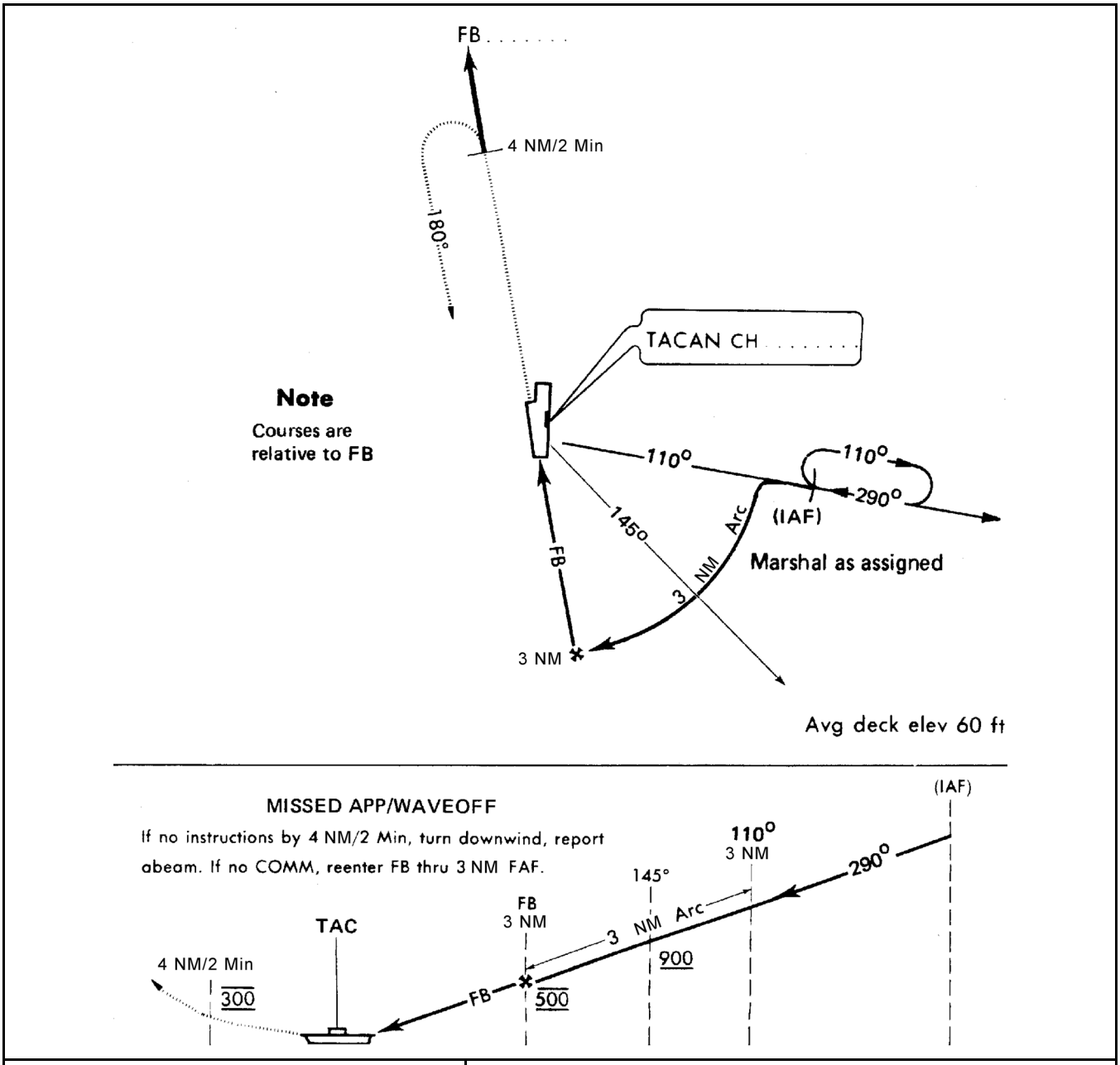

Highest Obstruction — 250’	Flight Deck Elevation — 60’
	MDA or DH-Vsby, HAT, (Weather Minimum)
	Helicopter
ASR/TACAN	360-¾ 300 (300-¾)
ACLS Mode III	260-½ 200 (200-½)

Figure 8-4. Emergency Signals to Ship from Helicopter with Radio Failure

PILOT'S DESIRES OR INTENTIONS	VISUAL SIGNAL
1. I require immediate landing.	Fly close aboard starboard quarter, remaining clear of other traffic, with gear down and flood/search/landing lights on. With complete electrical failure, fire a red flare to seaward.
2. I desire to land but can wait for the next recovery.	Fly by or hover on the starboard side of the ship, low and close aboard, with navigation lights bright and flashing and anticollision lights on.

Note

A GAU-21 installed in a MH-60R does not preclude SAR operations, but it does present an obstacle to the crewmen due to its size and location in the cabin door. To the maximum extent practicable, the GAU-21 and swing arm should be removed before tasking a MH-60R in this configuration to conduct PG.

Any airborne helicopter can be tasked to support PG requirements provided proper coordination has been conducted by Air Operations and the embarked squadron.

8.3.1 Control Authority

A helicopter, when designated primary plane guard, shall be under the operational control of the air officer during launches and recoveries. During Case II or III operations or advisory control, the base recovery course and all course changes shall be provided by CATCC using a frequency monitored by primary flight control. CATCC shall conduct a radio check with the plane guard helicopter at least every 20 minutes during Case III. Plane guard helicopters may conduct additional missions as necessary while assigned to PG provided a responsive plane guard capability is maintained during launch/recovery.

The air officer normally will be responsible for controlling plane guard efforts when they are within sight of the ship. CDC/CATCC normally will control plane guard efforts when outside visual contact of the air officer. A switch to a discrete plane guard frequency will be made when directed by the controlling agent/agency.

8.3.2 Plane Guard Station

The designated plane guard helicopter is "on station" when operating within 20 nm (day) or 10 nm (night) of the carrier. The helicopter shall remain within UHF range and monitor the assigned air control frequency at all times.

8.3.3 SAR Response

In the event of a plane guard incident, the designated plane guard helicopter shall immediately respond unless otherwise directed by the air officer.

8.3.4 Restrictions

During launch/recovery, no concurrent ASW/plane guard operations shall be conducted within the shaded area depicted in Figure 8-1 without the explicit approval of the air officer. The maximum altitudes when conducting concurrent ASW/plane guard operations shall be as depicted in Figure 8-1. All bearings are relative to the ship's BRC.

8.3.5 SAR Requirements

Figure 8-5. Minimum SAR Requirements

	WITHIN RANGE OF A SUITABLE LANDING FIELD		OUTSIDE RANGE OF A SUITABLE LANDING FIELD
	DAY	NIGHT OR LOW VISIBILITY	DAY & NIGHT
FIXED WING AND TILTROTOR CARRIER QUALIFICATIONS	A or B	A, C or D	NA
FIXED WING AND TILTROTOR CURRENCY	A or B	A, C or D	Note 1
CYCLIC OPERATIONS	A or B	A, C or D	Note 1
HELO AND TILTROTOR OPS/SHIP ANCHORED/ BETWEEN FLIGHT OPS	E	E	E

A. One plane guard helicopter airborne and one helicopter in Condition III (see Note 2, 3).
B. One surface combatant in lifeguard station and one helicopter in Condition III (see Note 2).
C. One plane guard helicopter airborne and one surface combatant in lifeguard station.
D. One helicopter in Condition III (see Note 2) and two surface combatants, one in lifeguard station and one within UHF radio range.
E. One helicopter in Condition III (see Note 2) and one helicopter in Condition IV.

NOTES:
1. When outside range of a suitable landing field, the same rescue unit criteria shall apply for day and night except that at least one helo capable ship should operate within 40 nm of each aircraft carrier under both day and night conditions.
2. The Rigid Hull Inflatable Boat (RHIB) and crew may be used in place of a helicopter in Condition III at CV CO's discretion. When so used, the RHIB shall be ready, and the crew assigned and available.
3. An aircraft refueling and/or conducting a crew change on Helicopter Spot 7 can meet the requirement of an airborne SAR helicopter at CV CO's discretion. Upon completion of refueling/crew change, the helicopter shall launch without delay to resume airborne plane guard responsibilities.

8.3.6 Helicopter Readiness Conditions

8.3.6.1 Condition I

The aircraft shall be spotted for immediate launch, with rotor blades spread, starting equipment plugged in, and a LSE, starting crewman, plane captain, and required plane handlers standing by. Unless otherwise directed by the aircraft handling officer, at least four tiedowns shall be attached to the aircraft. The flightcrew shall be ready for launch in all respects, with all personnel equipment attached and adjusted as in flight.

8.3.6.2 Condition II

The same conditions apply as for Condition I, except that flightcrews shall stand by in the ready rooms.

Note

An alert SAR helicopter in Condition II may be folded provided the primary SAR helicopter is airborne.

8.3.6.3 Condition III

Main rotor blades may be folded and the aircraft need not be in position for immediate launch; however, it must be parked so as to allow direct access to a suitable launch spot. A towbar shall be attached to the aircraft and a specific

LSE, tractor driver, handling crew, and starting crewman shall be designated and assigned to each helicopter. These personnel must be thoroughly briefed so that when the order is given to prepare to launch, the aircraft can be safely and expeditiously moved into position and readied for launch. Flightcrews should be briefed for the launch and be standing by in a designated location.

Note

Due to the aft placement of the tail wheel on certain T/M/S H-60 helicopters, there may not be sufficient space to attach a tow bar to a folded helicopter without it extending beyond the foul line. In this situation it is acceptable to have the tow bar stowed adjacent to or beneath the aircraft to facilitate an expeditious attachment and aircraft spotting as long as all other requirements are met.

8.3.6.4 Condition IV

This is similar to Condition III except that minor maintenance may be performed on the aircraft if no delay in launch is involved.

8.3.6.5 Launch of Condition Helicopters

When the air officer passes the word to stand by to launch the Condition I helicopter(s), engines shall be started without further instructions; however, rotor engagement and launch shall be positively controlled by PriFly.

8.4 RESCUE HELICOPTER OPERATIONS

8.4.1 Rescue Helicopter Criteria

It is impossible to set specific criteria for launching helicopters under all emergency rescue conditions. Each situation is different, and all factors must be considered to determine if the risk involved is warranted at the time. To provide guidelines, the following list of factors should be considered:

1. Present weather — Temperature, wind, sea state, etc.
2. Urgency of emergency — Definite, suspected, live, dead, etc.
3. Other rescue vehicles in area — Helicopters, ships, etc.
4. Maneuvers of carrier — Turning, pitching, downwind, etc.
5. Location of helicopter — Bow, stern, elevator, etc.
6. Location of victim(s) in relation to ship.
7. Status of flight deck — Launching, recovering, standby, etc.
8. On night launch, the pilot needs a visual reference and the relative wind on the nose of aircraft.
9. Night adaptation of pilot and crew, if applicable.
10. Warm-up of electronic gear.
11. Capabilities of individual pilot.

This list is not to be considered all-inclusive nor preclude the possibility of other variable factors present that may affect the advisability of launching under adverse conditions.

8.4.2 Rescue Helicopter Mission Information

The following information should be passed to rescue helicopters by PriFly or other controlling agency as soon as available:

1. Type of mishap (i.e., man overboard, ejection, etc.).

2. Magnetic bearing and distance to emergency area.
3. Surface wind direction and velocity.
4. Ejection altitude if applicable.
5. Number of persons requiring rescue and condition, if known; readback is required.
6. Radio frequency for radar vectors if required; radio frequency and call sign of pathfinder aircraft if utilized; and radio frequency and call sign of the SAR on-scene commander, if applicable.
7. Additional information as necessary. (Use of the SAR frequency should be limited exclusively to passing information necessary to the rescue helicopter pilot.)

Note

Rescue swimmers shall not enter the water during night/IMC simulated rescue operations in an open ocean environment.

8.5 RECOVERY

8.5.1 Transient Helicopters

Transient helicopters approaching the carrier for landing shall contact marshal control at least 25 nm out. During Case III, marshal control will clear helicopters to CV-3 holding or starboard delta as requested. Helicopters unable to check in with marshal control because of communications difficulties should proceed as directed in Figure 4-1. Transient helicopters inbound for the CVN should expect to proceed to Starboard Delta for recovery unless otherwise directed.

8.5.2 Helicopter Holding

Helicopters shall proceed to a holding pattern as specified by tower for recovery. If one is not specified they shall hold clear of the avoid areas depicted in Figure 8-1 in such a manner that will expedite recovery. Unless previously briefed to the contrary, when more than one helicopter is operating in the holding pattern, all helicopters shall fly a right-hand pattern at 300 feet while maintaining 80 knots.

8.5.3 Recovery Procedures

When recovering after night plane guard duties, helicopters should be provided positioning information by CATCC in order to expeditiously intercept the glideslope and effect a landing following recovery of the last fixed-wing aircraft. When a flight of helicopters is being recovered under VMC, the leader of the flight should plan to be at the ramp within a minimum safe interval after the last fixed-wing aircraft has landed. The helicopter which is the farthest advanced on the inbound radial and has not turned to parallel the ship's course will be considered No. 1 in the landing pattern and should expeditiously effect a landing following recovery of the last fixed-wing aircraft. The helicopter cleared No. 1 to land should be assigned a landing spot farthest forward into the wind. Subsequent helicopters should be cleared to land in sequence behind the No. 1 helicopter. In the event the last fixed-wing aircraft waves off, all helicopters shall reposition in the pattern (with CATCC assistance as required) to take interval on that last fixed-wing aircraft. Prior to issuing landing clearance, the air officer shall ensure the helicopter may land within the relative wind envelope prescribed in the respective aircraft NATOPS flight manual, and the tower shall transmit relative wind direction, speed, and landing spot(s). For landings not oriented to the angle or axial centerline (day VMC only), the air officer will ensure an adequate waveoff path is available to the helicopter.

WARNING

If launch/land operations for the CH-53E, MH-53E and V-22 aircraft are conducted on any unsecured area or upwind of other aircraft, rotor wash/wingtip vortices may cause unstable airflow resulting in aircraft damage and injury to personnel. Consideration should be given to conducting CH-53E, MH-53E and V-22 operations from afterdeck spots only.

Note

- Rotating beacon light signals for helicopter operations are contained in the Aircraft Signals NATOPS Manual (NAVAIR 00-80T-113).
- Army helicopters are not equipped with an automatic blade fold/spread system. Time for manually folding and spreading main rotor blades should be taken into account for tactical planning during shipboard operations.
- Certain Army and Air Force helicopters are not equipped with a rotor brake. Extended rotor coast down times can be expected. These times can vary with relative wind speed and direction, and can exceed 8 minutes in winds as light as 20 knots. The ship shall be ready to provide optimum winds for the windmilling stop of the rotor system.

During Case III recoveries, the approach shall be flown as directed by CATCC until the pilot acquires visual contact with the optical landing aids, at which time the pilot shall "call the ball." Control will then be assumed by the air officer, who shall issue final landing clearance. In the event of a waveoff, the pilot shall parallel the final bearing course and report to CATCC for control. At night, navigation lights shall be STEADY/BRIGHT and anticollision lights ON until established on the final bearing, at which time the navigation lights shall be switched to STEADY/DIM.

When the word is passed to stand by to land helicopters, the LSE shall take a position clearly visible to the pilot. The tower will obtain a "gear down" report from the pilot before issuing final landing clearance. As the helicopter approaches, the LSE shall ensure the landing gear is down, the rotating beacon that controls his area of the flight deck is green or amber, as appropriate, and that the landing area is clear of personnel, equipment, and loose gear.

Except in unusual circumstances, helicopters shall be landed only on marked spots visible to the pilot during the final approach.

Except for the "waveoff" and "hold" signals, the LSE signals will be accepted as advisory and the pilot has full responsibility for the proper and safe operation of the aircraft. At night when two or more helicopters are landing, the navigation light shall remain STEADY/DIM and the upper anticollision lights shall remain ON until touchdown. After landing and before disengagement, chocks will be placed on the main wheels and the initial aircraft tiedowns will be attached by the deck crew. A hold signal will be given by the LSE while tiedowns are being attached to indicate that an unsafe takeoff condition exists. Navigation lights shall be switched to FLASHING/DIM (day: FLASHING/BRIGHT) until the rotors have been disengaged and are fully stopped. The LSE will then signal for the aircraft lights to be turned OFF. When helicopters are recovered immediately ahead of fixed-wing aircraft, pilots shall shut down and disengage as expeditiously as feasible. They shall remain in their aircraft until towed clear of the fixed-wing landing area. An amber or red light will be ON whenever rotors are engaged on deck.

Helicopters directed to "snuggle up" should operate within 1 nm of the ship and expect to land within the next 5 minutes. Helicopters directed to "charlie" are cleared to cross the stern (if required) and to commence an approach to the designated landing spot. Helicopters shall sequence themselves for landing in order.

Landings to spots other than designated VLA helicopter are permitted for H-60 type/model aircraft specifically noted on the H-60 Launch and Recovery Envelopes. The CVN Common Launch and Recovery Envelope shall be used as the applicable launch and recovery envelope.

Carrier Control Approaches (CCAs) on the last recovery at night are encouraged for both pilot and Carrier Air Traffic Control Center (CATCC) controller proficiency. Squadrons will ensure CCAs are annotated on the Air Plan when desired and prior coordination is performed with the air officer. Full landing area lights, a clear Landing Area, and the Fresnel Lens are required for CCAs to the deck.

Upon calling the ball during a night recovery, the lower anti-collision light shall be secured. Once on deck, the upper anti-collision light shall be secured and navigation lights switched to FLASHING.

8.5.4 Safety Precautions

Refer to Paragraph 8.6 for helicopter recovery safety precautions.

8.5.5 Instrument Recoveries

The primary TACAN marshal fix is at 1,000 feet and 5 nm on the 110 degree radial relative to the expected final bearing (Figure 8-3). For multiple helicopters, each successive marshal holding fix adds 1 nm of distance and 500 feet of altitude (e.g. 6 nm and 1,500 feet, 7 nm and 2,000 feet, etc.). The holding pattern is a right-hand racetrack pattern with 2 nm legs. The inbound leg shall pass over the holding fix.

Helicopter emergency marshal radial is the same as normal helicopter marshal radial with helicopter emergency holding normally commencing at 7 nm.

Helicopters shall descend at 90 knots and 500 feet per minute from marshal, crossing 145 relative to the final bearing at or above 900 feet. Unless otherwise directed, helicopters shall commence transition to a landing configuration prior to the 3 nm fix.

Instrument approaches should be conducted under the control of CATCC and by the pilot's reference to the Optical Landing System (OLS). CCAs shall be available for night helicopter recoveries.

During Case III recoveries, CATCC should vector helicopters to intercept final bearing at 3 nm and 500 feet MSL to expedite recovery.

With clearance from the air officer or HCO, helicopters may be air-taxied up the landing area to an assigned spot at a safe closure rate with pilot reference to visual signals from the LSE.

8.5.6 Approach Weather Minimums

Figure 6-5 contains approach weather minimums for helicopters.

8.5.7 PALS Mode III Procedures

Helicopters shall pass the 3 nm fix at 500 feet in a landing configuration and maintain 500 feet until interception of the glidepath or until otherwise directed.

8.5.8 Nonprecision Approach

When precision approach radar or suitable visual landing aids are not available, helicopters on final approach should continue descent to 300 feet after passing the 3 nm fix. The final controller will provide sufficient information in order for the pilot to maintain an accurate azimuth and altitude profile until reaching nonprecision minimums.

8.5.9 Waveoff

Helicopters shall climb straight ahead on the extended final bearing to an altitude of 300 feet and await instructions from approach control.

If no instructions are received within 2 minutes or prior to reaching 4 nm ahead of the ship, the pilot will attempt to make contact with the ship, giving identification and position. If instructions are not received, the pilot will assume communication failure and execute a turn downwind reporting downwind abeam. If radio contact is not reestablished, the pilot will proceed downwind and reenter through the 3 nm fix or turn inbound 2 minutes past abeam.

8.5.10 Instrument Emergencies

If navigational equipment is available, lone aircraft will continue approach. Pilot may utilize emergency survival radio on guard (243.0) frequency if time and safe control of aircraft permit. If all communication and navigational equipment is lost, helicopters may continue descent to 300 feet, proceed by DR until 2 minutes past individual expected ramp time, and then fly the appropriate triangular pattern for lost communications, squawk EMERGENCY, and conserve fuel.

8.5.11 Emergency Landing

As much deck space as possible will be made available for emergency helicopter landings. If time permits, the senior helicopter squadron or unit officer on board should take station in the tower or in CATCC, and the air officer should determine the optimum relative wind and request the bridge to maneuver the ship as necessary. In clearing a helicopter for an emergency landing, PriFly will ordinarily designate an area of the flight deck rather than a specific landing spot. Once the aircraft is on final approach, it is imperative that the ship hold a steady course.

During an emergency landing, the LSE, if immediately available, shall stand at the upwind edge of the designated landing area. The LSE signals are advisory in nature, except for the waveoff and hold signals, which are mandatory. The LSE shall give a waveoff only in case of a foul deck or if instructed by the tower to do so.

8.6 SAFETY PRECAUTIONS

The following safety precautions applicable to helicopter operations shall be observed.

WARNING

The combination of relative winds and rotor downwash when launching or landing a helicopter immediately upwind of another turning aircraft presents a hazard for personnel who may be blown into the downwind aircraft.

1. Personnel shall not be permitted to approach or depart a helicopter while its rotors are being engaged or disengaged.
2. Personnel required to be in the area of helicopters engaging or disengaging rotors shall either stand next to the fuselage or well outside the rotor area.
3. The air officer or his representative shall pass over the 5 MC, “Stand well clear of helo (side #) while engaging/disengaging rotors on spot (#).”

WARNING

Inboard mounted external fuel tanks or stores on Army UH-60 Aircraft significantly impede access to the main wheels, exposing flight deck personnel to risk of injury in the event of inadvertent jettison or aircraft movement while chocking. Consideration should be given to safing the external stores jettison circuit prior to chocking, balanced with the need to expeditiously chock and chain the aircraft to prevent aircraft movement under severe deck motion conditions.

4. Except in case of emergency, pilots shall not stop engines or fold rotor blades without proper clearance from the LSE.
5. The waveoff and hold signals are mandatory and shall be executed immediately.
6. Helicopters should not be taxied on the flight deck.
7. Helicopters shall not be towed or pushed with rotors engaged.

Note

Helicopter rotor engagement/disengagement and helicopter launch/recovery while a ship is in a turn should only be attempted when the ship has reached a steady state turn and is within published wind envelopes.

8. With ship roll (heel) greater than 4 degrees, launch/recovery of helicopters while the ship is in a turn should be attempted only when authorized by the carrier commanding officer or his designated representative. Anticipated wind parameters and ship's heel must be communicated to the helicopter aircraft commander prior to execution.

9. With ship roll (heel) greater than 4 degrees, helicopter rotors should not be engaged/disengaged while the ship is in a turn. Engagement/disengagement attempts while in a turn with ship roll (heel) greater than 4 degrees must be approved by the carrier commanding officer or his designated representative. Anticipated wind parameters and ship's heel must be communicated to the helicopter aircraft commander prior to execution.

10. Departing or approaching helicopters shall never be flown over another aircraft.

CAUTION

The combination of relative winds and rotor downwash when launching or landing a helicopter immediately adjacent to a spot occupied by a helicopter engaging/disengaging rotors, or occupied by a shutdown helicopter not folded or secured by rotor blade tiedowns, may cause rotor system damage to the engaging/disengaging or shutdown helicopter.

11. Only spots that afford visual reference to the deck shall be used for night helicopter launches.

12. Helicopter shall not be landed or launched where their engine performances or stability could be affected by turning jet engines. Jet exhaust shall not be directed into the path of the aircraft being launched.

WARNING

- In crosswind conditions relative to the axial deck, the indicated winds often vary from those winds actually experienced at flight deck level. Jet exhaust/prop turbulence can adversely affect flight deck level winds. These variables can affect velocity, turbulence, and direction of actual winds that are critical to safe launch of aircraft and shall be considered prior to granting takeoff clearances.
- Jet exhaust from jet engines being tested in the AIMD Engine Test Cell beneath Spot 9 is sufficient to alter helicopter performance characteristics. Helicopters shall not be launched or recovered on Spot 9 during engine test runs.

13. The area in front of helicopters with forward firing ordnance shall be clear of personnel and equipment. If the CV Commanding Officer deems it necessary, helicopters loaded with forward firing ordnance are authorized to utilize spot 7. The helicopter shall be offset to starboard when spotted for launch and when landing. Helicopters with hung/misfired forward firing ordnance shall not launch/recover on spot 7.

Note

Night / IMC operations to spot 7 with forward firing ordnance should be avoided.

14. Personnel shall not be permitted to enter rotor arc area of an engaged helicopter on Spot 7 when fixed wing aircraft are in tension on Catapults 3 or 4.
15. Helicopter operations on Spot 8 shall not be conducted when fixed wing aircraft are in tension on Catapults 3 or 4.
16. Spot 2 starboard approaches and departures are prohibited.
17. Hot refueling operations shall not be conducted on Spot 8.
18. Helicopter operations shall not be conducted on Spot 8 when fixed wing aircraft recoveries are taking place.
19. The LSO platform shall be lowered and clear of personnel for helicopter takeoffs and landings on Spot 8.
20. Safety boundaries around Spots 7 and 8 shall be clear of unnecessary personnel and equipment when helicopter operations are being conducted.
21. For all helicopter operations on Spots 7 and 8, the Aircraft Handling Officer or his representative shall ensure that the aircraft elevator has been secured in accordance with EOSS short term secure procedures, stanchions lowered and locks properly engaged.
22. Left seat slide-in visual recoveries to Spot 2 are not recommended.
23. Left seat slide-in visual recoveries to Spot 3 are prohibited.

WARNING

Left seat helicopter recoveries to spots 4, 5, and 6 while there is a turning helicopter on the next forward spot represents an increased risk to the LSE. The LSE should be positioned inboard of the catapult four safe parking line in the same general location as right seat recoveries.

24. Cross cockpit recoveries forward of an occupied spot are not recommended.
25. Concurrent operations involving fixed wing aircraft and H-60B/F/H/S/R helicopters are authorized for Precision H-60 Spots 2 and 7 (Appendix B). Concurrent operations include H-60 ground turns, takeoffs and/or landings during fixed wing flight operations. Helicopter takeoffs and landings shall be sequenced between fixed wing takeoffs and landings with clearance from the Air Officer and the wind within the limits listed in Appendix C.

WARNING

Failing to properly secure the elevator can result in the elevator dropping or settling to below the level of the flight deck.

26. If any Spot 1 through 6 is occupied by an H-46, H-47, H-53, or V-22, the spots immediately forward and aft shall remain vacant.

WARNING

Inverted “T” helicopter and tiltrotor aircraft Spots 2 through 6 do not provide adequate clearance for all combinations of helicopters.

27. Case III unaided helicopter recoveries shall be conducted to the angled deck, from astern, utilizing the OLS, with the wind oriented to the centerline of the angle deck, and within the parameters set forth in the respective aircraft NATOPS flight manual. During night VMC recoveries on CVs equipped with operating white floodlights and when the after portion of the flight deck is not clear, helicopters may make an approach

utilizing the OLS and centerline of the angle deck. Upon approaching the fantail and when the deck and LSE have been visually acquired, the helicopter shall then slide over, fly up the port side to the landing spot, and slide into a landing.

Helicopters shall not cross within 5 nm of a ship's bow and within 3 nm of a ship's stern without specific approval of the air officer. A vertical replenishment helicopter may request and be granted continuous use of an established flightpath.

For CVN 78 the Dual Band Radar (DBR) presents a Hazard of Electromagnetic Radiation to Personnel (HERP) when radiating. Airborne personnel within a 450 foot radius of the ships island are limited as follows:

1. No HERP restrictions for rotary-wing aircraft operations forward and inclusive of spot three.
2. Operations forward of the island and within a 450 foot radius (including spots 4-6), at altitudes greater than 24 feet above flight deck (RADALT), shall not exceed 180 seconds.
3. Operations aft or adjacent to the island and within a 450 foot radius (including spots 7-9), at altitudes greater than 32 feet above flight deck (RADALT), shall not exceed 80 seconds.
4. Centerline recovery operations that transition from aft to forward of the island shall not exceed 80 seconds when above 24 feet above flight deck (RADALT).
5. If additional flight time is required beyond what is allowed per (2), (3), and (4) the aircraft shall wave off and remain at least 450 ft from the island for a minimum of 280 seconds.
6. VERTREO, high hover FCF check procedures, emergency procedures, and any other operations within 450 feet of the island that exceed the time and altitude limitations require the ship to establish DBR no-radiate sectors.

8.7 HELICOPTER CARRIER QUALIFICATION LANDINGS

When feasible, two landing spots will be utilized for CARQUAL landings. The pattern shall be a left-hand racetrack on the port side of the ship. Pattern spacing shall be adjusted to permit one aircraft to be launched prior to another being landed.

Night CARQUALs shall be under CATCC control. Advisory control may be specified by the ship's commanding officer when weather permits.

The pilot in the right seat shall be in control of the aircraft unless the tower is informed to the contrary. When changing pilots, the aircraft will be chocked and have initial tiedowns attached.

8.8 NIGHT OPERATIONS

8.8.1 CVN Lighting for Helicopter NVD Operations

Figure 8-6. Recommended Deck Lighting Configuration for Helicopter NVD Aided Takeoff/Landing

Blue Deck Lights	ON
Overhead Sodium Oxide (SOX) Light	ON
Beacon Lights	ON
PLAT IR Flood	OFF
Red Deck Status Lights	OFF
Centerline Lights	OFF
Landing Area Lights	OFF
Drop Lights	OFF

Figure 8-6. Recommended Deck Lighting Configuration for Helicopter NVD Aided Takeoff/Landing (cont.)

IFLOLS/MOVLAS	OFF
CSV Lights	OFF
White Bow Combing Lights	OFF
Note SOX lights cause minimal NVD blooming and negate the need for a qualified NVD-LSE while providing ample lighting for flight deck crews.	

8.8.2 NVD Aided Approaches

Night Vision Device (NVD) takeoffs should be the standard departure method at night. Unaided departures should be reported to the air officer/HCO if lighting adjustments are required.

Crews aided with NVDs may make a visual approach to a spot rather than a Carrier Controlled Approach (CCA) provided such an approach is coordinated with the air officer/PriFly, are not IMC, and have sufficient illumination/visibility.

NVD Centerline Visual Approach. During VMC and using NVDs, the HAC may accept a visual approach to the fantail and proceed along the centerline for landing on the designated spot. After the last fixed wing aircraft on final is identified by the air officer/CATCC, the helicopter will take interval and land visually.

NVD Slide-in Visual Approach. At the HAC's discretion, the helicopter may slide in to a landing on the designated spot. Visual contact with the ship and NVD usage is required.

8.8.3 Night EMCON Procedures

Helicopters approaching the carrier for landing shall enter the proper holding pattern. EMCON recovery procedures shall be addressed by the Air Wing TACSOP in a manner that allows for deconfliction in the event of multiple helicopters recovering in a restricted communication environment. The pattern will have to be flown visually by making estimates on the 45 degree and the 110 degree relative bearings. Caution must be exercised not to drift aft of the 110 degree relative bearing. Altitude, airspeed, and spacing restrictions remain the same as night/VMC (at least 3,000/5). Upon entering the pattern, the helicopter will switch navigation lights to FLASHING/BRIGHT. After the last fixed-wing aircraft has turned final or when given a green light or Charlie signal (see Figure 3-2 of Aircraft Signals NATOPS Manual [NAVAIR 00-80T-113]), the helicopter leader shall accelerate to 90 knots and at the right-hand abeam position turn to intercept the optical glideslope at 1 nm and 400 feet. At the 45 degree position, the lead helicopter will receive a green light from the tower if cleared for the approach. When cleared, the pilot will then switch navigation lights to STEADY/DIM. If there is more than one helicopter airborne, they will all perform the same procedures as they pass through each checkpoint. If, when passing through the 45 degree position, a red light is received (Delta), then that helicopter and all following will wave off to the right, reentering starboard holding.

8.9 ARMAMENT

8.9.1 Dearming

Helicopters carrying forward-firing ordnance shall land canted outboard and be pointed clear of aircraft, personnel, and equipment during the dearming process.

If more than one H-60 is to be dearmed with forward firing ordnance, the second aircraft will not be permitted to land until the first aircraft has been dearmed.

Note

Flight deck helo Spot 4 will be the primary dearming area followed by spot 3, 5, and 6 in order.

8.9.2 Hung Ordnance

In the event of hung ordnance, including crew served weapons and forward-firing ordnance, the crew shall notify tower. Include type, number of rounds and nature of the malfunction. The following steps shall be completed as applicable:

1. Train crew served weapon or forward-firing ordnance away from the ship and personnel. Positive control of weapon shall be maintained at all times.
2. In the event of hung ordnance, the bridge and other appropriate stations shall be notified and the appropriate Hazards of Electromagnetic Radiation to Ordnance (HERO) condition shall be set.
3. Helicopters with hung ordnance in crew served weapons on the starboard side should land on Spot 7 or 9. If recovering on Spot 9, helicopters shall land with a heading of BRC +15 degrees, with the weapon trained in a safe direction aft of the ship.
4. Helicopters with hung/misfired forward firing ordnance shall not launch/recover on Spot 7.
5. Explosive Ordnance Disposal (EOD)/de-arming crews shall be on station prior to recovery.
6. All flight deck personnel, including LSEs, shall remain clear of the line of fire and/or danger area of an aircraft landing with hung ordnance. Only minimum required personnel shall remain in the vicinity of the landing area.
7. The weapon shall be removed upon direction of EOD or ship's weapons personnel.

8.9.3 Hung Dome

In the event of a hung dome, it is assumed the crew has exhausted all means of recovering the dome and all emergency procedures have been completed per the respective NATOPS Flight manual. The following considerations/procedures apply:

1. The air officer shall clear all personnel away from the spot on which the dome is to be recovered (Spot 9 recommended) with the exception of the minimum number of maintenance personnel required (approximately four).
2. Consideration should be given to securing a mattress or padding to the deck either on or adjacent to the landing spot (Payed Out Cable Length (POCL) dependent) with tie down straps to provide a cushion onto which the dome can be lowered to minimize damage.
3. The aircraft will hover at an appropriate altitude to facilitate recovery. Maximum safe altitude will depend on POCL and environmental considerations. Consideration should be given to placing the LSE in Vultures Row to provide signals for placing the dome on the deck.
4. Conditions will dictate whether the cable will be sheared or the dome lowered to the deck. If lowered to the deck and sufficient POCL exists to allow maintenance personnel to disconnect the dome, they shall ensure the dome is grounded to prevent electrical shock and will then disconnect the transducer assembly (dome) from the cable. After the dome is detached, the aircraft will begin a descent and cable shall be walked with two person integrity away from the landing spot. If there is insufficient POCL to allow maintainers to safely work under the aircraft, the crew may opt to lower the dome onto the padding and then slide over to land. If at any time, a stable hover cannot be maintained during or after disconnecting the transducer assembly and/or during the descent, the crew shall execute the appropriate Emergency Procedure to facilitate safe recovery.
5. After landing and placement of chocks and chains, the cable should be placed in the aircraft cabin prior to aircraft shutdown.

8.10 LOGISTICS

8.10.1 Aircraft Configuration

The presence of personal weapons, crew served weapons, fixed forward firing weapons, torpedoes, CATMs, DATMs or expendables should not prevent an otherwise capable helicopter from being tasked with logistics or passenger transfers.

Note

A GAU-21 installed in a MH-60R presents an egress hazard. MH-60Rs in this configuration shall remove the GAU-21 and swing arm before transporting passengers.

8.10.2 External Cargo Limitations

The maximum VERTREP load for the MH-60S and MH-60R is 6,000 pounds. This limit is set by the external cargo hook capacity. The maximum VERTREP load will be further limited by the number/capacity of available pendants, aircraft gross weight (fuel load, passengers, internal cargo), density altitude, and temperature.

CHAPTER 9

Tiltrotor Procedures

9.1 GROUND OPERATIONS

9.1.1 Starting Engines

1. Engine start up and shutdown wind limits are 45 kts; the Air Officer, Helicopter Control Officer (HCO), or Helicopter Engaged Turn Officer (HETO) should be prepared for proprotors to engage during engine start. The V-22 does not utilize the rotor break during engine start.

CAUTION

The aircraft may shift during wing stow/unstow operations. Ensure all tiedown chains are installed with sufficient slack to allow aircraft to shift during wing movement. Damage to the aircraft tiedown fittings may occur.

2. The Auxiliary Power Unit (APU) may be started upon approval from the Air Officer, Aircraft Handling Officer, HCO or HETO. APU exhaust gases are ducted upward and outward from aircraft midwing area and will not damage other aircraft.
3. LSE shall ensure tiedown chains are slack prior to engagement of proprotors.

WARNING

Failure to slack tiedown chains prior to engagement of the proprotors will result in a pilot induced roll oscillation.

9.1.2 LSE Calls

The LSE shall request permission for the following evolutions through PriFly: engine start/rotor engagement and to “break”, “hold” and “lift”.

9.1.3 Functional Check Flights

Tiltrotor Functional Check Flights (FCFs) often require numerous ground turns and flight evolutions to perform vibration analysis and/or leak checks. FCF flights can be conducted concurrently with fixed-wing operations.

9.2 LAUNCH/DEPARTURE

Tiltrotor aircraft shall comply with fixed wing procedures and be treated procedurally as such or as specified in this chapter. Doctrinally, they will remain in airplane mode until the final phases of landing. Airplane mode and procedures enhance survivability, fuel efficiency, and long term health of the aircraft. Any requirement to fly helicopter procedures must be specifically requested by the Air Officer or the Tiltrotor Aircraft Commander.

Tiltrotor Launch/Recovery Deck Spots on CVN type ships are specified in Appendix B. Tiltrotor launching/recovery wind envelopes for the various deck spots are contained in Appendix C .

9.2.1 Weather

CVN launch weather minimums are 200-1/2.

9.2.2 Launch Procedures

Tiltrotor start and spread sequence, rotor engagement, and launch shall be in accordance with appropriate aircraft NATOPS procedures and shall only occur after the proper signal from a qualified LSE and under positive control of PriFly.

All V-22 vertical launch/recovery operations shall occur from Inboard Spot 6 (landing area centerline) or Inboard Spot 9, as denoted in Appendix B of this manual.

WARNING

- Rotor down wash created by the V-22 is greater than that produced by other embarked helicopters, especially when both rotors are over the flight deck. This down wash is sufficient to damage unsecured rotor blades and to blow aircraft chocks, tiedown chains, and towbars about the deck or overboard, and cause possible personnel injury or death.
- V-22 launch and recovery operations one (1) spot behind any unsecured light to medium lift tail rotor helicopter (H-1, H-60) may cause uncommanded yaw of the forward helicopter due to proprotor downwash resulting in possible aircraft damage and/or personnel injury or death.

Note

- During EMCON, concurrent operations may lead to misinterpretation of the rotating beacon signals.
- To reduce UHF transmissions during EMCON, rotary beacon signals for helicopter operations are found in Figure 3-1 of the Aircraft Signals NATOPS Manual (NAVAIR 00-80T-113).

For all launches, the air officer shall ensure the relative wind is within the envelope prescribed in the applicable NATOPS flight manual. For all launches, the nose of the V-22 shall be aligned with the angled deck center-line and within the visual parameters established in the respective aircraft NATOPS flight manual. Before launch, with the ship steady on launch course, PriFly will order tiedowns removed. The LSE shall then signal for removal of the tiedowns, ensuring the pilot sees the signal. Tiedowns shall not be removed from a V-22 aircraft until the pilot has signified he is ready to launch and the LSE has received permission from PriFly.

After removing tiedowns and chocks, plane captains or plane handlers shall hold the tiedowns up for the pilot and LSE to see and then clear the area. As tiedowns are being removed, PriFly shall broadcast the relative wind direction and velocity and then activate the appropriate rotating beacon signals (see Figure 3-1 of Aircraft Signals NATOPS Manual [NAVAIR 00-80T-113]). Before launching a V-22 aircraft, the LSE shall ensure the following:

1. All tiedowns have been removed.
2. The area affected by the V-22 aircraft downwash is clear and the area over which the V-22 aircraft will pass is clear.
3. Airborne aircraft are well clear. The pilot shall not commence takeoff until he has received the launch signal from the LSE and acknowledged with salute during day operations and position lights to steady dim at night.
4. Confirm launching signal/approval from PriFly.
5. Required hover tests following maintenance may require extra clearance area for maneuvering.

9.2.3 Departure Procedures

9.2.3.1 Vertical Takeoff

1. Aircraft shall not take off until cleared by PriFly and a signal has been received from the LSE.

2. Takeoffs should be to a hover to check power and instruments before continuing the takeoff to clear the ship.
3. Stern departures are prohibited for tiltrotor aircraft.
4. Flight over the IFLOLS is prohibited.

9.2.3.2 Short Takeoff

Short Takeoff from inboard Spot 6 is the primary launch method.

STO's aboard CVN type ships may be authorized by the Air Officer from Inboard Spot 6 only. STO's from Spot 9 are prohibited.

Aircraft that depart via STO may not have the power to conduct a rapid recovery via vertical landing. PriFly should be prepared to initiate an emergency pull forward to clear the landing area expeditiously for emergency landing.

In preparation for a STO launch, the pilot will lower nacelles to STO position and wait for the launch signal from the LSE.

9.2.3.3 Case I Departure

This departure may be utilized when it is anticipated that flights will not encounter instrument conditions during departures with weather conditions no lower than 3,000 feet and 5 nm visibility.

Passing 200 feet, turn to parallel the BRC at 500 feet until 7 nm. Aircraft are then cleared to climb unrestricted in visual conditions. Transition to airplane mode should be conducted as soon as practicable.

Note

Deviation from standard departure profile may be permitted with the approval of the Air Officer

Stern departures are prohibited for tiltrotor aircraft. Flight over the IFLOLS is prohibited.

9.2.3.4 Case II Departure

For departure, visual conditions at the ship may exist down to a ceiling of 1,000 feet and visibility of 5 miles. Launch shall be on departure control frequency.

Tiltrotor aircraft will depart straight ahead and parallel BRC unless otherwise directed and maintain 500 feet and 240 knots until 12 nm.

Note

Deviation from standard departure profile may be permitted with the approval of the Air Officer and CATCC.

9.2.3.5 Case III Departure

This departure shall be used whenever existing weather at the ship is below Case II departure minimums and during all night operations except as modified by the OTC or Commanding Officer. The launch shall be on departure control frequency. Fixed-wing aircraft shall not be launched until V-22 is at 240 knots or at least 120 seconds upwind.

Note

All V-22 autopilot features may not be fully functional above 240 knots.

Climb straight ahead to 1,000 feet, accelerating to 240 knots after level-off. Transition to airplane mode should be conducted as soon as practicable.

Note

COD aircraft shall depart straight ahead unless otherwise directed and maintain 1,000 feet until 12 nm.

9.2.4 Lost Communications

Figure 9-1 and Figure 9-2 provide visual signals to be used in the event of lost communications between aircraft and ship.

Figure 9-1. Emergency Signals from Tiltrotor to Ship with Radio Failure

FROM AIRCRAFT TO SHIP	
PILOT'S DESIRES OR INTENTIONS	**SIGNAL**
1. I require immediate landing.	Fly by or hover close aboard starboard quarter, remaining clear of other traffic, with gear DOWN, floodlight/landing light ON, and ramp DOWN.
2. I desire to land but can wait for the next recovery or scheduled recovery time.	Fly by or hover on the starboard side, low and close aboard with navigation lights BRIGHT and FLASHING and anticollision lights ON.
3. I am proceeding to the divert field.	Fly up the starboard side of the ship, rocking wings with landing gear UP, navigation lights BRIGHT and STEADY and anticollision lights ON. If fuel state and the nature of the emergency permit, continue making passes until joined by a wingman. Upon reaching divert fuel state proceed alone, setting IFF to emergency when departing.
Note At night, aircraft flying close aboard the port side of the ship without lights are considered to have an emergency requiring immediate landing.	

Figure 9-2. Emergency Signals from Ship to Tiltrotor with Radio Failure

FROM SHIP TO AIRCRAFT			
COMMAND/ADVISORY	**SIGNAL**		
	OLS	**Aldis Lamp**	**Blinker**
1. (1) Bingo — Proceed to alternate landing field.	Flashing cut and waveoff lights.	Flashing Red light.	M, M — —, — —
2. Add power — (Jets and turboprops only).	Flash cut lights.	N/A	N/A
3. Cleared to enter CHARLIE pattern.	N/A	Flashing Green	N/A
4. CHARLIE — Cleared to land aboard.	N/A	Steady Green light	C —— • —— •
5. DELTA — Delay in landing. Enter DELTA pattern and maintain visual contact with the ship.	Flashing landing area lights.	Steady Red light	D —— ••
6. Closed deck. Do not land.	Landing area lights off (night only).	N/A	N/A

Figure 9-2. Emergency Signals from Ship to Tiltrotor with Radio Failure (cont.)

FROM SHIP TO AIRCRAFT			
COMMAND/ADVISORY	SIGNAL		
	OLS	Aldis Lamp	Blinker
7. Do not land. Ditch or bail out/eject in the vicinity of the ship.	N/A	Z — — ••	Z — — ••
8. LSO has control of the air craft on final approach at approximately 1-1/2 miles.	Steady (3 seconds) cut lights.	N/A	N/A
9. Lower wheels.	N/A	W • — —	W • — —
10. Lower flaps.	N/A	F •• — •	F •• — •
11. Jettison disposable fuel tank.	N/A	G — — •	G — — •
12. Jettison ordnance.	N/A	Q — — • —	Q — — • —
(1) Signal is given only when ordered by the air officer.			

9.3 RECOVERY

Tiltrotors shall comply with fixed wing procedures and be treated procedurally as such or as specified in this chapter. Doctrinally, they will remain in airplane mode until the final phases of landing. Airplane mode and procedures enhance survivability, fuel efficiency, and long term health of the aircraft. Any requirement to fly helicopter procedures must be specifically requested by the Air Officer or the Tiltrotor Aircraft Commander.

The primary method of recovery is a stern approach to Inboard Spot 9. In the event of a section or division recovery, the lead and dash two aircraft shall be taxied forward of the one wire prior to the recovery of subsequent tiltrotor aircraft. This mitigates unnecessary exposure to downwash and improves handling characteristics.

9.3.1 Arrival Procedures

Arrival procedures shall be in accordance with fixed-wing procedures, Paragraph 6.1.

9.3.2 Case I

Note

Case I/II recoveries shall not be conducted concurrently with Case III departures.

This approach may be utilized when it can be anticipated that flights will not encounter instrument conditions at any time during the descent and final approach. A ceiling of 3,000 feet and 5 miles visibility within the carrier control zone is required. The flight leader retains full responsibility for proper navigation and separation from other aircraft. All returning flights will check in with marshal control when entering the carrier control area or as soon as they are released by another controlling agency. Marshal control shall acknowledge the check-in and provide the following information:

1. Case recovery.
2. Expected BRC.

3. Altimeter

4. Expected “Charlie” time (if other than briefed).

Aircraft shall normally be switched to tower control at 10 nm after reporting the ship in sight (“see you”).

9.3.2.1 Tiltrotor Holding

The tiltrotor airplane holding mode pattern is identical to Jet/Turboprop aircraft port holding and described in Paragraph 6.2.1. Tiltrotor holding altitude will be at the discretion of the Air Officer. Typically V-22 aircraft are recovered after the fixed-wing recovery is complete, thereby requiring holding at the top of the stack. Ideally the V-22 holding altitude is co-located with aircraft that have similar holding airspeeds (e.g., E-2C/D) or above the tanker altitude. V-22 holding should not exceed 10,000 feet MSL if carrying passengers. The Air Officer shall assign 1200 feet if recovering outside fixed-wing flight ops or if operational necessity dictates landing the V-22 immediately prior to fixed-wing recovery. CVW SOPs should depict assigned holding altitudes for aircrew situational awareness.

Tiltrotor aircraft holding at 1,200 feet should expect a “Charlie” call from the Air Officer. Tiltrotor aircraft holding at the top of the stack should descend in port holding (collapse the stack) when their interval has vacated the next lower altitude. Recovery order is by overhead stack altitude, or as directed. Tiltrotor aircraft shall maintain the prescribed separation in port holding pattern and throughout the descent. Once at 2,000 feet, tiltrotor aircraft should maintain 2,000 feet until the last fixed wing aircraft is in the CASE I pattern, at which point they will proceed to the initial and take appropriate interval, unless told to expect a manual Charlie from the Air Officer, as established by air wing SOP.

9.3.2.2 VFR Day Tiltrotor Carrier Landing Pattern

When ready, the Air Officer shall ”Charlie” tiltrotor aircraft with expected landing spot. Tiltrotor aircraft shall overfly the ship at last assigned altitude and in airplane mode. Once clear of the bow, and with sufficient interval, tiltrotor aircraft shall enter the break to downwind heading. Transition to conversion mode is at the discretion of the pilot in command. Distance abeam the ship should be between 1 and 2 nm. Air Officer shall respond with relative winds and clearance to land on assigned landing spot.

Entry into the case I/II pattern shall be executed as described in Paragraph 6.2.3.1

The landing pattern depicted in Figure 9-3 is used by tiltrotor aircraft during day VFR (Case I/II) operations. The purpose of day case I/II operations is to allow for a primarily pilot controlled pattern and reduce total recovery time compared to case III operations.

The landing pattern downwind leg is flown at 600 feet, 1-2.0 nm abeam the ship. Aircraft should maintain a minimum of 170 kts in the landing pattern until approaching the ship's bow. At the bow tiltrotor aircraft should beep and begin their approach turn at the crotch. Upon commencing the approach turn, the aircraft should begin a gradual descent to pass the 90 position at 400 to 450 feet on the RADALT and approximately 120 KCAS. The pilot should continue the approach turn until intercepting the extended centerline at .8-1.0 miles, approximately 120 KCAS, and 250-300 feet on the RADALT. Upon rolling wings level pilot should intercept a linear plus ten profile.

For the CQ pattern tiltrotor aircraft should begin their crosswind turn with nacelles on the down stops between .7 and 1.0 upwind or with appropriate interval.

9.3.2.3 Waveoffs

Tiltrotor aircraft shall be prepared to be waved off at any time during the approach. Waveoff may be directed from the Air Officer, LSE or at the discretion of the pilot in command. Wave-off up the LA is preferred unless directed otherwise. Upon wave off, tiltrotor aircraft shall enter the case I pattern or bolter/waveoff pattern as appropriate, and transition to airplane mode as soon as practical.

Note

The primary wave off is up the Landing Area for increased aircraft handling characteristics and safety. If unable due to equipment, personnel, or aircraft the tiltrotor should be informed "Landing Area unavailable for wave off" with the Charlie call.

9.3.3 Case II

This approach shall be utilized when weather conditions are such that the flight may encounter instrument conditions during the descent, but visual conditions of at least 1,000 feet and 5 miles visibility exist at the ship. Positive control shall be utilized until the pilot is inside 10 nm and reports the ship in sight. During Case II recoveries, CATCC shall be manned and prepared to assume control of a Case III recovery in the event weather conditions deteriorate.

Tiltrotor aircraft shall follow Case III approach procedures outside of 10 nm. When within 10 nm with the ship not in sight the flight may descend to not less than 800 feet. Fly up the starboard side of the ship at 800 feet then enter the break and follow the Case I procedures. If the ship is not in sight at 5 nm, the tiltrotor shall be vectored to the bolter/waveoff pattern and action taken to conduct a Case III recovery.

Note

Case II recoveries with tiltrotor and fixed-wing aircraft are a complex and dynamic event. The Air Officer shall maintain positive control and situational awareness of all aircraft in the carrier control zone. The Air Officer shall anticipate conflicts and take positive action to avoid and/or resolve conflicts.

Figure 9-3. VFR Day Tiltrotor Carrier Landing Pattern

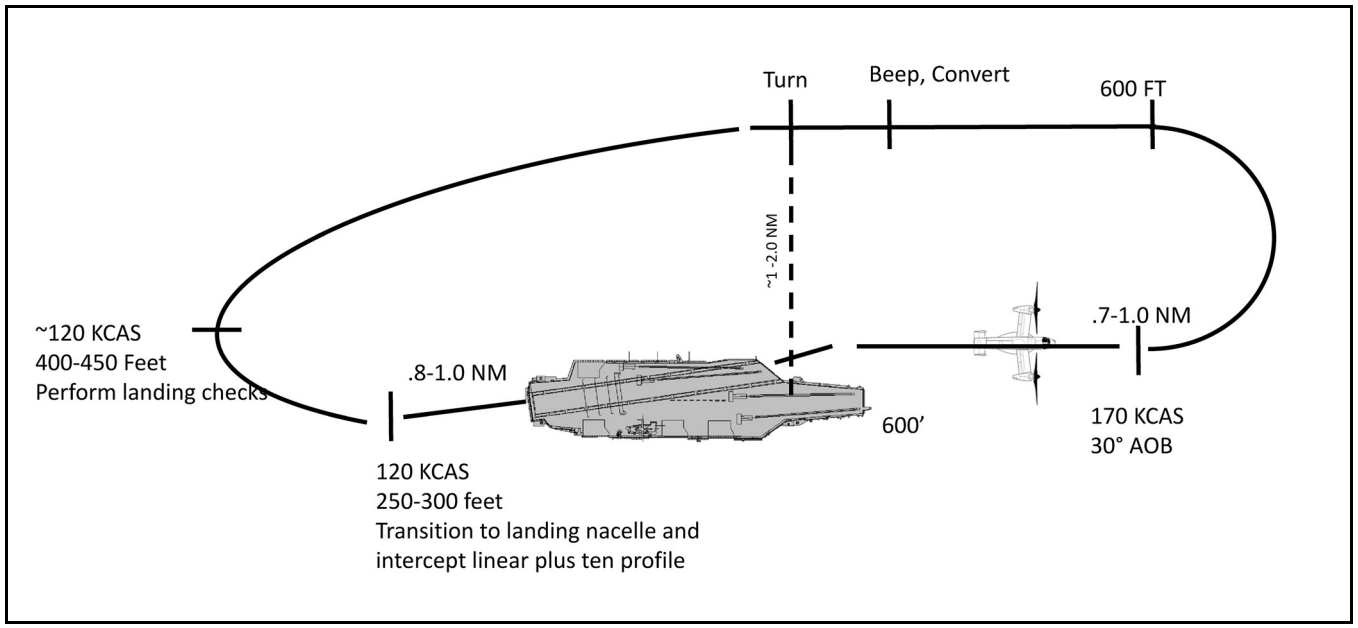

9.3.4 Case III

This approach shall be utilized whenever existing weather at the ship is below Case II minimums and during all night flight operations conducted between one-half hour after sunset and one-half hour before sunrise except as modified by the OTC or carrier commanding officer. Night/IMC Case III recoveries shall be made with single aircraft. Section approaches will be approved only when an emergency situation exists.

Note

Case III recoveries may be conducted concurrently with Case I and II launches.

9.3.4.1 Marshal Procedures

Note

Advisory control is provided by marshal from check-in until the aircraft is advised of "radar contact" which indicates positive control.

Tiltrotor aircraft shall marshal in accordance with jet/turboprop aircraft procedures (Paragraph 6.4.1.1) with the following exceptions. During case II/III operations tiltrotor aircraft shall recover last and hold on a dedicated tiltrotor radial at 5,000 feet or as required but not above 10,000' MSL for passenger considerations. The secondary method, if required for air and sea space considerations, will be overhead of the CVN as directed by CATCC, the tiltrotor can expect vectors to final. Consideration should be given to allow the tiltrotor aircraft the lowest holding angels to allow for greater passenger comfort with descents in an unpressurized aircraft, minimizing icing exposure, and increasing safety when coupled to the flight director panel (limited to 2000 FPM descent rate).

Note

Due to lack of cabin pressurization, tiltrotor aircraft should not marshal above 10,000 ft. CATCC should plan to assign an alternate marshal radial for tiltrotor aircraft when five or more fixed-wing aircraft are in marshal.

9.3.4.2 Overhead Marshal

As an alternative to normal marshal procedures, overhead marshal may be utilized as geographical or operational circumstances necessitate. The assigned inbound magnetic heading to the holding fix should coincide with the outbound magnetic radial of the approach.

Note

- Tiltrotor aircraft shall be assigned a discrete holding altitude de-conflicted from other overhead aircraft (i.e., recovery tankers, rendezvous altitudes and mission tanker altitudes.
- Overhead holding may be utilized in order to avoid unnecessary delays in recovering tiltrotor aircraft.

9.3.4.3 Marshal Airspeed

Tiltrotor aircraft should hold in airplane mode and at airspeeds in accordance with applicable aircraft NATOPS flight manual.

9.3.4.4 Marshal Instructions

Marshal control shall ensure the following information has been provided to each aircraft prior to entering marshal:

1. Case Recovery.
2. Type Approach.
3. Expected final bearing.
4. Altimeter.
5. Marshal holding instructions.
6. Expected approach time.
7. Expected approach button.
8. Time check.

9. Vector to marshal (if required).
10. Multiple marshal stack information (radials/altitudes).

9.3.4.5 General Instructions

Identical to fixed-wing instructions (Paragraph 6.4.3).

9.3.4.6 Departing Marshal and Landing

Tiltrotor aircraft shall adjust holding pattern to depart marshal at the assigned Expected Approach Time (EAT). Early or late departure shall be reported to marshal control immediately so that control adjustments can be accomplished if required. Tiltrotor aircraft shall commence and fly the assigned approach in accordance with procedures outlined in Figures 6-2 to 6-5. Once established on final bearing, maintain 240 kts until 6 nm. Air Officer shall report relative winds and clear the tiltrotor to land on an assigned spot via straight in or side step.

Tiltrotor aircraft waved off shall transition to airplane mode at pilot discretion and enter the standard bolter/waveoff pattern.

WARNING

- Rotor downwash is sufficient to damage unsecured rotor blades and to blow aircraft chocks, tiedown chains, and towbars about the deck or overboard, and cause possible personnel injury or death.
- V-22 launch and recovery operations 1 spot behind any unsecured light to medium lift tail rotor helicopter (H–1, H-60) may cause uncommanded yaw of the forward helicopter due to proprotor downwash resulting in possible aircraft damage and/or personnel injury or death.

Note

- Tiltrotor aircraft should normally land after fixed-wing recovery is complete. When operational necessity dictates, tiltrotor aircraft may land before fixed-wing recovery begins. Fixed-wing aircraft should not be vectored to final behind tiltrotor aircraft due to airspeed differences on final approach.
- Expect tiltrotor aircraft to land aided. Flight deck lighting should be adjusted as appropriate.
- Rotor down wash created by the V-22 is greater than that produced by other embarked helicopters, especially when both rotors are over the flight deck.

When the word is passed to stand by to recover V-22 aircraft, the LSE shall take a position clearly visible to the pilot.

Except for the “waveoff” and “hold” signals, the LSE signals will be accepted as advisory and the pilot has full responsibility for the proper and safe operation of the aircraft. When V-22s are recovered immediately ahead of fixed-wing aircraft, pilots shall shutdown/disengage as expeditiously as feasible. They shall remain in their aircraft until towed clear of the fixed-wing landing area. The appropriate amber or red beacon shall be ON whenever rotors are engaged on deck.

9.3.5 Approach Weather Minimums

Figure 6-5 contains approach weather minimums for tiltrotors.

9.3.6 Nonprecision Approach

When precision approach radar or suitable visual landing aids are not available, tiltrotor aircraft on final approach should continue descent to 300 feet after passing the 3 nm fix. The final controller will provide sufficient information in order for the pilot to maintain an accurate azimuth and altitude profile until reaching nonprecision minimums.

9.3.7 Waveoff

Continue climb straight ahead on the extended final bearing to an altitude of 1,200 feet and await instructions from approach control.

If no instructions are received within 2 minutes or prior to reaching 4 nm ahead of the ship, the pilot will attempt to make contact with the ship, giving identification and position. If instructions are not received, the pilot will assume communication failure and execute a turn downwind reporting downwind abeam. If radio contact is not reestablished, the pilot will proceed downwind and reenter through the 4 nm fix or turn inbound 2 minutes past abeam.

Note

The primary wave off is up the Landing Area for increased aircraft handling characteristics and safety. If unable due to equipment, personnel, or aircraft the tiltrotor should be informed "Landing Area unavailable for wave off" with the Charlie call.

Figure 9-4. CASE III/Waveoff Pattern

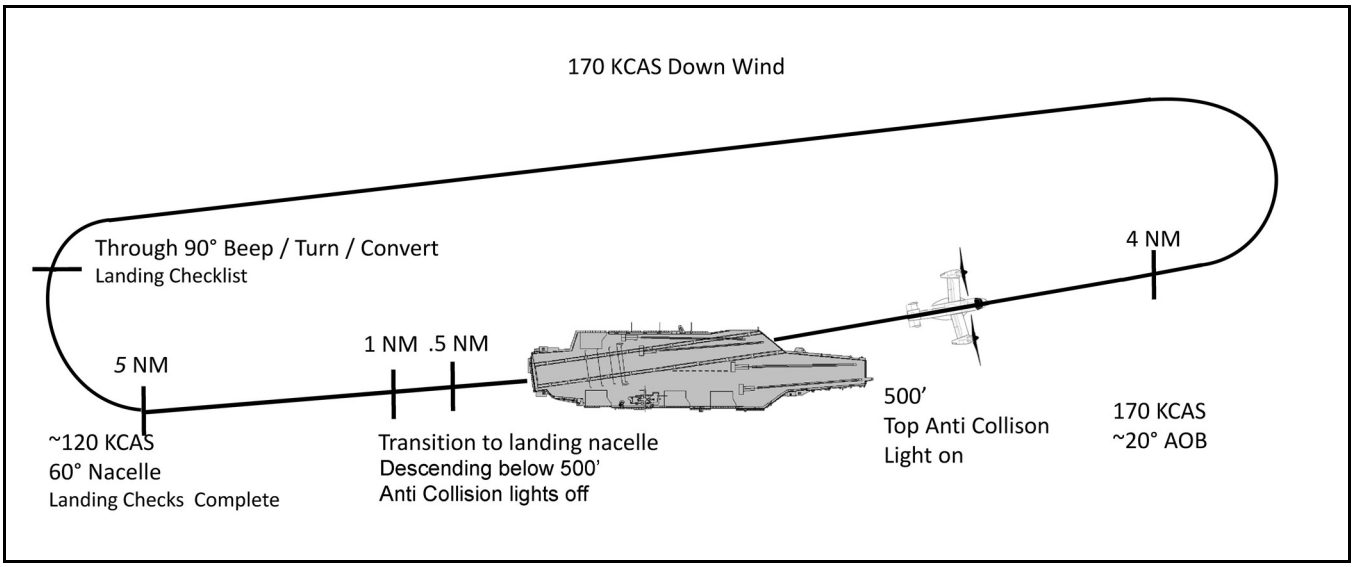

9.3.8 Instrument Emergencies

Aircraft will comply with all fixed wing procedures. If navigational equipment is available, lone aircraft will continue approach. Pilot may utilize emergency survival radio on guard (243.0) frequency if time and safe control of aircraft permit.

9.3.9 Emergency Landing

In the event of an emergency, V-22 aircraft will conduct a vertical landing to either Inboard Spot 6 or Inboard Spot 9. If unable to perform a vertical landing, the Air Officer should direct the bridge to make minimum WOD of 25 kts and clear as much deck space as possible for an emergency landing to the stern of the ship.

9.4 SAFETY PRECAUTIONS

The following safety precautions applicable to tiltrotor operations shall be observed.

1. Personnel shall not be permitted to approach or depart a V-22 while starting engines.
2. "Fast Eddy" shall be removed and the shuttle shall be full aft for short takeoff procedure.
3. For a vertical takeoff from Inboard Spot 6 the shuttle should be full forward.

4. Personnel required to be in the immediate vicinity of tiltrotors during engine start shall remain well outside the rotor area.

5. The air officer or his representative shall pass over the 5 MC, "Stand well clear of tiltrotor (side #) while engaging/disengaging rotors on spot (#)."

6. LSEs shall stand on or behind the starboard foul line and well forward of the spot, to account for extreme downwash created by proprotors.

7. Concurrent helicopter and tiltrotor takeoffs and landings are prohibited.

8. The waveoff and hold signals are mandatory and shall be executed immediately.

9. A V-22 is restricted to following the angled-deck centerline when taxiing through the arresting gear area.

10. Launch/recovery of V-22s while the ship is in a turn requires the authorization of the carrier Commanding Officer or his designated representative. Anticipated wind parameters and ship's heel shall be communicated to the tiltrotor aircraft commander prior to execution.

Note

Tiltrotor rotor engine start/shutdown and tiltrotor launch/recovery while a ship is in a turn should only be attempted when the ship has reached a steady state turn and is within published wind envelopes.

11. V-22 aircraft shall never be flown over another aircraft.

CAUTION

The combination of relative winds and rotor downwash when launching or landing a tiltrotor immediately adjacent to a spot occupied by a helicopter or tiltrotor engaging/disengaging rotors, or occupied by a shutdown helicopter/tiltrotor not folded or secured by rotor blade tiedowns, may cause rotor system damage to the engaging/disengaging or shutdown helicopter/tiltrotor.

12. V-22 recovery operations to inboard Spot 9 are authorized while LSO platform is in the raised operational position. V-22 launch operations from inboard Spot 9 with the LSO platform is in the raised operational position are authorized for a stern departure only. Personnel must be clear of LSO platform for all V-22 takeoffs and landings on Spot 9.

WARNING

- V-22 launch and recovery to Spot 6 inboard with E-2/C-2 aircraft turning in close proximity (forward and aft hummer hole) pose a danger for personnel to get blown into turning props.
- In crosswind conditions relative to the ship's centerline, the indicated winds often vary from those winds actually experienced at flight deck level. Jet exhaust/prop turbulence can adversely affect flight deck level winds. These variables can affect velocity, turbulence, and direction of actual winds that are critical to safe launch of aircraft and shall be considered prior to granting takeoff clearances.

Note

When conducting V-22 launch and recovery to Spot 9 with the LSO platform in the raised position, pay special attention to securing loose gear to include headsets, pickle switches and equipment covers.

13. V-22 aircraft shall not be landed or launched where their engine performances or stability could be affected by jet engine exhaust.

CAUTION

While launching and recovering V-22 aircraft in the vicinity of adjacent aircraft; canopies, windows and panels shall be secured to prevent damage.

14. All V-22 vertical launch/recovery operations shall occur from Inboard Spot 6 (landing area centerline) or Inboard Spot 9, as denoted in Appendix B.
15. All V-22 STO operations shall occur from Inboard Spot 6, as denoted in Appendix B.
16. A shipboard fire wand shall be present on the flight deck for V-22 operations.
17. Backwards taxi is approved on the CVN.
18. Taxi operations outside of the landing area are not recommended.
19. Inverted "T" helicopter spot 5 shall remain vacant during V-22 launch/recovery to inboard Spot 6.
20. Landing a tiltrotor on Inboard Spot 6 with a helicopter parked on Spot 5 is prohibited, however landing a helicopter on Spot 5 following a tiltrotor landing or with a tiltrotor turning on Inboard Spot 6 is allowed.
21. To prevent injury to personnel affected by V-22 rotor wash, Elevators three (3) and four (4) should be raised during V-22 launch and recovery operations to Inboard Spot 9, and Elevator 2 should be raised during V-22 launch and recovery operations to Inboard Spot 6.

WARNING

In the event it is not feasible to raise elevators, ensure personnel are clear from elevator deck edges to eliminate the potential of being blown over.

Note

While on deck with rotors turning, an upwind rotorcraft's downwash during launch or recovery can impinge upon the on-deck V-22 resulting in an uncommanded roll.

9.5 TILTROTOR CARRIER QUALIFICATION (CQ) LANDINGS

CQ requirements are promulgated in the MV-22 T&R matrix. CQs are not seat dependent (i.e., pilot qualified in left seat does not have to qualify in right seat).

Night CQs shall be under CATCC control. Advisory control may be specified by the ship's Commanding Officer when weather permits.

The pilot will notify tower which pilot at the controls; left or right seat. This is done to signal to the LSE which pilot is taking commands. When changing pilots on deck, the aircraft will be chocked and have initial tiedowns attached.

9.6 NIGHT OPERATIONS

AIRCRAFT LIGHTING			
CVN LIGHTING CONFIGURATION	**DAY**	**NIGHT**	**NIGHT DECK LOITER**
Anti-Collision	OFF	Upper Only (off below 500')	OFF
Position Lights – Nacelle Only (Back Off)	OFF	Steady Dim when ready to launch	Flashing Dim
Proprotor Lights	OFF	Auto (10)	Auto

9.6.1 CVN Lighting for Tiltrotor NVD Operations

Figure 9-5. Recommended Deck Lighting Configuration for Tiltrotor NVD Aided Takeoff/Landing

Blue Deck Lights	ON
Overhead Sodium Oxide (SOX) Light	ON
Beacon Lights	ON
PLAT IR Flood	OFF
Red Deck Status Lights	OFF
Centerline Lights	ON
Landing Area Lights	ON
Drop Lights	ON
IFLOLS/MOVLAS	OFF
CSV Lights	OFF
White Bow Combing Lights	OFF
Laser Line Up	ON

Note

- Light settings should be set to lowest intensity.
- Laser line up is useful on final from longer distances and when viewed under NVGs.
- SOX lights cause minimal NVD blooming and negate the need for a qualified NVD-LSE while providing ample lighting for flight deck crews.
- Night NVD flight operations may result in degraded visual cues due to Ship NVD compatibility issues.

9.6.2 NVD Aided Approaches/Departures

Night Vision Device (NVD) aided approach/departure should be the standard method at night.

Note

NVD flight operations may result in degraded visual cues due to ship NVD compatibility issues.

9.6.3 Night EMCON Procedures

Aircraft shall comply with all fixed-wing procedures.

9.7 LOGISTICS

9.7.1 Aircraft Configuration

The presence of personal weapons, crew served weapons, or expendables should not prevent an otherwise capable tiltrotor from being tasked with logistics or passenger transfers.

Mission priority, mutual support, distances, light conditions, weather, sea state, temperature, SAR capabilities as well as ship to shore based NAVAIDS, communications and radar shall be considered. The authorizing authority and risk mitigation for all MV-22 over-water operations lies with the squadron Commanding Officer.

9.7.2 External Cargo Limitations

The maximum VERTREP load is 12,500 lbs dual hook/10,000 lbs single hook for the V-22. This limit is set by the external cargo hook capacity. The maximum VERTREP load will be further limited by the number/capacity of available pendants, aircraft gross weight (fuel load, passengers, and internal cargo), density altitude, and temperature.

APPENDIX A

Weapons Loading/Strikedown/Downloading and Recovery Guide

A.1 PURPOSE

This appendix provides a Loading/Strikedown/Downloading/Recovery Guide (Figure A-1) for use in determining whether an aircraft with unexpended or hung ordnance can be recovered aboard ship, what weapons can be loaded on the aircraft on the hangar deck, and what aircraft may be struck from the flight deck to the hangar deck with weapons loaded aboard them.

Figure A-1. Weapons Loading/Strikedown/Downloading and Recovery Guide

WEAPON	HANGAR DECK		RECOVERY	
	LOAD	STRIKEDOWN/ DOWNLOAD	UNEXPENDED	HUNG
General Purpose Bombs/PGM's	YES (1) (3) (18)	YES (1) (3)	YES (1)	YES (1)
GBU-24 B/B; E/B	YES (1) (3)	YES (1) (3)	NO (5)	NO (5)
JSOW: AGM-154 (series)	YES (3) (18)	YES (3)	YES (8) (9)	YES (8) (9)
Rocket Launchers: 2.75 Mod 4/5.0	NO	NO	YES	YES (12) (13)
Practice Bombs: MK-76/BDU-48/BDU-33	YES (3)	YES (3)	YES	YES
Aircraft Parachute Flare (LUU-2B/B)	YES (3) (6)	YES (3) (6)	YES	YES
20mm Aircraft Guns	YES (4) (7)	YES (4) (7) (11)	YES	YES
25mm Gun Pods	YES (4) (16)	YES (4) (16) (17)	YES	YES
GAU-16: .50 Cal/ M240: 7.62MM	YES (7)	YES (7)	YES	YES
Rockeye: CBU-100/Leaflet Bomb/PDU-5	YES (1) (3)	YES (1) (3)	YES	YES
Sidewinder: AIM-9 (series)	NO (2)	NO (2)	YES	YES
Sparrow: AIM-7 (series)	NO (2)	NO (2)	YES	YES
Maverick: AGM-65 (series)	NO (2)	NO (2)	YES	YES
AMRAAM: AIM-120 (all)	NO (2) (18)	NO (2)	YES	YES
Harpoon/SLAM: AGM-84 (series)	NO (2)	NO (2) (9)	YES (8) (10)	YES (8) (10)

Figure A-1. Weapons Loading/Strikedown/Downloading and Recovery Guide (cont.)

WEAPON	HANGAR DECK		RECOVERY	
	LOAD	STRIKEDOWN/ DOWNLOAD	UNEXPENDED	HUNG
Harm: AGM-88 (series)	NO (2)	NO (2)	YES	YES
Hellfire: AGM-114 (series)	NO (2)	NO (2)	YES	YES
JAGM: AGM-179	NO (2)	NO (2)	YES	YES
Mines: MK-62/63	YES (1) (3)	YES (1) (3)	YES	YES
Torpedoes: MK-46/50/54	YES (1) (3)	YES (1) (3)	YES	YES
Marine Location Marker: MK-25/MK-58	YES (3)	YES (3)	YES	YES
JAU-22/B Cartridge	NO (3)	NO (3)	YES	YES
Decoy Flares (All)	NO	NO	YES	YES
Chaff (w/cartridges)	NO (3)	NO (3)	YES	YES
TALD	YES (3)	YES (3)	YES	YES
I-TALD	NO (2)	NO (2)	YES (8) (9)	YES (8) (9)

Notes:

1. All applicable arming wires/safety clips/extractors/swivels intact.
2. Air-launched missiles shall not normally be loaded on the hangar deck except when operational necessity so dictate. Commanding officers may authorize loading of missiles on the hangar deck only up to the point of mechanical attachment of the weapon to the launcher/rack in accordance with the procedures prescribed in the appropriate NAVAIR weapon/store loading checklist.
3. Ejector rack/jettison cartridges and/or nose fuzes shall not be installed on the hangar deck.
4. The M61A1 and GPU-8/A gun ammunition is exempt from downloading requirements for up aircraft temporarily spotted in hangar decks and aircraft undergoing limited maintenance as defined in this manual; that is, turnaround maintenance, providing compliance with all gun dearm procedures of the applicable airborne weapon/store loading manual, associated checklists, and Joint Technical Data have been accomplished.
5. Guidance provided herein is subject to individual aircraft tactical manual (NATIP) limitations. In case of conflict between this guidance and a specific aircraft NATIP, the NATIP shall take precedence.
6. The M61A1/2 gun may be exempted from complete downloading when operations dictate that aircraft considered up and readily available for flight be temporarily spotted in the hangar deck (not to exceed 7 days); and/or for aircraft undergoing minor maintenance or servicing as defined in Chapter 7, paragraph 7.1.9 of this manual, provided the following conditions are met:
   a. All gun de-arm procedures of the applicable airborne weapon/stores loading manual and checklists have been accomplished.
   b. Ammunition shall be cycled into the drum clear of feed chutes and feed mechanisms of the gun system. If the quantity of rounds in the system exceeds the capacity of the ammunition drum, a minimum number of rounds may be present in the return chute completely clear of the gun.
   c. The aircraft gun access door shall be labeled with the upload date, quantity and type of ammunition loaded (i.e., 01JAN00/500 RDS/20MM HEI).
7. Strikedown of aircraft with jammed 20MM/GAU-16/M240 guns is prohibited.
8. If an Intent To Launch (ITL) signal has been initiated for Harpoon/SLAM/JSOW/ITALD weapons, the weapon shall be treated as a hung weapon during recovery, downloading, and strikedown.
9. An aircraft with ITL weapon(s) shall not be removed from the flight deck to the hangar deck until all ITL weapon(s) have been downloaded.

Figure A-1. Weapons Loading/Strikedown/Downloading and Recovery Guide (cont.)

Notes (cont.):

10. When operationally feasible, aircraft shall be kept airborne for 35 minutes following an ITL abort/failure. Re-spot of an ITL aircraft is prohibited during peacetime operations until 2.5 hours for Harpoon/SLAM and 3 hours for JSOW have elapsed from initial ITL abort/failure. Download prior to completion of the 2.5 hours for Harpoon/SLAM and 3 hours for JSOW waiting period is authorized provided that the missile is moved to a safe area on the flight deck with the nose oriented outboard over the deckedge.

WARNING

- Initiation of the ITL signal activates a battery within the Harpoon/SLAM weapon. Battery power available within the missile creates a potentially hazardous situation during aircraft recovery and/or while disconnecting the missile/weapon umbilical from the aircraft as electrical shorts can occur during these times, which may actuate the missile engine/pyrotechnics. Battery voltage will remain sufficiently high enough to allow engine start for up 35 minutes following ITL and to fire missile launch squibs within Harpoon/SLAM for up to 2.5 hours following ITL.
- If an ITALD ITL is verified, do not remove launch adapter umbilical connector from weapon. Move aircraft to safe area, download missile, and move missile to safe area until 2.5 hours have elapsed from time of ITL. Remain clear of aft end of missile.

11. The A/A49E-27 gun ammunition is exempt from downloading requirements for up aircraft temporarily spotted in the hangar decks and aircraft undergoing limited maintenance; that is, turnaround maintenance, providing that compliance with all gun de-arm procedures of the airborne weapon/store loading manual, associated checklists, and ammunition removal from the feed chute (ammunition in ammunition container only) has been accomplished.
12. Helicopters with unexpended or hung ordnance shall fly shipboard recovery patterns with weapons pointed away from the ship to the maximum extent practicable and land in an off-set approach. Aircraft will be pointed clear of aircraft, personnel, and equipment during dearming process. Aircraft shall be dearmed by installing the launcher safing pin and disconnecting the firing connector umbilical. Helicopters with hung/misfired forward firing ordnance shall not launch/recover on Spot 7.
13. Fixed wing aircraft are authorized for recovery with hung rockets. Prior to taxiing out of the landing area, aircraft recovering with hung rockets shall have the launcher safing pin installed and the firing connector umbilical disconnected. If it is apparent that a rocket fired but failed to exit the launcher and/or damage to the rocket pod is visible, recovery is not authorized and the pod must be jettisoned.
14. Aircraft equipped with pneumatic weapons suspension and release equipment may be moved to the hangar fully pressurized provided the mechanical safing features are in a safe condition.
15. Pneumatic suspension and release equipment may be stored fully pressurized when not installed on aircraft provided mechanical safing features on the equipment indicate a safe condition.
16. The Rotor Assembly of jammed GPU-8/A Gun Pods will be made “Safe and Clear” of all ammunition at the flight deck level in accordance with Joint Technical Data before strike down for clearing of any additional ammunition from the helical feed system.
17. The GPU-8/A Gun Pod (F-35C) is exempt from downloading requirements for up aircraft temporarily spotted in the hangar decks and aircraft undergoing limited maintenance, i.e., turnaround maintenance, providing compliance with all gun dearm procedures of Joint Technical Data, and associated checklists have been accomplished.
18. No live ordnance shall be loaded in the F-35C weapons bay on the hangar deck.

APPENDIX B

Carrier Flight Deck Helicopter Operating Spots

B.1 PURPOSE

The locations of all helicopter launch and recovery spots on the various CVN type or CV type ships are identified in Figures B-1, B-2, and B-3.

Figure B-1. CVN 68–77 Helicopter Operating Spots with Precision H-60 Spots

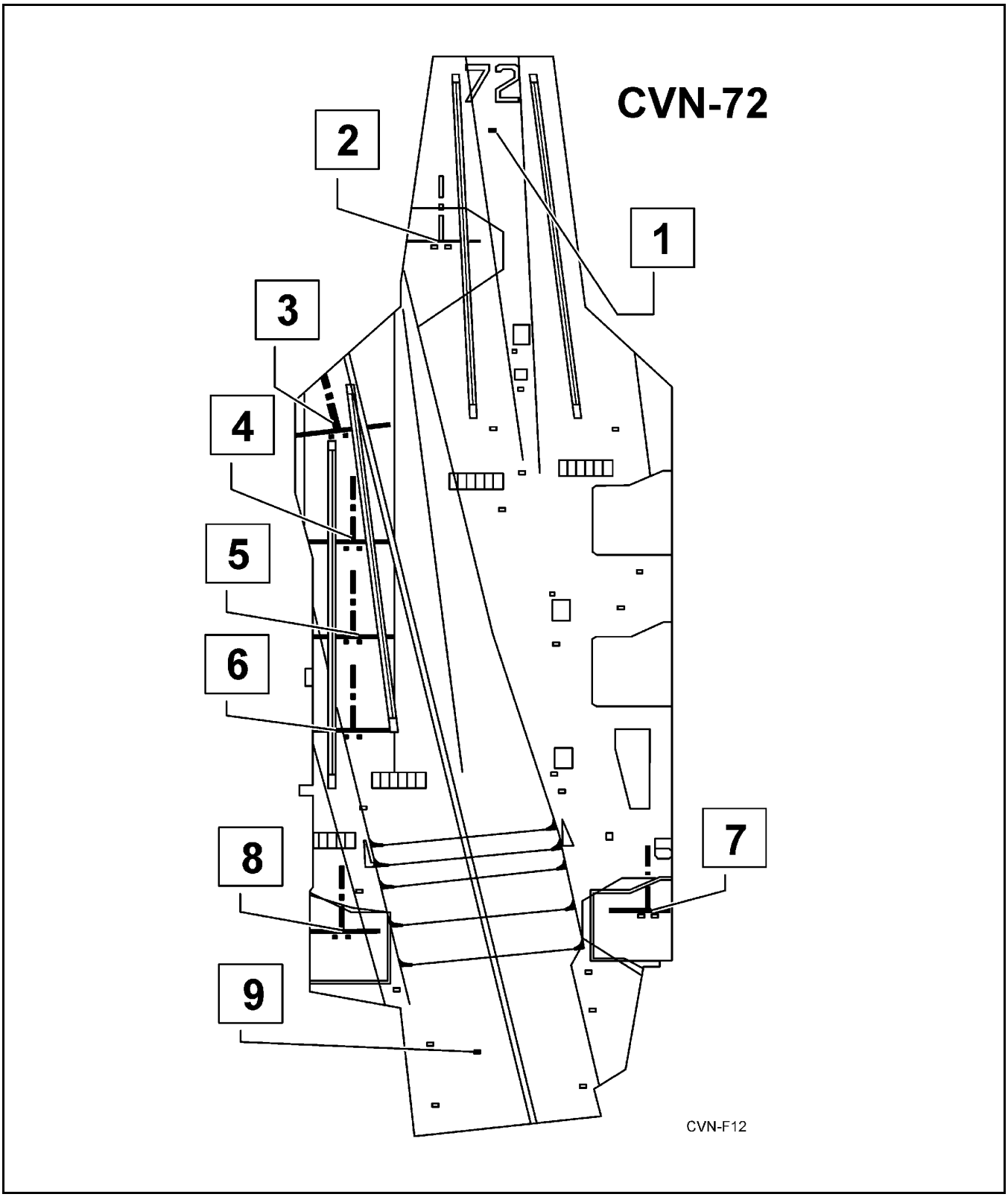

Figure B-2. AV-8B/TAV-8B Typical Deck Marking Arrangement CV/CVN Type Ship

AV-8B/TAV-8B TYPICAL DECK MARKING ARRANGEMENT
CV/CVN TYPE SHIP

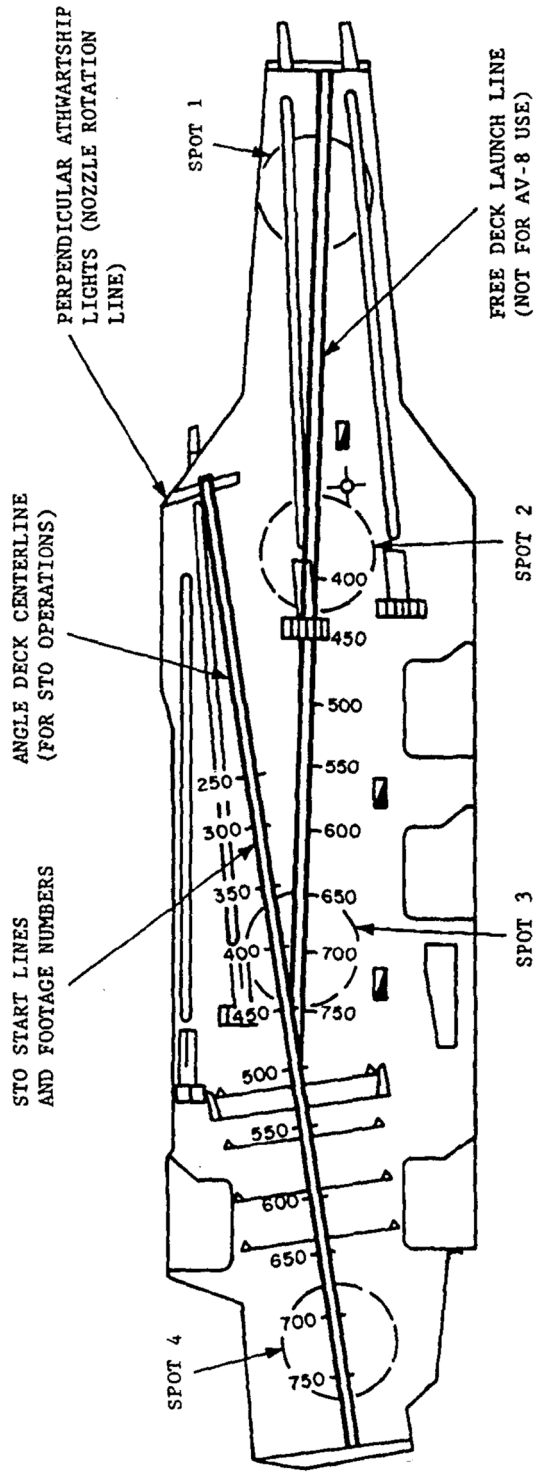

NOTES: (1) THE DASHED CIRCLES ARE SHOWN ONLY TO EMPHASIZE UNMARKED AV-8B/TAV-8B VTOL SPOTS AND ARE NOT FLIGHT DECK MARKINGS.

Figure B-3. CVN 68–77 Tiltrotor Operating Spots

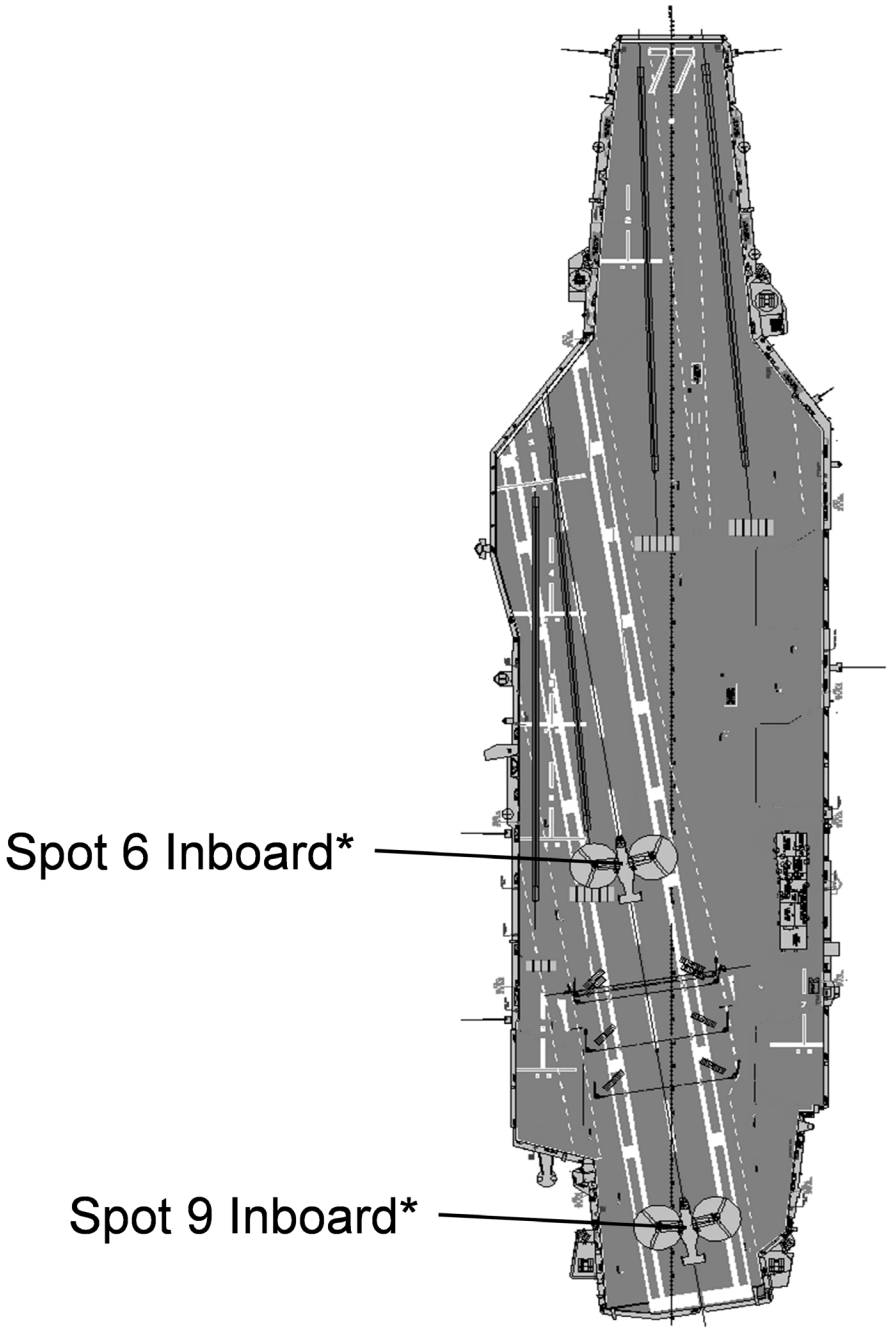

*Note: Landing spots are located inboard of existing helicopter operating spots and oriented such that the aircraft's nose is aligned with the ship's angled deck centerline.

APPENDIX C

CV Helicopter Launch and Recovery Wind Limitations

C.1 PURPOSE

Launch and recovery wind envelopes for all helicopter spots on CVN type or CV type ships are contained in this appendix. Individually, the envelopes show the maximum wind speed and direction allowed for launching and recovering each type of helicopter from each shipboard spot with acceptable margins for safety. Collectively, the envelopes provide a broad inventory of launch and recovery wind envelopes for helicopters operating from CV flight decks. Helicopter spot locations are published in Appendix B. Used together, Appendixes B and C provide a full array of launch and recovery options for use during carrier operations.

C.2 SHIP HELICOPTER INTEROPERABILITY REFERENCE TABLE

The Ship Helicopter Interoperability Reference Table (SHIRT) (Figure C-1) provides direction to aviators on the approved envelopes for a given helicopter and ship combination. As a quick reference, it also summarizes the operational capability of the fleet in general. If a cell of the table is empty, it indicates that no envelope exists for that combination, therefore launch and recovery operations are prohibited. For Navy/Marine Corps owned or contracted aircraft operating in support of the Navy/Marine Corps, the envelopes provided represent airworthiness approval. For all other aircraft, the envelopes provided are recommendations only and airworthiness approval for shipboard operations must be received by the operator's respective airworthiness authority prior to operating at the ship. The SHIRT provides information only relating to the launch and recovery envelopes and the presence of an envelope does not infer that a valid aviation facilities certification is in place for a given ship. Aircrew must consult the Aviation Facilities Resume for the most up to date certification information for the ship.

C.3 LAUNCH AND RECOVERY WIND ENVELOPE FEATURES

The features built into the launch and recovery wind envelopes in this manual are intended to provide commanding officers with a broad menu of safe operating envelopes and allow maximum flexibility during the conduct of flight deck operations. These envelopes incorporate many features. Unless otherwise specified, the envelopes:

1. Are based on steady state winds measured by the ship's windward mast mounted anemometer.

Limiting velocities on the wind charts represent maximums for steady state, non-turbulent winds. During gusty wind conditions and/or pitching decks, if the gust spread is over 10 knots or more, reduce the maximum winds allowed for rotor engagement and disengagement by 10 knots for all quadrants.

WARNING

Failure for V-22 to account for shipboard launch and recovery envelope torque planning guidance may result in power required exceeding power available, resulting in unrecoverable descent rates and possible loss of aircraft.

Note

- Considerable difference may exist between the actual flight deck winds and those measured by the mast-mounted anemometers.
- For specific wind conditions, additional power margin may be required for V-22 to overcome external air wake disturbances in the vicinity of the flight deck edge. This wake disturbance may be amplified if the approach stagnates near the deck edge.

2. Are defined relative to the ship's centerline.
3. Are valid for helicopter landing spots identified in Appendix B. as indicated on the wind envelope.
4. Are valid for normal approach to the stop, with the helicopter aligned with the ship's centerline, angle, or designated line-up line at touchdown.
5. Are valid for all certified lighting configurations.
6. Are shaded to distinguish day limits from night limits.
7. Are valid for the PAC in either seat, unless otherwise specified in the envelope.
8. Are valid for all NATOPS-approved loading configurations, GW, and CG conditions, provided power available exceeds power required to hover out of ground effect.

Note

For most ships, aircraft NATOPS zero wind HOGE torque is often the best approximation to shipboard hover torque requirements for all wind conditions; however, an additional power margin of 5 to 10 percent may be required to approach, overcome turbulence, decelerate, or depart the vicinity of the flight deck. Envelope regions exhibiting hover requirement in excess of NATOPS zero wind HOGE torque requirements are identified in an appropriate note on the wind envelope.

9. Notes pertinent to a specific aircraft/spot combination are presented on the applicable wind envelope.

C.4 WIND LIMIT ORIENTATION

The wind limits shown on the envelopes are the maximum allowable wind speed and direction over the deck. For helicopter and landing spot combinations where the common envelope is required by the SHIRT, the limits of the common envelope are oriented relative to the nose of the aircraft on touchdown. For all other envelopes, the wind limits are oriented relative to the ship centerline.

C.4.1 CVN Day/NVD V-22 STO Operations

Shipboard day/NVD STO operations authorized from inboard of spot 6 and aligned with the angled deck centerline within the following envelope.

- For ambient temperatures less than 32 °C, gross weights up to 57,000 lbs and winds 20 to 40 kts with crosswind component limit of plus/minus 5 kts relative to the angled deck centerline.
- For ambient temperatures from 32 °C and up to 40 °C, gross weights up to 55,000 lbs and winds 20 to 40 kts with crosswind component limit of plus/minus 5 kts relative to the angled deck centerline.
- STO envelope valid for max ship pitch plus/minus 2 degrees and max ship roll plus/minus 3 degrees.
- Power margin planning to 117 percent mast torque authorized.

C.5 OTHER SOURCES OF HELICOPTER WIND ENVELOPES

Copies of applicable envelopes appearing in this manual are also published in the NATOPS Pocket Checklist H-60 Wind Envelopes A1-H60CA-NFM-900.

C.6 USE OF NOTES IN WIND ENVELOPES

Because room on the launch and recovery wind envelope is scarce, the standard labeling for warnings, cautions and notes can more than fill the remaining space. To mitigate this problem, all notations that include restrictions are marked on the wind envelopes in the form of Notes, even though they may involve warning or caution material. Therefore, it is imperative that all of the information on a wind envelope be reviewed thoroughly before the envelope is used.

C.7 QUESTIONS AND COMMENTS ON WIND ENVELOPES

Comments/questions about the wind envelopes should be submitted directly to COMNAVAIRSYSCOM (AIR-4.0P) via the Airworthiness Issues Resolution System (AIRS) which may be accessed online via the Airworthiness website at https://airworthiness.navair.navy.mil. In the event the internet is not available to you, you may mail your questions and comments to:

Commander Naval Air Systems Command (Air-4.0P) 22244 Cedar Point Rd, Bldg 460, Rm 228 Patuxent River, MD 20670-1163

Figure C-1. Ship-Helicopter Interoperability Reference Table (SHIRT) for CV/CVN

SHIP	LANDING SPOT	H-60	V-22	H-53E	AH-1W	AH-1Z	UH-1Y	H-3	H-57	H-6	H-47	H-58	H-64	H-65	EC-225
CV-68 Class	Spot 1	C-9	—	C-4	C-2	C-2	C-2	C-2	C-2	C-2	C-2	C-2	C-2	C-2	C-2
	Spot 2	C-9	—	C-4	C-2	C-2	C-2	C-2	C-2	C-2	C-2	C-2	C-2	C-2	C-2
	Spot 3	C-10	—	—	C-2	C-2	C-2	C-2	C-2	C-2	C-2	C-2	C-2	C-2	C-2
	Spot 4	C-10	—	C-5	C-2	C-2	C-2	C-2	C-2	C-2	C-2	C-2	C-2	C-2	C-2
	Spot 5	C-10	—	C-5	C-2	C-2	C-2	C-2	C-2	C-2	C-2	C-2	C-2	C-2	C-2
	Spot 6	C-10	C-17	C-5	C-2	C-2	C-2	C-2	C-2	C-2	C-3	C-2	C-2	C-2	C-2
	Spot 7	C-11	—	—	—	—	—	—	—	—	—	—	—	—	—
	Spot 8	C-10	—	—	C-2	C-2	C-2	C-2	C-2	C-2	C-2	C-2	C-2	C-2	C-2
	Spot 9	C-10	C-19	C-5	C-2	C-2	C-2	C-2	C-2	C-2	C-3	C-2	C-2	C-2	C-2
CVN-78 Class	Spot 1	C-12	—	C-6	C-2	C-2	C-2	C-2	C-2	C-2	C-2	C-2	C-2	C-2	C-2
	Spot 2	C-12	—	C-6	C-2	C-2	C-2	C-2	C-2	C-2	C-2	C-2	C-2	C-2	C-2
	Spot 3	C-13	—	—	C-2	C-2	C-2	C-2	C-2	C-2	C-2	C-2	C-2	C-2	C-2
	Spot 4	C-13	—	C-7	C-2	C-2	C-2	C-2	C-2	C-2	C-2	C-2	C-2	C-2	C-2
	Spot 5	C-13	—	C-7	C-2	C-2	C-2	C-2	C-2	C-2	C-2	C-2	C-2	C-2	C-2
	Spot 6	C-13	—	C-7	C-2	C-2	C-2	C-2	C-2	C-2	C-2	C-2	C-2	C-2	C-2
	Spot 7	C-14	—	—	—	—	—	—	—	—	—	—	—	—	—
	Spot 8	C-15	—	—	C-2	C-2	C-2	C-2	C-2	C-2	C-2	C-2	C-2	C-2	C-2
	Spot 9	C-16	—	C-8	C-2	C-2	C-2	C-2	C-2	C-2	C-2	C-2	C-2	C-2	C-2

Notes:
1. Empty cells indicate that no operational capability exists for that ship and helicopter combination.
2. In cases where aircraft variant is not specified (i.e., H-60), consult referenced figure from the table for the approved envelope for the desired variant of aircraft.
3. Launch and recovery envelopes provided for Non Navy/Marine corps aircraft are recommendations only. Consult respective service's airworthiness authority for approval of shipboard operations.
4. This table does not indicate or infer a valid aviation facilities certification for any ship. Consult the Ship Resume for details on current AVCERT.

Figure C-2. CVN Common Launch and Recovery Envelope

CVN-COMMON-01A

NOTE

HELICOPTER ALIGNED WITH SHIP'S LINEUP LINE AND WIND SHOWN RELATIVE TO AIRCRAFT'S NOSE. IF THE SHIP'S LINEUP LINE IS NOT FORE/AFT, THEN THIS ENVELOPE IS TO BE ROTATED TO THE ANGLE OF THE LINEUP LINE.

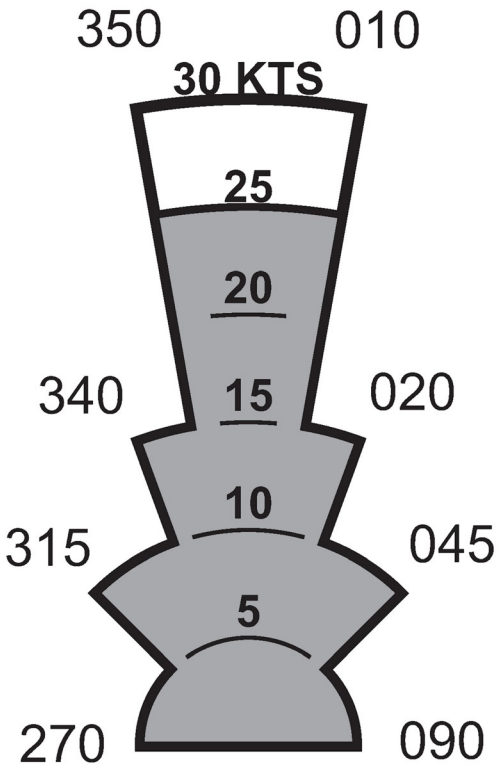

NIGHT
DAY

Figure C-3. H-47 Launch and Recovery Envelope for CVN 68−77 Angle Spots (with precision H-60 spots)

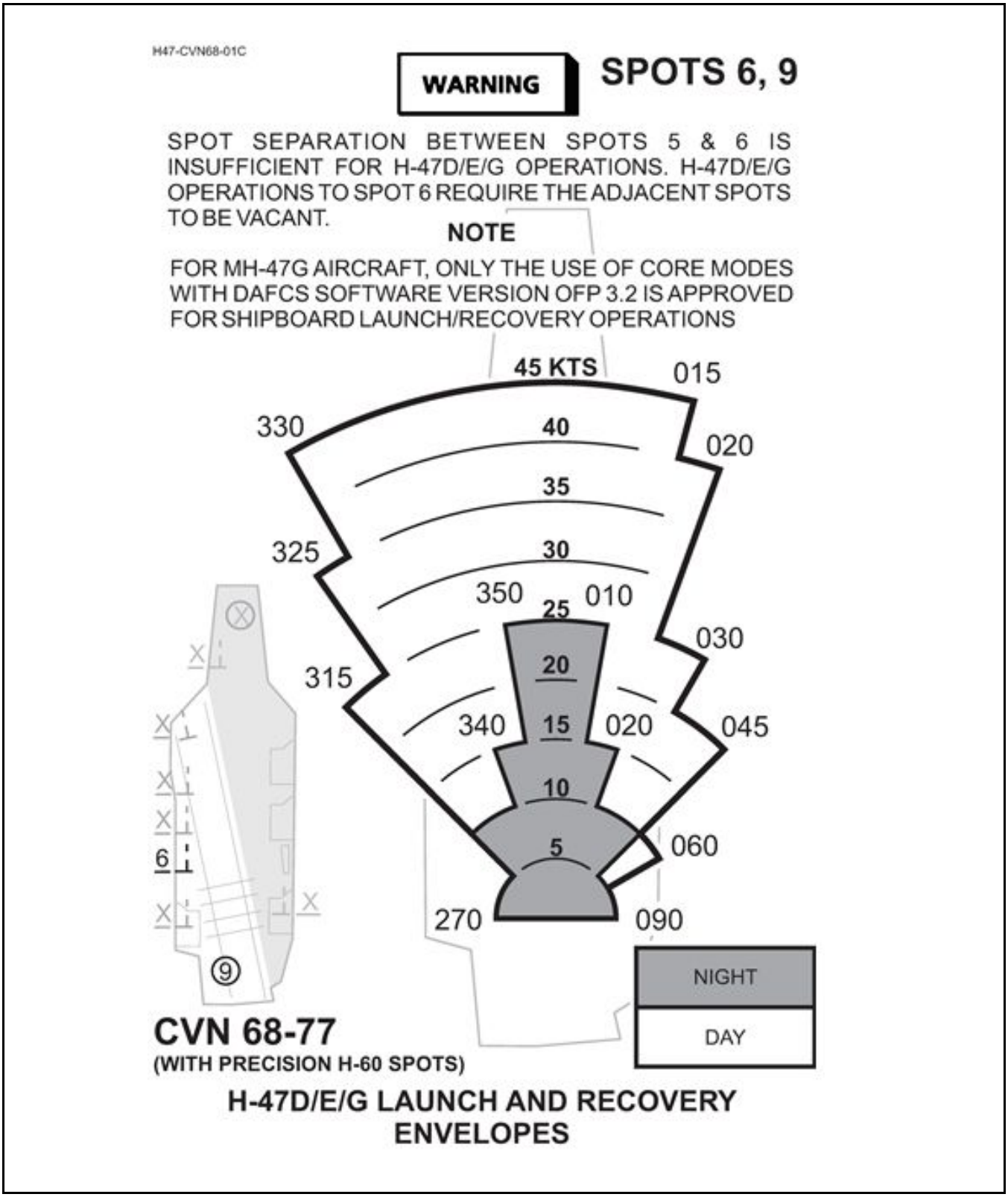

Figure C-4. H-53 Launch and Recovery Envelopes for CVN 68−77 Spots 1 & 2

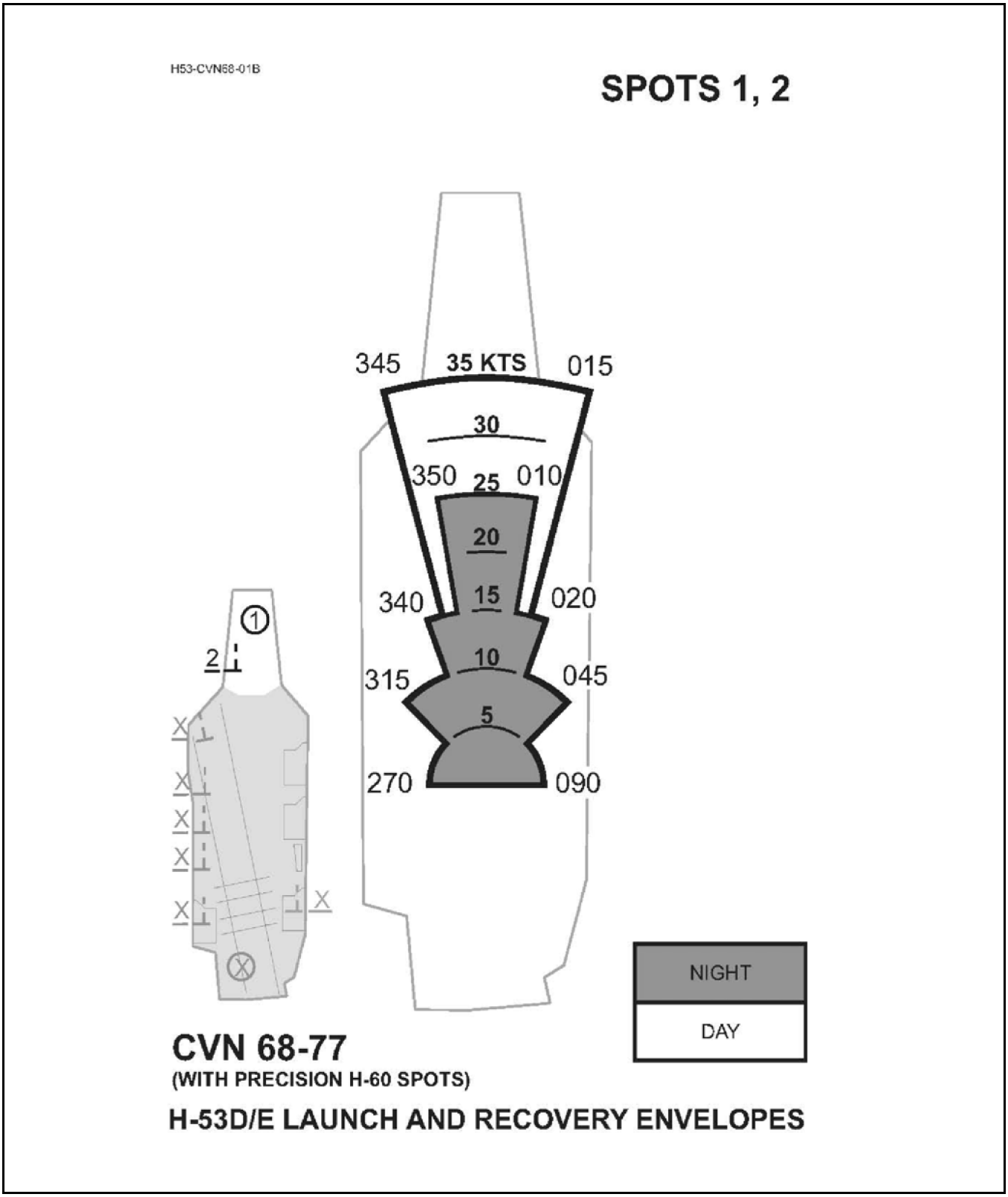

Figure C-5. H-53 Launch and Recovery Envelopes for CVN 68−77 Spots 4, 5, 6, & 9

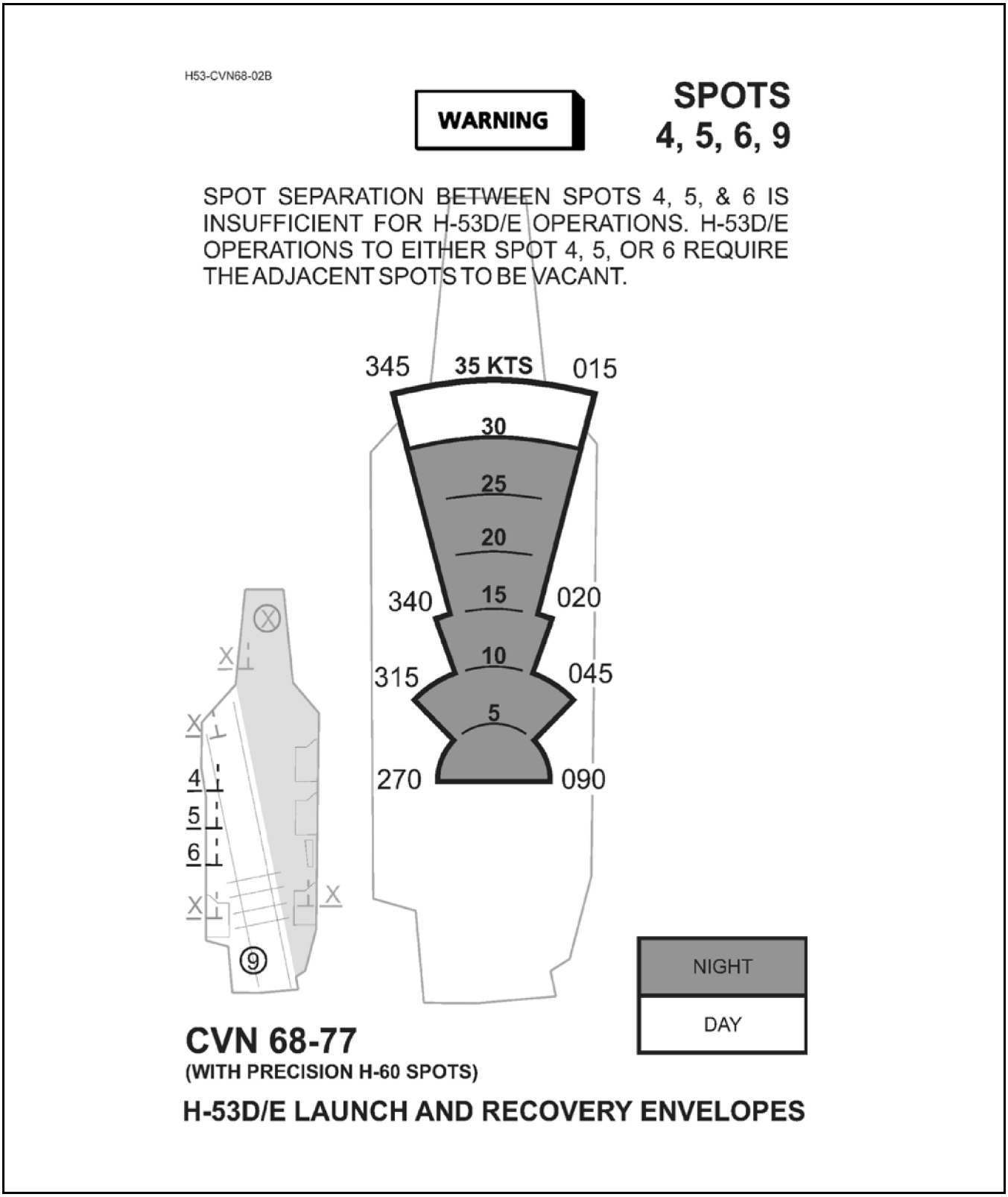

Figure C-6. H-53 Launch and Recovery Envelopes for CVN 78 Spots 1 & 2

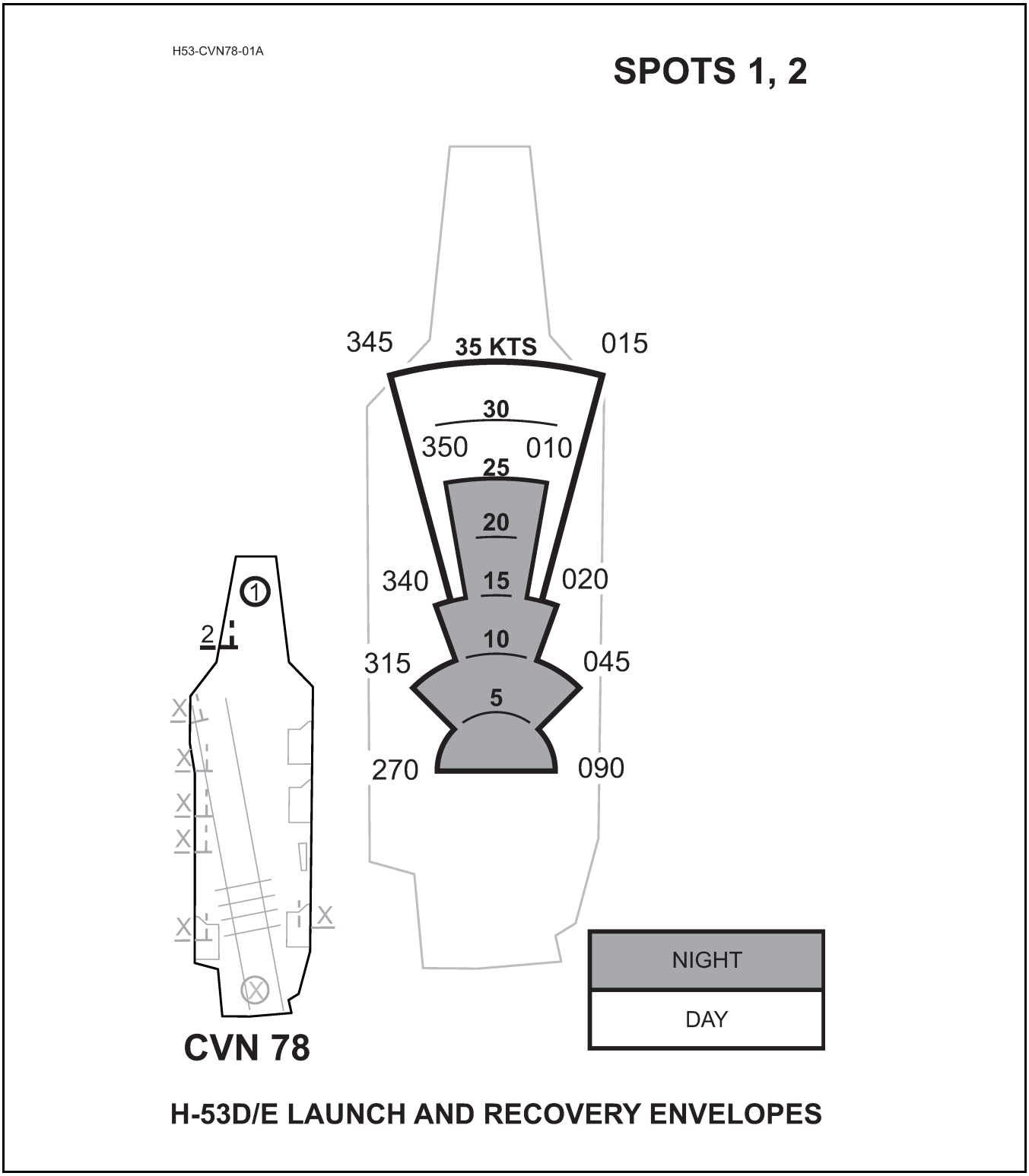

Figure C-7. H-53 Launch and Recovery Envelopes for CVN 78 Spots 4, 5, & 6

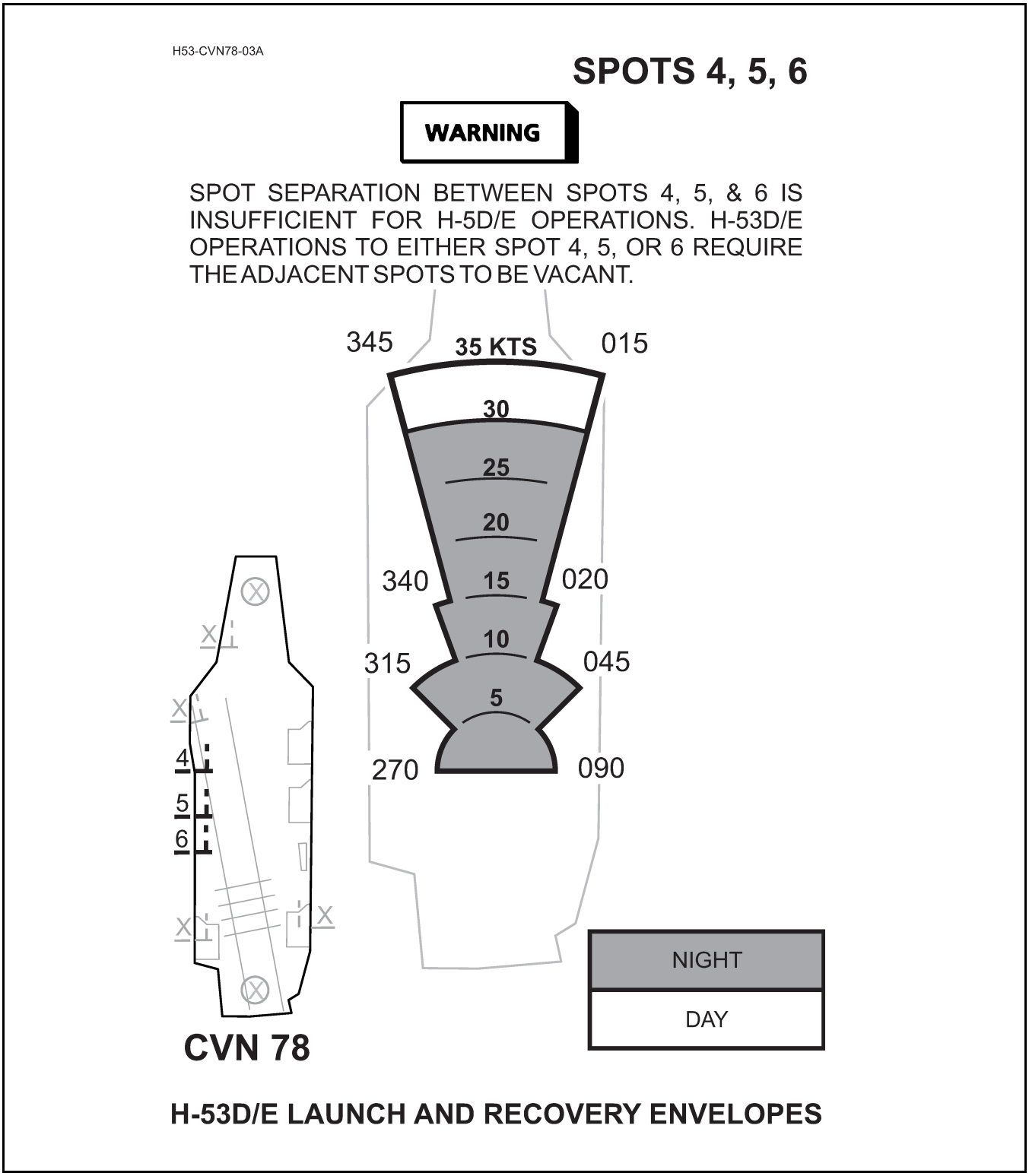

Figure C-8. H-53 Launch and Recovery Envelopes for CVN 78 Spot 9

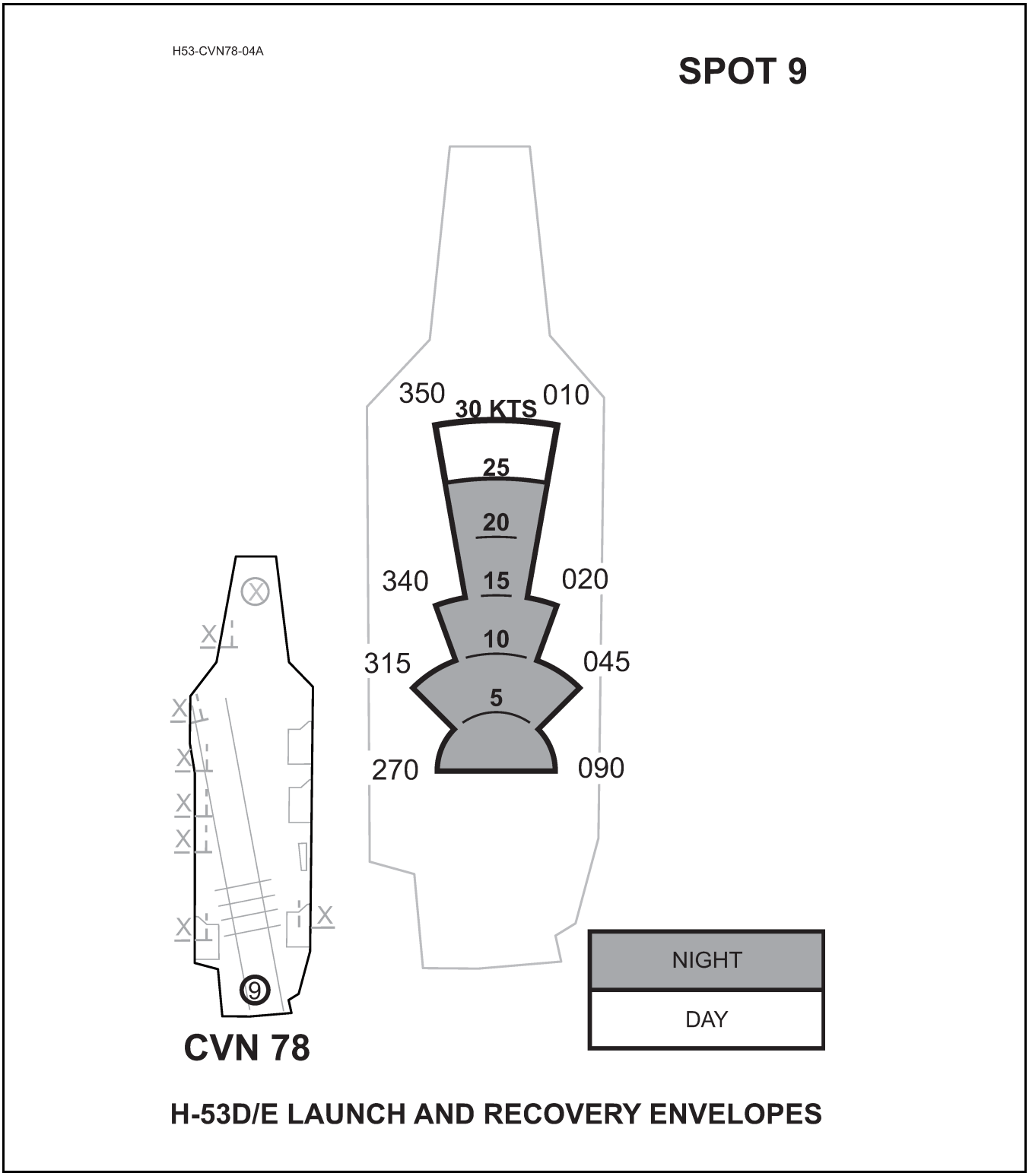

Figure C-9. H-60 Launch and Recovery Envelopes for CVN 68−77 Bow Spots 1 & 2

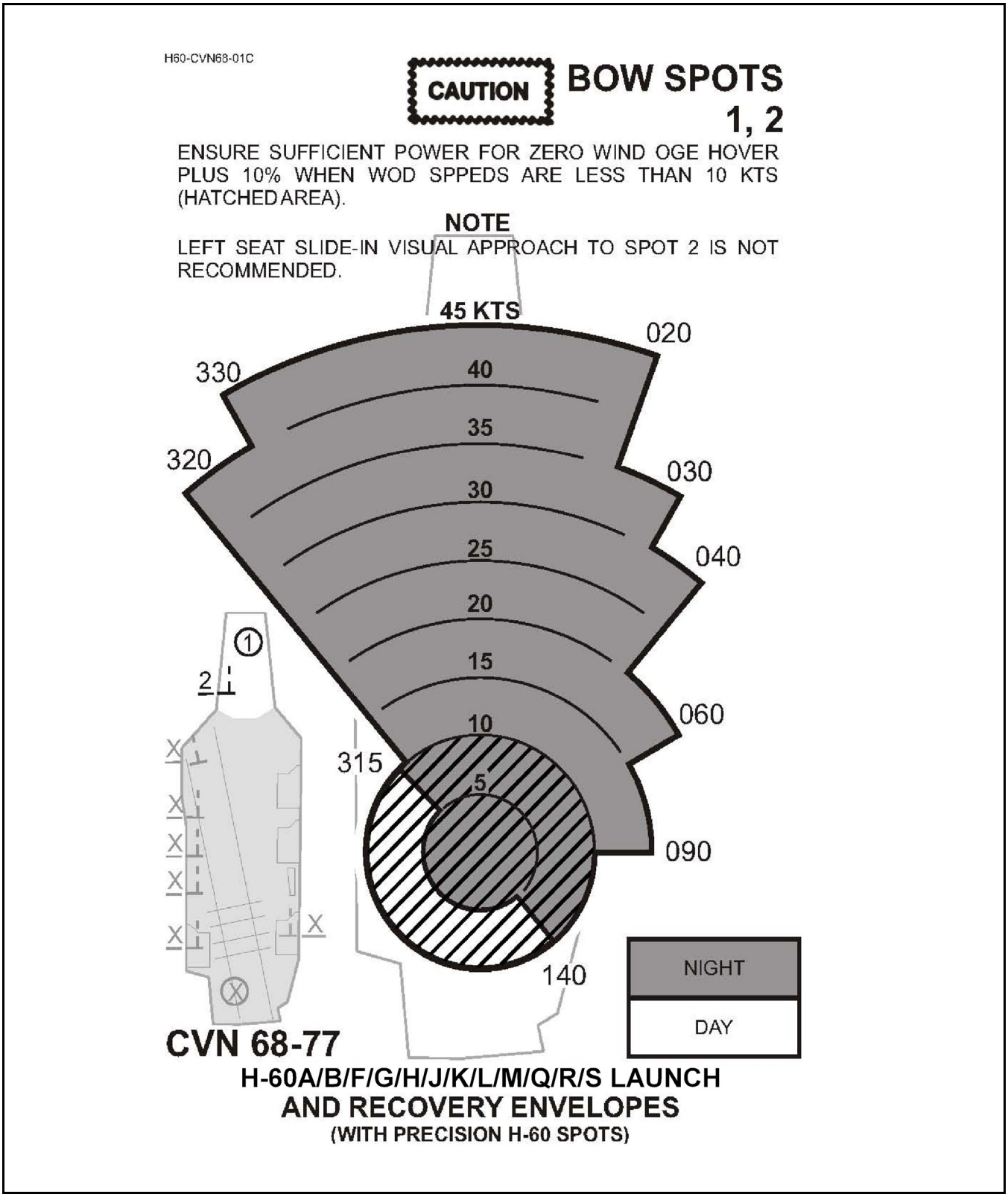

Figure C-10. H-60 Launch and Recovery Envelopes for CVN 68−77 Angle Spots 3, 4, 5, 6, 8, & 9

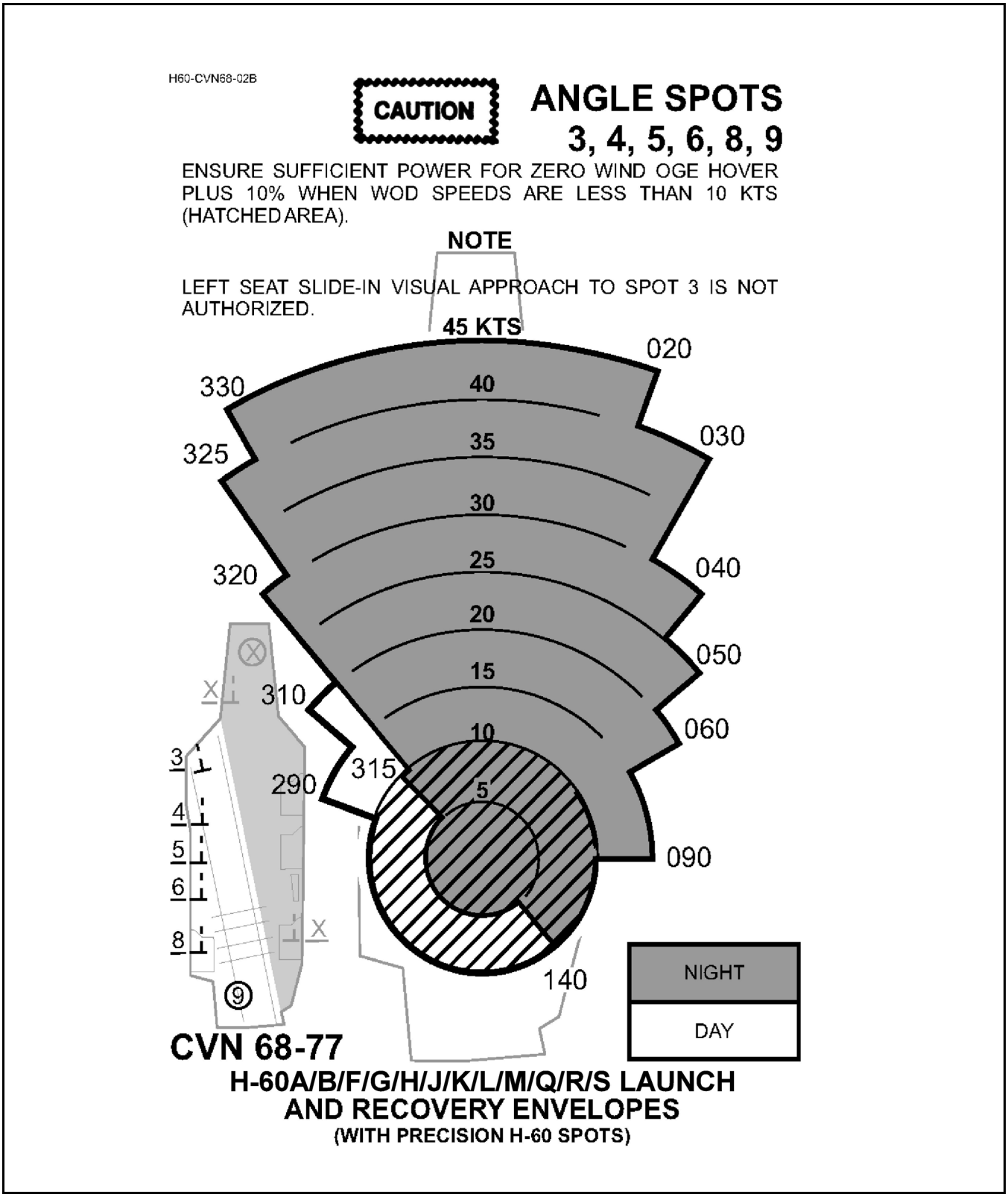

Figure C-11. H-60 Launch and Recovery Envelopes for CVN 68−77 Spot 7

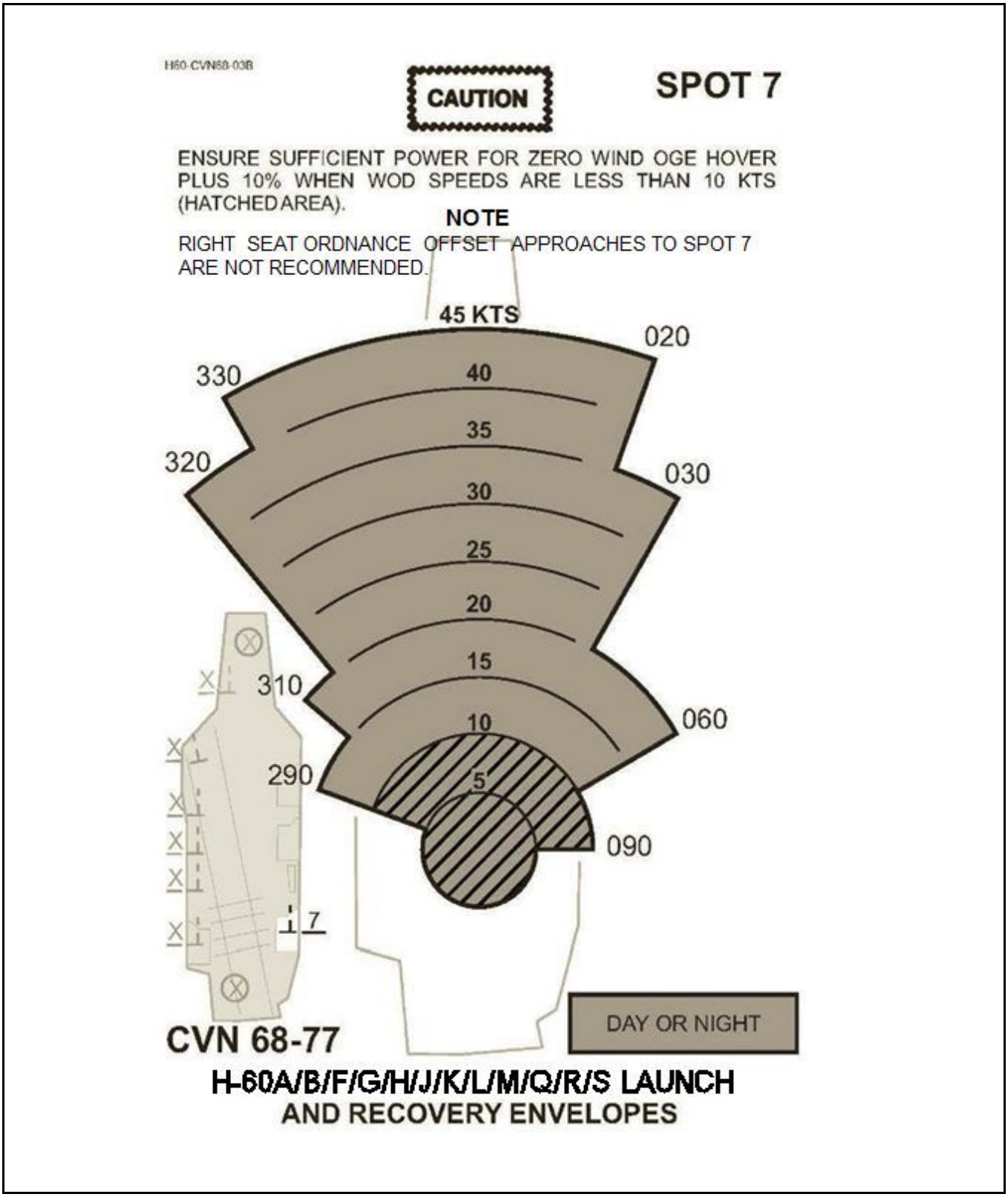

Figure C-12. H-60 Launch and Recovery Envelopes for CVN 78 Spots 1 & 2

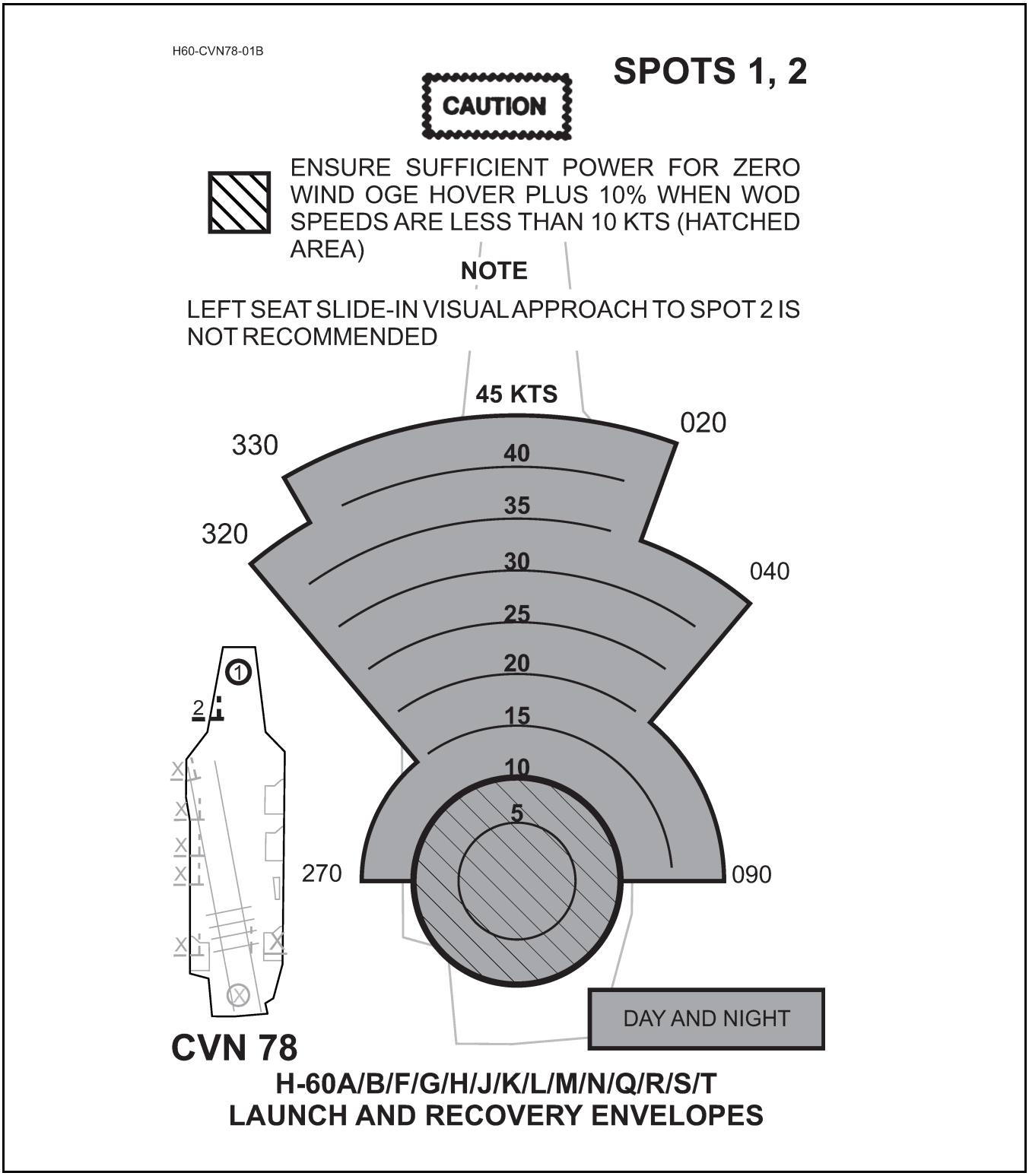

Figure C-13. H-60 Launch and Recovery Envelopes for CVN 78 Spots 3, 4, 5, & 6

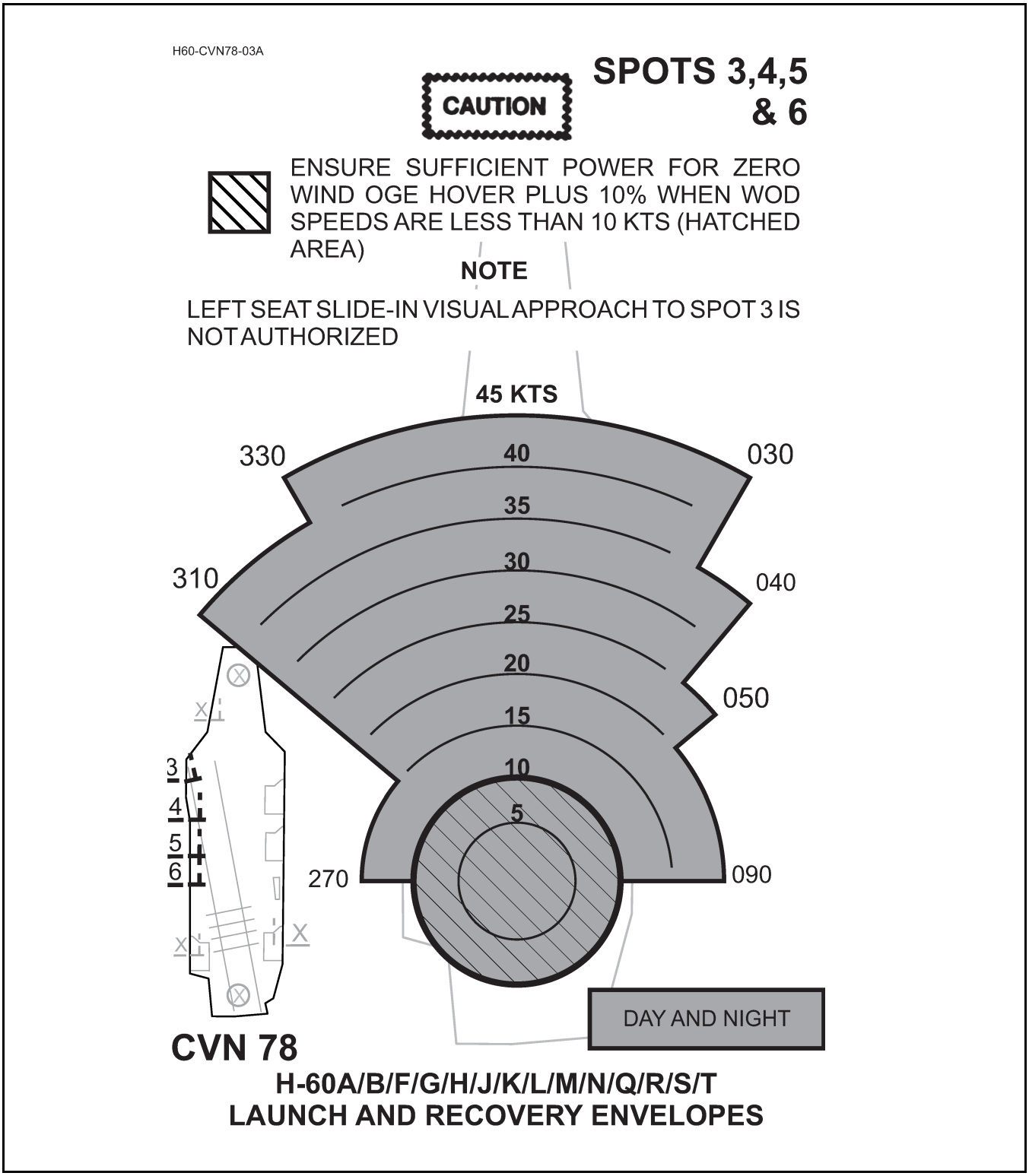

Figure C-14. H-60 Launch and Recovery Envelopes for CVN 78 Spot 7

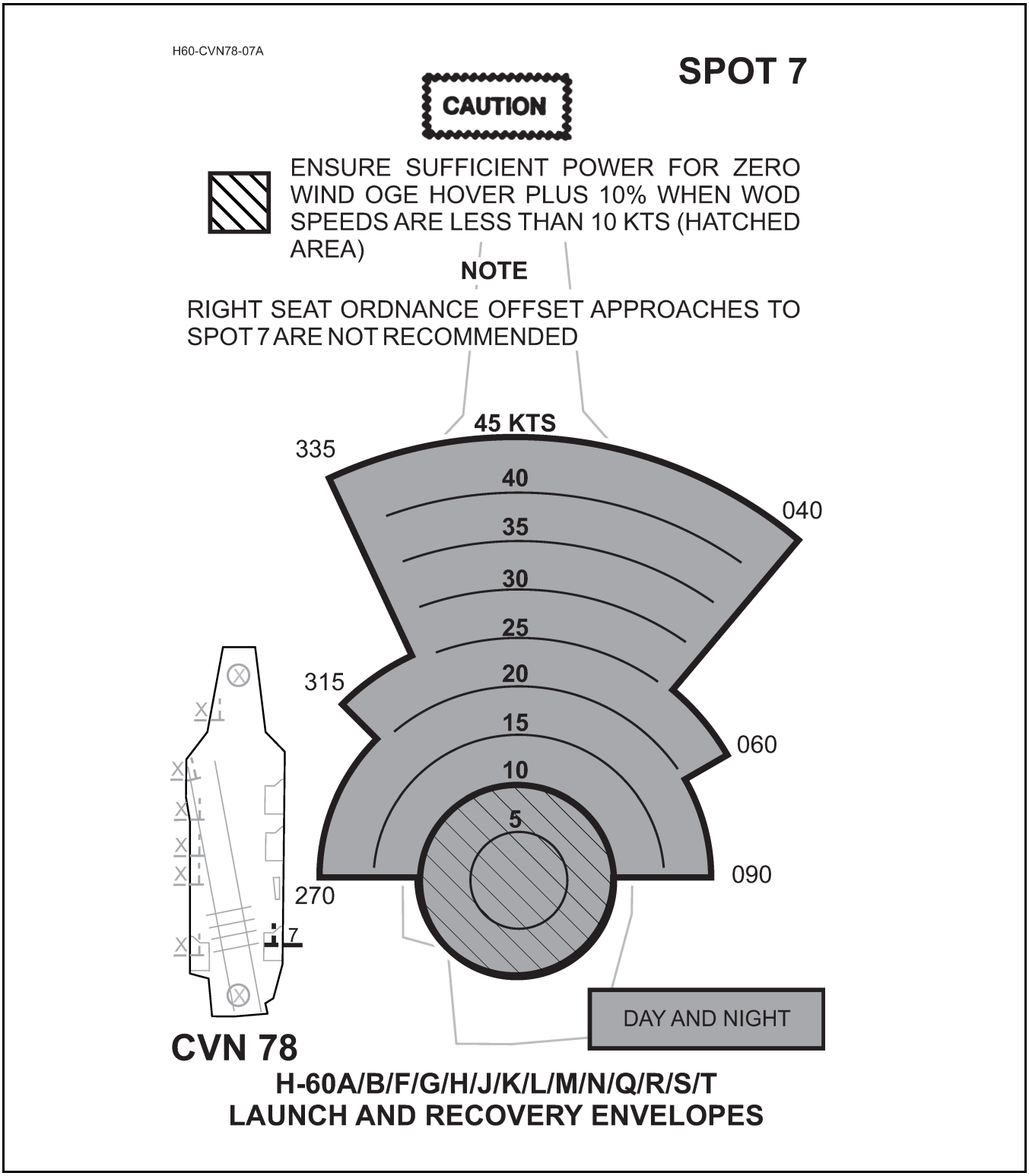

Figure C-15. H-60 Launch and Recovery Envelopes for CVN 78 Spot 8

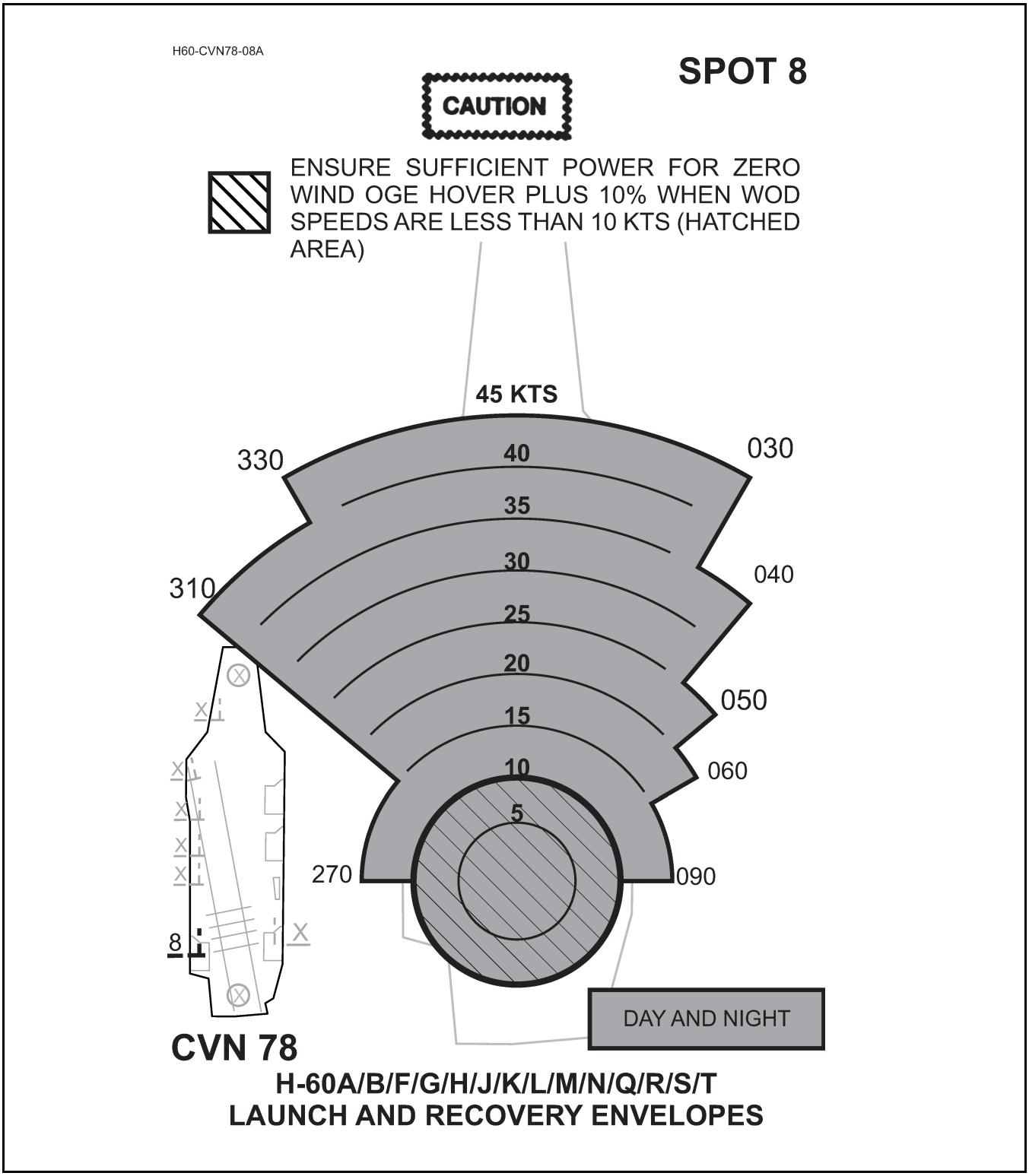

Figure C-16. H-60 Launch and Recovery Envelopes for CVN 78 Spot 9

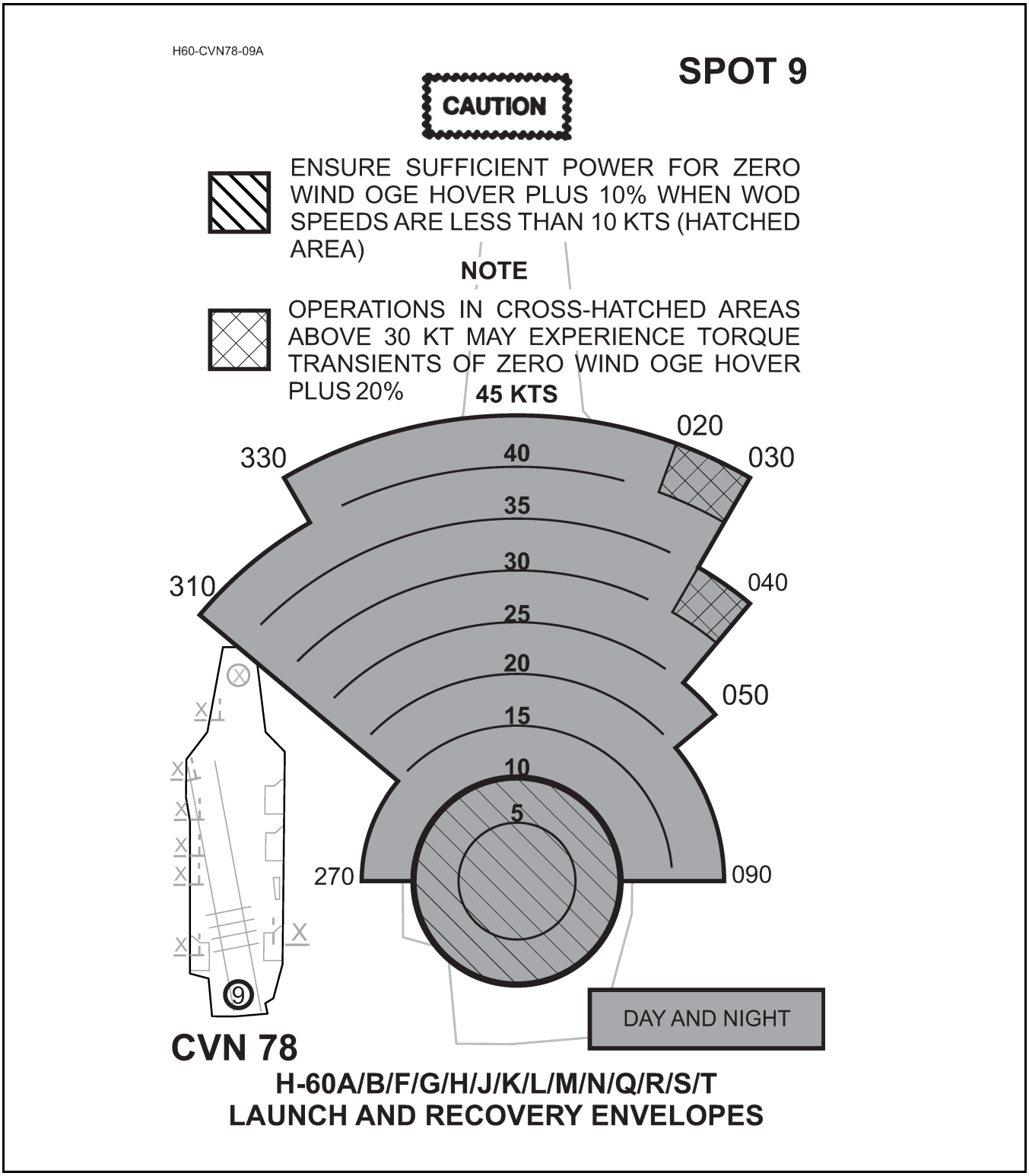

Figure C-17. V-22B Launch and Recovery Envelopes for CVN 68−77 Spot 6

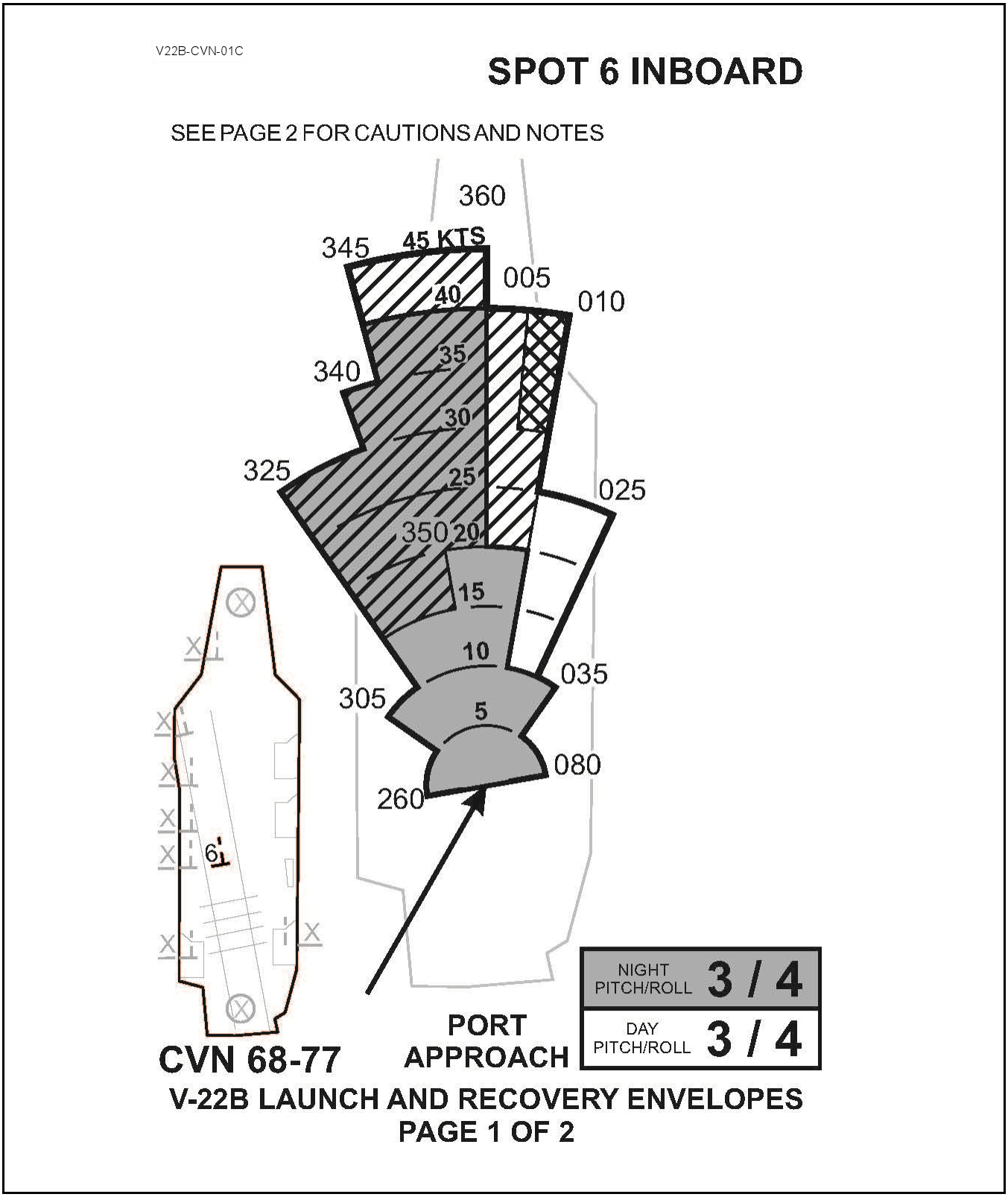

Figure C-18. V-22B Launch and Recovery Envelopes for CVN 68−77 Spot 6

V22B-CVN-01C

SPOT 6 INBOARD

CAUTION

FLIGHT OPERATION IN HATCHED AREA MAY REQUIRE ALTERNATE APPROACH TECHNIQUE DUE TO POTENTIAL FOR PITCH-UP WITH SIDESLIP ON APPROACH.

FLIGHT OPERATION IN CROSSHATCHED AREA MAY REQUIRE ALTERNATE APPROACH TECHNIQUE DUE TO POTENTIAL FOR PITCH-UP WITH SIDESLIP ON APPROACH.

FLIGHT OPERATION IN CROSSHATCHED AREA MAY RESULT IN PITCH AND ROLL TRANSIENTS DURING TAKEOFF.

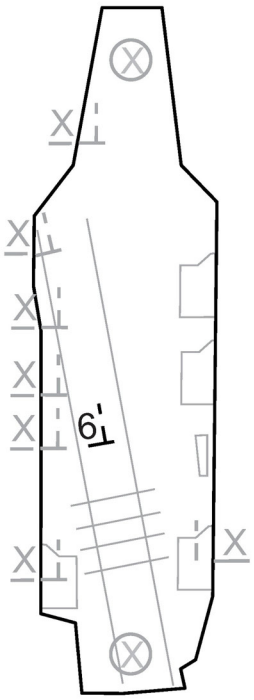

NOTES

- AIRCRAFT SHALL BE ALIGNED WITH THE ANGLED DECK RUNWAY CENTERLINE.
- LEFT SEAT CROSS-COCKPIT OPERATIONS DURING ALTERNATE APPROACHES MAY RESULT IN SEVERELY DEGRADED VISUAL CUES...

CVN 68-77

V-22B LAUNCH AND RECOVERY ENVELOPES PAGE 2 OF 2

Figure C-19. V-22B Launch and Recovery Envelopes for CVN 68−77 Spot 9

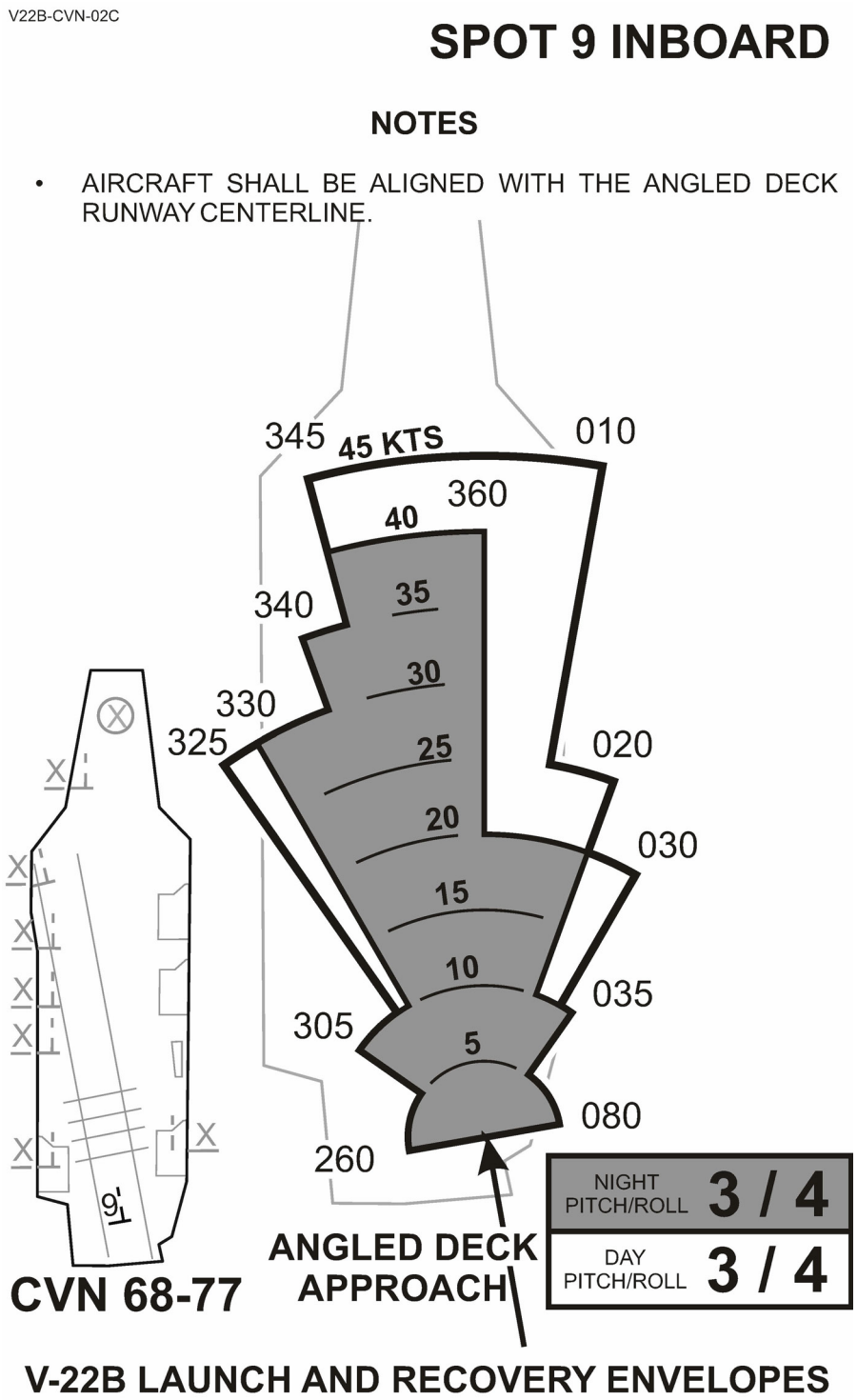

APPENDIX D

Jet Borne Lift Launch and Recovery Wind Limitations

D.1 PURPOSE

Launch and recovery wind envelopes for all Jet Borne Lift aircraft on CVN class ships are contained in this appendix. Individually, the envelopes show the maximum wind speed and direction allowed for launching and recovering each type of Jet Borne Lift aircraft from each shipboard spot with acceptable margins for safety. Collectively, the envelopes provide a broad inventory of launch and recovery wind envelopes for Jet Borne Lift aircraft operating from CV flight decks. Jet Borne Lift aircraft spot locations are published in Appendix B. Used together, Appendixes B and C provide a full array of launch and recovery options for use during carrier operations.

D.2 USE OF NOTES IN WIND ENVELOPES

Because room on the launch and recovery wind envelope is scarce, the standard labeling for warnings, cautions and notes can more than fill the remaining space. To mitigate this problem, all notations that include restrictions are marked on the wind envelopes in the form of Notes, even though they may involve warning or caution material. Therefore, it is imperative that all of the information on a wind envelope be reviewed thoroughly before the envelope is used.

D.3 QUESTIONS AND COMMENTS ON WIND ENVELOPES

Comments/questions about the wind envelopes should be submitted directly to COMNAVAIRSYSCOM (AIR-4.0P) via the Airworthiness Issues Resolution System (AIRS) which may be accessed online via the Airworthiness website at https://airworthiness.navair.navy.mil. In the event the internet is not available to you, you may mail your questions and comments to: Commander Naval Air Systems Command (Air-4.0P) 22244 Cedar Point Rd, Bldg 460, Rm 228 Patuxent River, MD 20670-1163.

Figure D-1. AV-8B/TAV-8B STO Crosswind Limitations

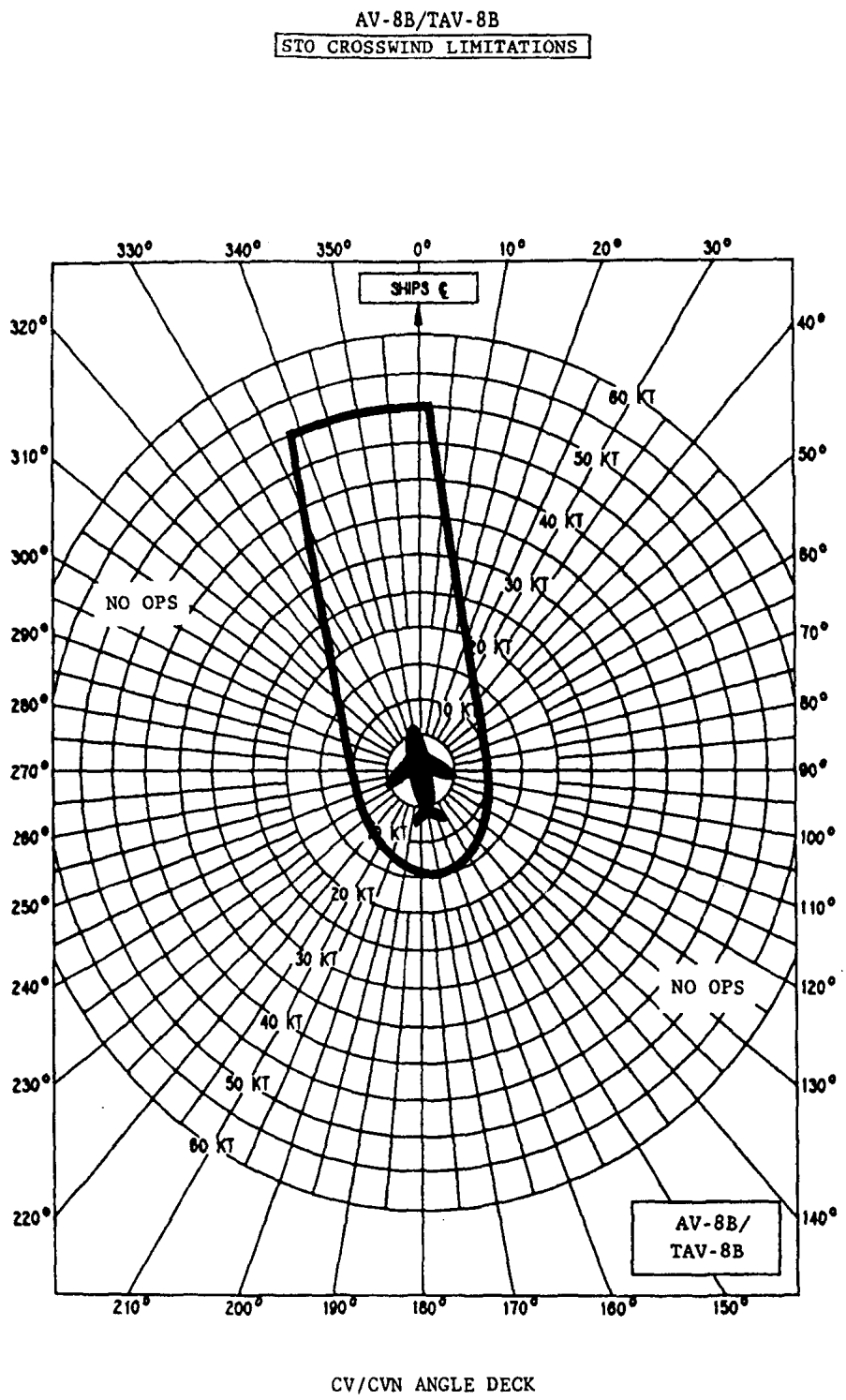

Figure D-2. AV-8B/TAV-8B CV Spot 1 VTO

SHIP WOD SPOT LIMITATIONS

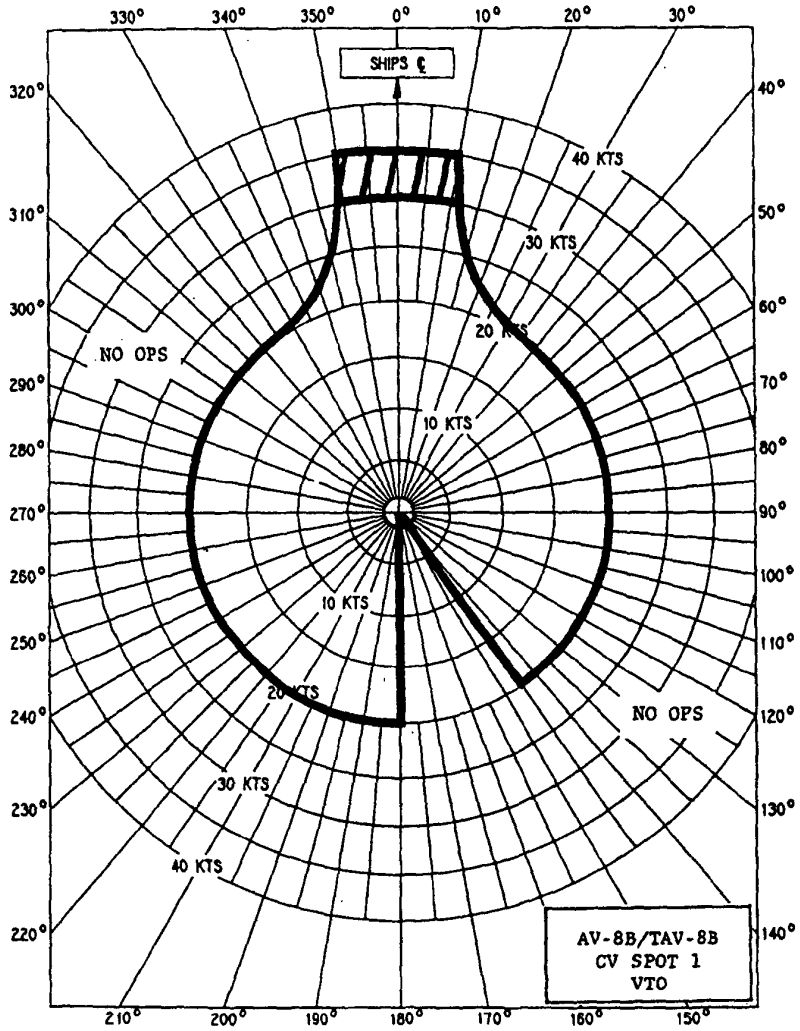

NOTES: (1) SHIP WOD LIMITATIONS ARE BASED ON SHIP SUPERSTRUCTURE INDUCED TURBULENCE, AIRCRAFT CROSSWIND LIMITS, AND ADEQUACY OF VISUAL REFERENCES.
(2) DAY ONLY.
(3) MAXIMUM CROSSWIND COMPONENT 15 KNOTS FOR AV-8B, AND 10 KNOTS FOR TAV-8B.
(4) IN CROSSHATCHED AREA, NO CROSSWIND IS ALLOWED. AIRCRAFT SHALL BE POINTED INTO RELATIVE WIND.
(5) APPLY 25-KNOT WOD PERFORMANCE CORRECTION TO VTO WEIGHT FOR VTO OPERATIONS WITH CROSSWIND COMPONENTS GREATER THAN 10 KNOTS.

Figure D-3. AV-8B/TAV-8B CV Spot 2 VTO

SHIP WOD SPOT LIMITATIONS

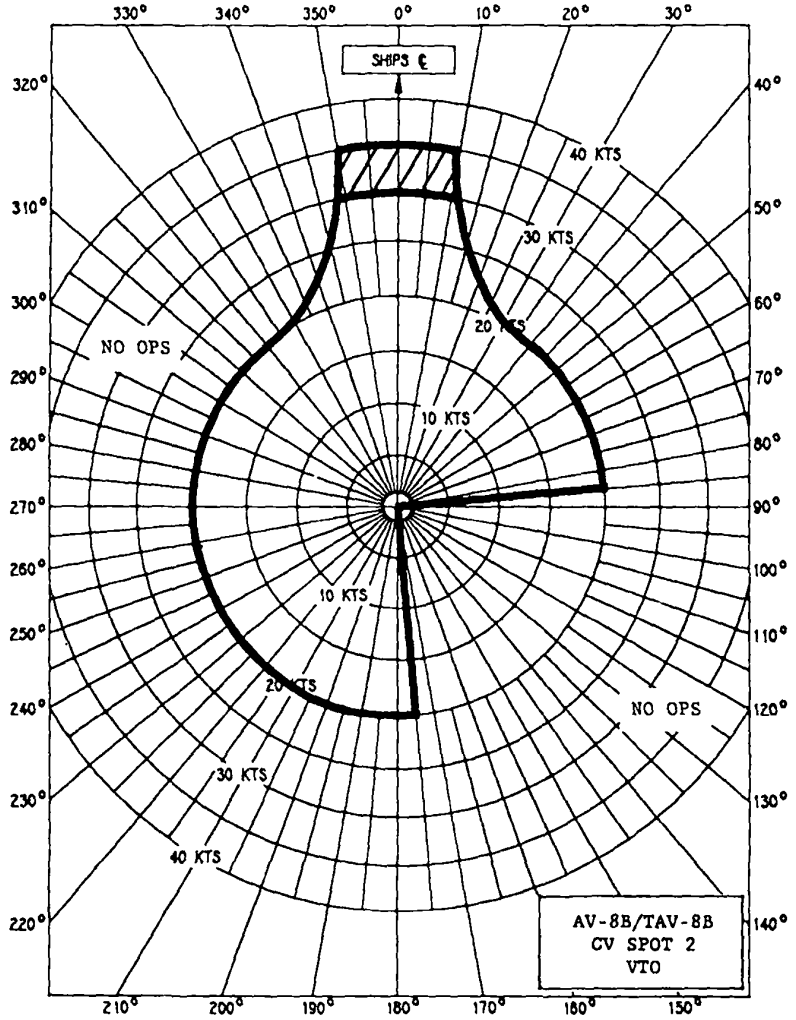

NOTES: (1) SHIP WOD LIMITATIONS ARE BASED ON SHIP SUPERSTRUCTURE INDUCED TURBULENCE, AIRCRAFT CROSSWIND LIMITS, AND ADEQUACY OF VISUAL REFERENCES.
(2) DAY ONLY.
(3) MAXIMUM CROSSWIND COMPONENT 15 KNOTS FOR AV-8B, AND 10 KNOTS FOR TAV-8B.
(4) IN CROSSHATCHED AREA, NO CROSSWIND IS ALLOWED. AIRCRAFT SHALL BE POINTED INTO RELATIVE WIND.
(5) APPLY 25-KNOT WOD PERFORMANCE CORRECTION TO VTO WEIGHT FOR VTO OPERATIONS WITH CROSSWIND COMPONENTS GREATER THAN 10 KNOTS.

Figure D-4. AV-8B/TAV-8B CV Spots 3 and 4 VTO

SHIP WOD SPOT LIMITATIONS

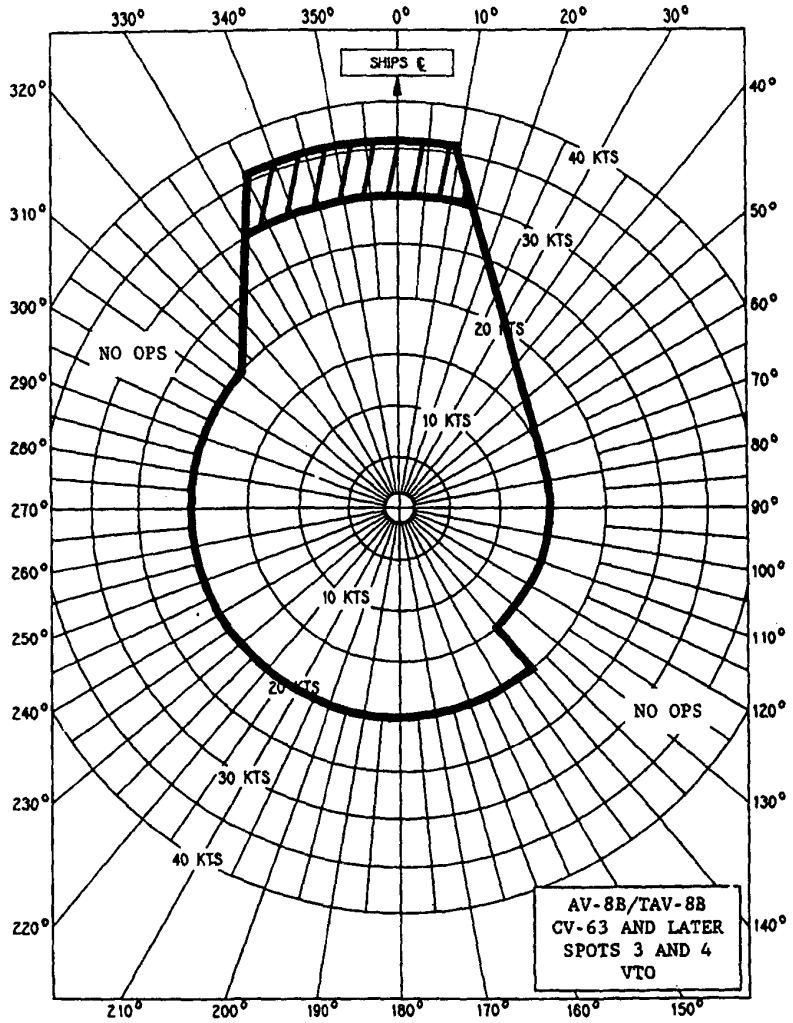

NOTES: (1) SHIP WOD LIMITATIONS ARE BASED ON SHIP SUPERSTRUCTURE INDUCED TURBULENCE, AIRCRAFT CROSSWIND LIMITS, AND ADEQUACY OF VISUAL REFERENCES.
(2) DAY ONLY.
(3) MAXIMUM CROSSWIND COMPONENT 15 KNOTS FOR AV-8B, AND 10 KNOTS FOR TAV-8B.
(4) IN CROSSHATCHED AREA, NO CROSSWIND IS ALLOWED. AIRCRAFT SHALL BE POINTED INTO RELATIVE WIND.
(5) APPLY 25-KNOT WOD PERFORMANCE CORRECTION TO VTO WEIGHT FOR VTO OPERATIONS WITH CROSSWIND COMPONENTS GREATER THAN 10 KNOTS.

Figure D-5. AV-8B/TAV-8B CV Spot 1 VL

SHIP WOD SPOT LIMITATIONS

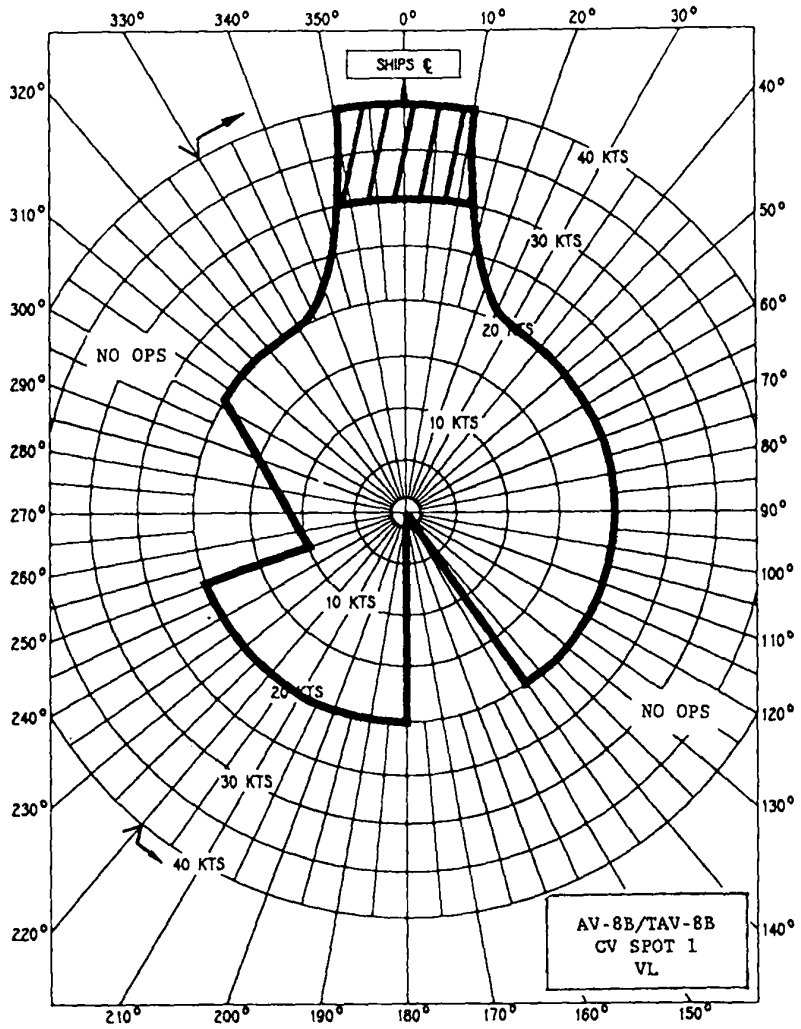

NOTES: (1) SHIP WOD LIMITATIONS ARE BASED ON SHIP SUPERSTRUCTURE INDUCED TURBULENCE, AIRCRAFT CROSSWIND LIMITS, AND ADEQUACY OF VISUAL REFERENCES.
(2) VISUAL REFERENCE LIMITS ARE INDICATED BY ⋁⟶.
(3) DAY ONLY.
(4) MAXIMUM CROSSWIND COMPONENT 15 KNOTS FOR AV-8B, AND 10 KNOTS FOR TAV-8B.
(5) DAY CROSS-AXIAL APPROACHES ARE PERMITTED TO THIS SPOT.
(6) IN CROSSHATCHED AREA, NO CROSSWIND IS ALLOWED. AIRCRAFT SHALL BE POINTED INTO RELATIVE WIND.
(7) VL WITH TAV-8B AIRCRAFT SHALL BE PERFORMED ONLY FROM THE FRONT COCKPIT, EXCEPT IN EMERGENCY.
(8) FOR TAV-8B AIRCRAFT, A 500-POUND REDUCTION IN VL WEIGHT IS REQUIRED.
(9) APPLY 25-KNOT WOD PERFORMANCE CORRECTION TO VL WEIGHT FOR VL OPERATIONS WITH CROSSWIND COMPONENTS GREATER THAN 10 KNOTS.

Figure D-6. AV-8B/TAV-8B CV Spot 2 VL

SHIP WOD SPOT LIMITATIONS

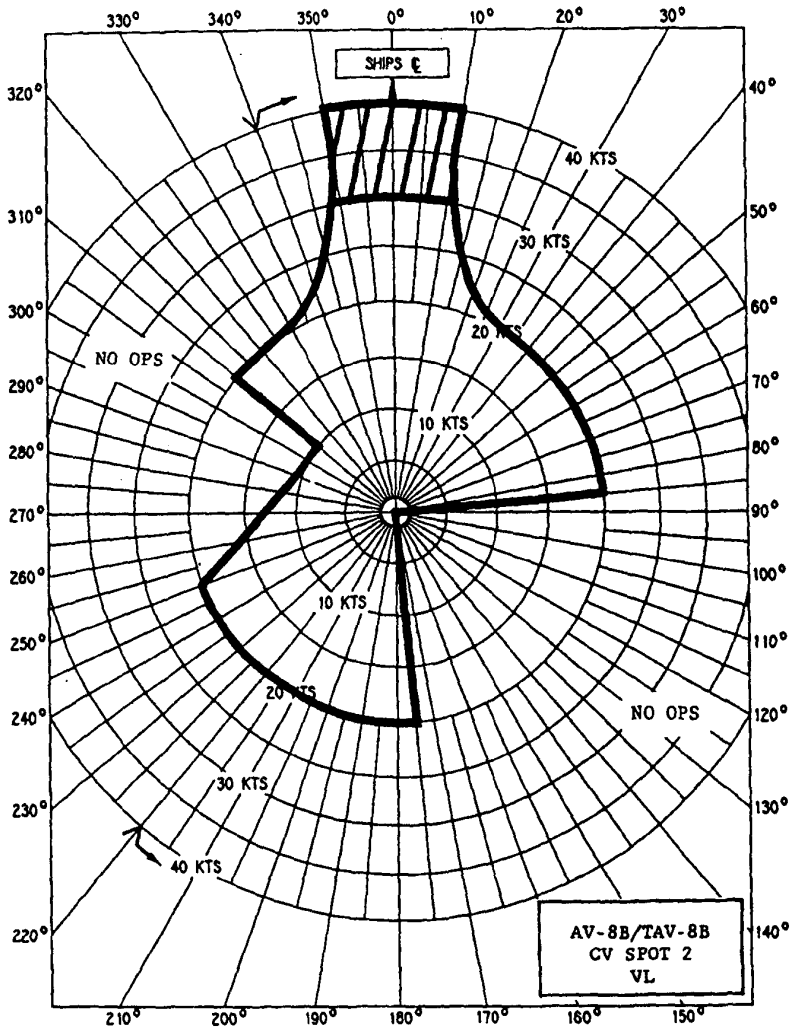

NOTES: (1) SHIP WOD LIMITATIONS ARE BASED ON SHIP SUPERSTRUCTURE INDUCED TURBULENCE, AIRCRAFT CROSSWIND LIMITS, AND ADEQUACY OF VISUAL REFERENCES.
(2) VISUAL REFERENCE LIMITS ARE INDICATED BY ✓——►.
(3) DAY ONLY.
(4) MAXIMUM CROSSWIND COMPONENT 15 KNOTS FOR AV-8B, AND 10 KNOTS FOR TAV-8B.
(5) IN CROSSHATCHED AREA, NO CROSSWIND IS ALLOWED. AIRCRAFT SHALL BE POINTED INTO RELATIVE WIND.
(6) VL WITH TAV-8B AIRCRAFT SHALL BE PERFORMED ONLY FROM THE FRONT COCKPIT, EXCEPT IN EMERGENCY.
(7) FOR TAV-8B AIRCRAFT, A 500-POUND REDUCTION IN VL WEIGHT IS REQUIRED.
(8) APPLY 25-KNOT WOD PERFORMANCE CORRECTION TO VL WEIGHT FOR VL OPERATIONS WITH CROSSWIND COMPONENTS GREATER THAN 10 KNOTS.

Figure D-7. AV-8B/TAV-8B CV Spots 3 and 4 VL

SHIP WOD SPOT LIMITATIONS

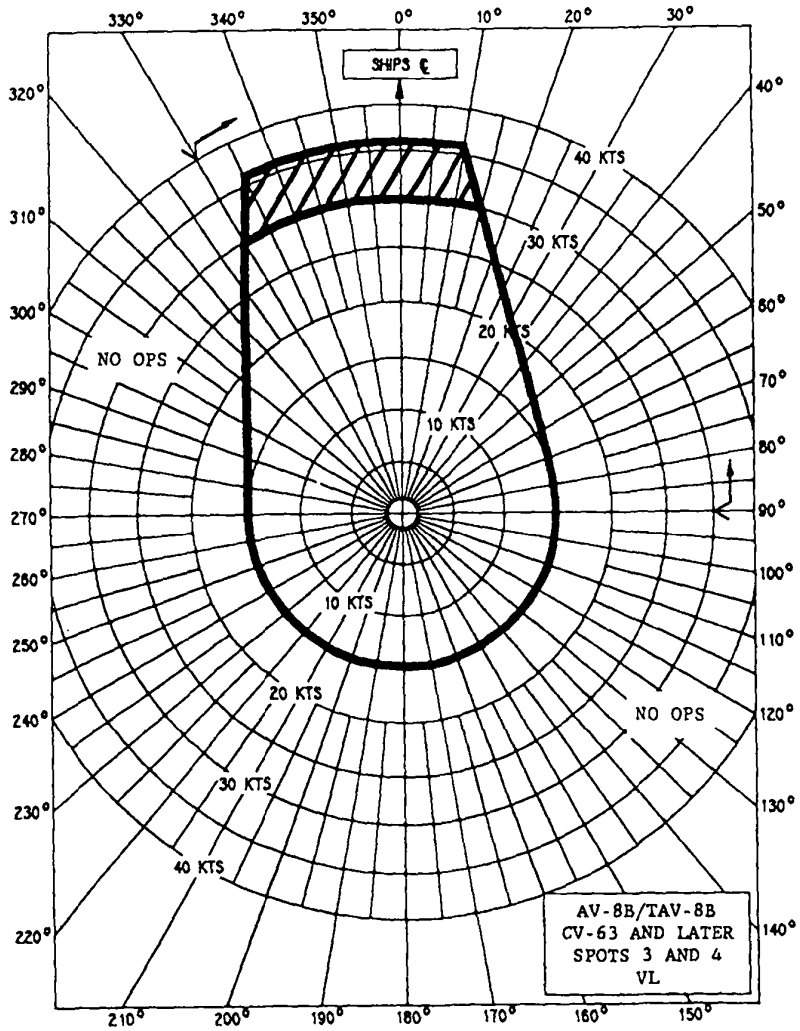

NOTES: (1) SHIP WOD LIMITATIONS ARE BASED ON SHIP SUPERSTRUCTURE INDUCED TURBULENCE, AIRCRAFT CROSSWIND LIMITS, AND ADEQUACY OF VISUAL REFERENCES.
(2) VISUAL REFERENCE LIMITS ARE INDICATED BY ⟨⟶.
(3) DAY ONLY.
(4) MAXIMUM CROSSWIND COMPONENT 15 KNOTS FOR AV-8B, AND 10 KNOTS FOR TAV-8B.
(5) IN CROSSHATCHED AREA, NO CROSSWIND IS ALLOWED. AIRCRAFT SHALL BE POINTED INTO RELATIVE WIND.
(6) VL WITH TAV-8B AIRCRAFT SHALL BE PERFORMED ONLY FROM THE FRONT COCKPIT, EXCEPT IN EMERGENCY.
(7) FOR TAV-8B AIRCRAFT, A 500-POUND REDUCTION IN VL WEIGHT IS REQUIRED.
(8) APPLY 25-KNOT WOD PERFORMANCE CORRECTION TO VL WEIGHT FOR VL OPERATIONS WITH CROSSWIND COMPONENTS GREATER THAN 10 KNOTS.

Figure D-8. AV-8B CV/CVN Spot 3 Night VTOL

SHIP WOD SPOT LIMITATIONS

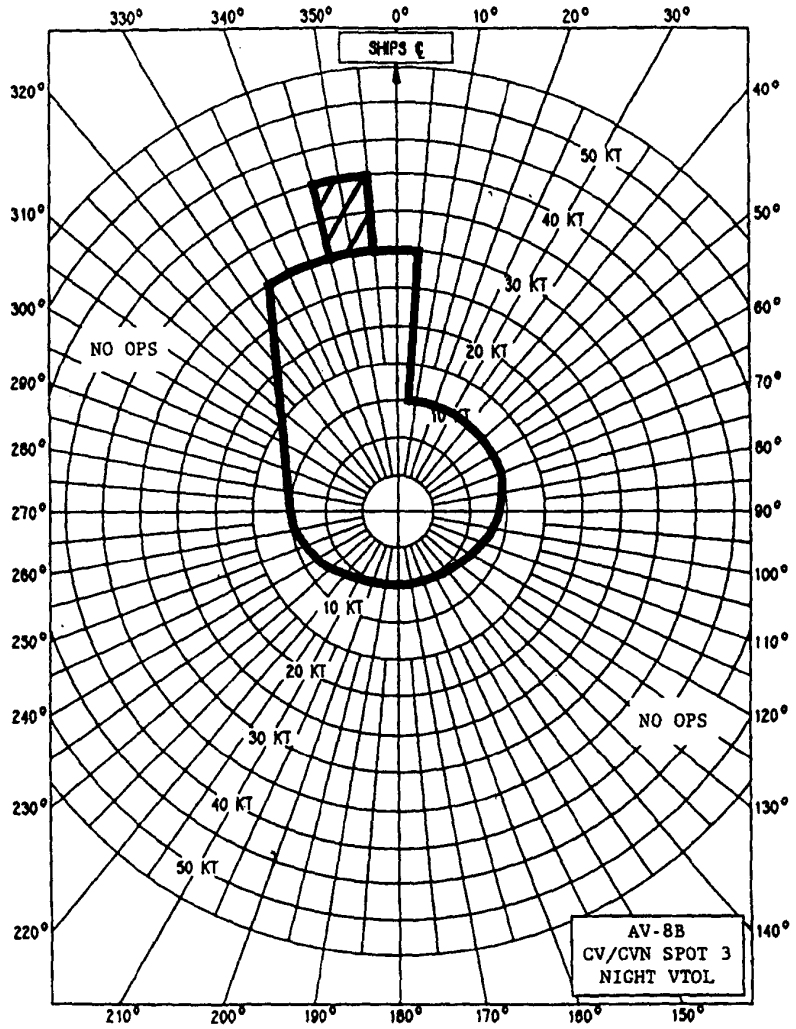

NOTES: (1) SHIP WOD LIMITATIONS ARE BASED ON SHIP SUPERSTRUCTURE INDUCED TURBULENCE, AIRCRAFT CROSSWIND LIMITS, AND ADEQUACY OF VISUAL REFERENCES.
(2) MAXIMUM RECOMMENDED DECK MOTION IS ±1 DEGREE PITCH AND/OR ±4 DEGREES ROLL.
(3) ALL LANDINGS MUST BE PERFORMED WITH THE AIRCRAFT ALIGNED WITH THE ANGLE DECK CENTERLINE.
(4) MAXIMUM CROSSWIND COMPONENT 10 KNOTS.
(5) NIGHT ONLY.
(6) IN CROSSHATCHED AREA, NO CROSSWIND IS ALLOWED. AIRCRAFT SHALL BE POINTED INTO RELATIVE WIND.
(7) NIGHT OPERATIONS WITH TAV-8B AIRCRAFT ARE PROHIBITED.

INDEX

Page No.

A

Abort/Strikedown 7-9
ADDITIONAL REQUIREMENTS 2-1
AIR TRANSFER OFFICER 3-9
Aircraft:
- Aircraft Alone 6-17
- Aircraft Configuration 8-19, 9-14
- Aircraft in Company 6-18
- Alert Aircraft Requirements 5-30
- COD Aircraft Starboard Holding 6-2
- COD/VOD Aircraft 5-1
- Downed Aircraft 5-30
- Fixed Wing Aircraft Readiness Conditions 5-31
- Fixed Wing Condition Aircraft 5-31
- Fixed-Wing Aircraft 6-24–6-25
- Jet/Turboprop Aircraft 6-6
- Jet/Turboprop Aircraft Port Holding/Spin Pattern 6-2
- Launch of Condition Fixed Wing Aircraft 5-32
- Maintenance on Loaded Aircraft 7-8
- Manning Aircraft 5-1
- Removing Aircraft from Catapults 5-26, 5-29
- Standby Aircraft 5-30
- Taxiing/Spotting Aircraft on Catapults 5-3, 5-14
- Tensioning Aircraft 5-5, 5-16
- Visual Signals to Aircraft From Ship Under EMCON or Lost Communication Conditions 6-26
- Visual Signals to Ship From Aircraft With Radio Failure 6-25

Alert:
- Alert Aircraft Requirements 5-30

Approach:
- Approach Minimums 6-9
- Approach Weather Minimums 8-12, 9-9
- Communication or NAVAID Failure During Approach 6-17
- Compulsory Arrival, Marshal, and Approach Voice Reports 6-18
- Downwind Leg and Approach Turn 6-3
- Failure of Carrier Navigation Aids/CATCC Radars Prior to Approach 6-18
- Instrument Approach Procedures 6-9
- Nonprecision Approach 8-12, 9-9

Approaches:
- En Route Radar Approaches 6-7
- Instrument Approaches 6-14
- NVD Aided Approaches 8-17

ARMAMENT 8-17
Arming 7-5
Arrival Information 6-1
ARRIVAL PROCEDURES 6-1

B

Bow-On-Recovery 6-7
BRIEFING 3-7

C

CARRIER QUALIFICATIONS 5-22
Case I 9-5
CASE I 6-1
Case I and Case II 8-3
Case I Departure 5-34, 9-3
Case I Rendezvous 5-34
CASE I/II 6-26
Case II 9-7
CASE II 6-6
Case II Departure 5-34, 9-3
Case II/III Rendezvous 5-35
Case III 6-26, 8-3, 9-7
CASE III 6-6
Case III Departure 5-34, 9-3
CATCC 4-5
CDC 4-5
CHANGES IN PILOT OR AIRCRAFT ASSIGNMENTS 3-9

Command:
- NATOPS Cognizant Command 1-2

COMMANDING OFFICERS 1-2
COMMUNICATION CONTROL 4-5

Communication:
- Communication or NAVAID Failure During Approach 6-17
- Communication Security 4-6
- Day Communication Emergencies 6-26
- Departure Communication Procedures 5-33
- Night Communication Emergencies 6-26
- Visual Signals to Aircraft From Ship Under EMCON or Lost Communication Conditions 6-26
- Voice Communication Procedures 6-18

Communications:
- Lost Communications 8-4, 9-4
- Lost Communications During Departures 5-33

Condition I 8-8
Condition II 8-8

Page No.

Condition III 8-8
Condition IV 8-9
CONTROL CRITERIA 4-2
CONTROL OF DEPARTING AIRCRAFT 5-32
Control:
Advisory Control 4-2
Control Authority 8-7
Control of Radio Circuits 4-5
Control of the VFR Day Fixed Wing Carrier Landing Pattern 6-23
Degrees of Control 4-2
Electronic Emission Control 4-3
Entering the Carrier Control Area 6-1
Fuel Transfer and Dump Control 6-34
Initial Control Responsibility 4-6
Monitor Control 4-3
Nonradar Control 4-3
Positive Control 4-2
Correcting to the Final Bearing 6-13
Crew:
Catapult Crew Debrief 5-22
Crewmembers:
Flight Crewmembers 2-2
Criteria:
Rescue Helicopter Criteria 8-9
CV NATOPS PROGRAM MANAGEMENT ASSIGNMENTS 1-1

D

Dearming 7-7, 8-17
Debrief:
Catapult Crew Debrief 5-22
DECK LAUNCHING 5-21
Deck:
Flight Deck Procedures 6-21
Wearing of Flight Deck Uniforms 3-2
Departing Marshal 6-8
Departure Radials 5-32
Detachments 8-4
DIVERSION OF AIRCRAFT 6-35
DOWNED AND STANDBY AIRCRAFT 5-30
Drag 6-5

E

Electronic:
Electronic Emission Control 4-3
Emergencies:
Carrier Pattern Emergencies 6-26
Day Communication Emergencies 6-26
Instrument Emergencies 8-13, 9-10
Night Communication Emergencies 6-26

Page No.

EMERGENCY ACTIONS AND PROCEDURES 5-22
EMERGENCY AFTER LAUNCH 5-30
EMERGENCY CONTROL PROCEDURES 4-6
EMERGENCY LANDING 6-25
Emergency Procedures:
Emergency Procedures 7-9
EMERGENCY SIGNALS 6-25
Emergency:
Emergency Landing 8-13, 9-10
Emergency Marshal Fixes 6-7
Emergency Procedures 7-9
Procedures Under Emergency Conditions 5-25, 5-28
Engine:
Engine Start and Turnup 5-2
Engines:
Starting Engines 8-1, 9-1
Entry:
Landing Pattern Entry 6-3
Equipment:
Aqueous Film Forming Foam (AFFF) System and Mobile Firefighting Equipment 3-2

F

Failure:
Communication or NAVAID Failure During Approach 6-17
Failure of Carrier Navigation Aids/CATCC Radars Prior to Approach 6-18
Visual Signals to Ship From Aircraft With Radio Failure 6-25
Fixed-Wing Departures/Rendezvous 5-34
Fixed-Wing IMC at Altitude 5-35
FLIGHT PLANS AND ADVISORIES 3-8
FLIGHT QUARTER STATIONS 3-2
Frequency/IFF/SIF Changes 6-9
Fuel:
Fuel Transfer and Dump Control 6-34
Functional Check Flights 8-4, 9-1

G

General Instructions 6-8, 9-9
Groove and Touchdown 6-3
GROUND OPERATIONS 8-1
Ground:
Ground operations 9-1

H

HELICOPTER CARRIER QUALIFICATION LANDINGS 8-16
Helicopter Holding 8-10

Page No.

Helicopter Readiness Conditions 8-8
Hung Dome 8-18
Hung Ordnance 8-18
Hung/Unexpended Weapons 7-6

I

In-Flight:
  In-Flight Procedures 7-6
Initial Separation 6-8
Instrument:
  Instrument Approach Procedures 6-9
  Instrument Approaches 6-14
  Instrument Emergencies 8-13, 9-10
  Instrument Recoveries 8-12

L

Landing:
  Control of the VFR Day Fixed Wing Carrier Landing Pattern 6-23
  Departing Marshal and Landing 9-9
  Emergency Landing 8-13, 9-10
  Landing Pattern Departure 6-3
  Landing Pattern Entry 6-3
  Landing Pattern Upwind Leg 6-3
  Landing Signal Officer 4-1
  Landing Signalman Enlisted 4-1
  VFR Day Fixed Wing Carrier Landing Pattern 6-3
  VFR Day Tiltrotor Carrier Landing Pattern 9-6
Lateral Separation 4-4
LAUNCH 8-1
Launch:
  Aborting the Launch 5-23
  FCF Launch procedures 5-30
  Final Preparations for Launch 5-3
  Intent to Launch Weapons 7-5
  Launch 5-7, 5-18
  Launch and Recovery Wind Envelope Features C-1
  Launch Complete 5-13, 5-20
  Launch Frequencies 5-33
  Launch of Condition Fixed Wing Aircraft 5-32
  Launch of Condition Helicopters 8-9
  Launch Procedures 8-2, 9-2
  Prior to Launch 8-1
LAUNCH/DEPARTURE 9-1
LAUNCHING AIRCRAFT (CONVENTIONAL/ICCS DECKEDGE MODE) 5-3
LAUNCHING AIRCRAFT (ICCS) 5-14
LAUNCHING FIXED-WING AIRCRAFT 5-2
Lighting:
  CVN Lighting for Helicopter NVD Operations 8-16
  CVN Lighting for Tiltrotor NVD Operations 9-13
Limit:
  Wind Limit Orientation C-2
Limitations:
  External Cargo Limitations 8-19, 9-14
LOGISTICS 8-19, 9-14
LSE Calls 9-1
LSE/PC Calls 8-1
LSO (Under the Supervision of the Air Officer) 6-23

M

Marshal Airspeed 6-7, 9-8
Marshal Altitude Assignment 6-7
Marshal Altitude Separation 6-7
Marshal Instructions 6-7, 9-8
Missed Approach/Waveoff/Bolter 6-16
Mission:
  Rescue Helicopter Mission Information 8-9
Mode:
  PALS Mode III Procedures 8-12
Monitor:
  Monitor Control 4-3
Movement:
  Weapon Movement 7-2

N

NATOPS Advisory Group 1-2
NATOPS PRODUCT SET 1-1
Navigation:
  Failure of Carrier Navigation Aids/CATCC Radars Prior to Approach 6-18
NIGHT OPERATIONS 8-16, 9-13
Night:
  Night Communication Emergencies 6-26
  Night EMCON Procedures 8-17, 9-13
  Night EMCON Recovery 6-17
NIGHT/CASE III OPERATIONS 5-21
Night/Instrument Meteorological Conditions 5-30
NVD Aided Approaches/Departures 9-13

O

Officer:
  Air Officer 4-1, 6-23
  Air Operations Officer 4-1
  Combat Direction Center Officer 4-2
  Landing Signal Officer 4-1
  Operations Officer 4-1
  Preliminary Procedures — Air Officer 3-3
Operations:
  Air Operations Officer 4-1

Page No.

Close Proximity Operations 3-8
CVN Day/NVD V-22 STO Operations C-2
CVN Lighting for Helicopter NVD Operations 8-16
CVN Lighting for Tiltrotor NVD Operations ... 9-13
F-35C Weapons Concept of Operations 7-4
Operations Officer 4-1
Ordnance Arming 5-3
OTHER RELATED PUBLICATIONS 1-2
Overhead Marshal 6-7, 9-8

P

PASSENGER TRANSFERS 3-10
Penetration/Approach 6-9
Personnel:
All Personnel 2-2
Maintenance Personnel 2-2
Ordnance Personnel 2-3
Phraseology 6-19
Pilots 4-1
Plane Captains 2-2
PLANE GUARD 8-4
POST-LAUNCH PROCEDURES 5-22
PREDEPLOYMENT LECTURE SYLLABUS 2-2
PRELAUNCH PROCEDURES 5-1
Preparation:
Preparation for Recovery 6-19
PriFly 4-5
Procedures:
Arrival Procedures 9-5
Basic Procedures 4-6
Delta Procedures 6-16
Departure Communication Procedures 5-33
Departure Procedures 8-3, 9-2
Emergency Procedures 7-9
Flight Deck Procedures 6-21
In-Flight Procedures 7-6
Instrument Approach Procedures 6-9
Launch Procedures 8-2, 9-2
Marshal Procedures 6-6, 9-8
Night EMCON Procedures 8-17, 9-13
PALS Mode III Procedures 8-12
Preliminary Procedures — Air Officer 3-3
Preliminary Procedures — CATCC 3-2
Procedures Under Emergency Conditions 5-25, 5-28
Radar Handoff Procedures 6-18
Recovery Procedures 8-10
Recovery Tanker Procedures 6-26
Rendezvous Procedures 6-27
Shipboard Procedures 7-7
Signals and Procedures 5-23, 5-26

Page No.

Voice Communication Procedures 6-18
Voice Procedures 4-5
Purpose A-1, B-1, D-1
PurposE C-1
PURPOSE 1-1

Q

QUESTIONS AND COMMENTS ON WIND ENVELOPES D-1

R

Radio:
Control of Radio Circuits 4-5
Recording of Radio Circuits 4-5
Visual Signals to Ship From Aircraft With Radio Failure 6-25
Recoveries:
Instrument Recoveries 8-12
RECOVERING FIXED-WING AIRCRAFT 6-19
recovery 9-5
RECOVERY 8-10
Recovery:
Launch and Recovery Wind Envelope Features C-1
Preparation for Recovery 6-19
Recovery (Case III) 6-34
Recovery Procedures 8-10
Recovery Tanker Procedures 6-26
Recovery Tanking Pattern 6-34
Rendezvous (Day and Night) 6-27
Rendezvous High/On Top (Day and Night) 6-27
Reports:
Case III Departure Voice Reports 5-33
Compulsory Arrival, Marshal, and Approach Voice Reports 6-18
Low Visibility Voice Reports 6-5
Voice Reports 6-5
Requirements:
Alert Aircraft Requirements 5-30
SAR Requirements 8-8
RESCUE HELICOPTER OPERATIONS 8-9
RESPONSIBILITIES 4-1
Responsibility:
Initial Control Responsibility 4-6
RESPOT FORWARD 5-30
Restrictions:
Restrictions 8-7

S

Safety Precautions 8-1, 8-4, 8-12
SAFETY PRECAUTIONS 8-13, 9-10
SAR Response 8-7

Page No.

SCOPE 1-1
SEPARATION CRITERIA 4-4
SHIP HELICOPTER INTEROPERABILITY REFERENCE TABLE C-1
Single-Frequency Departures 5-33
Special Clothing 3-2
SPECIAL PROCEDURES FOR CARRIER QUALIFICATION LANDING 6-24
Special Safety Precautions 6-21
Station:
  Plane Guard Station 8-7
SUSPEND (Conventional/Deckedge Mode) 5-23
SUSPEND (ICCS) 5-26
System:
  Aqueous Film Forming Foam (AFFF) System and Mobile Firefighting Equipment 3-2

T

Takeoff:
  Short Takeoff 9-3
  Vertical Takeoff 9-2
TANKER OPERATIONS 6-26
THE AIR PLAN 3-1
THE CONTENTS OF THIS PUBLICATION 1-1
The Ordnance Load Plan 3-2
TILTROTOR CARRIER QUALIFICATION (CQ) LANDINGS 9-12
Tiltrotor Holding 9-6
TRAINING 1-3
TRAINING REQUIREMENTS 2-1
Transient Helicopters 8-10

U

Unit:
  NATOPS Model Manager Unit 1-1
USE OF NOTES IN WIND ENVELOPES D-1

V

Vertical Separation 4-4
Visual Meteorological Conditions 5-30

W

WAIVERS 1-3
Waveoff 8-12, 9-10
Waveoffs 6-3, 9-6
WEAPON HANDLING PROCEDURES 7-1
Weapon:
  Weapon Definitions 7-1
  Weapon Loading/Downloading 7-3
  Weapon Movement 7-2
Weapons:
  F-35C Weapons Concept of Operations 7-4
  Intent to Launch Weapons 7-5
Weather 8-1, 9-1
Weight:
  Weight Chits 5-1
Wind:
  Launch and Recovery Wind Envelope Features C-1
  Other Sources Of Helicopter Wind Envelopes C-3
  Questions and Comments On Wind Envelopes C-3
  Use Of Notes In Wind Envelopes C-3
  Wind Limit Orientation C-2
Wing:
  Control of the VFR Day Fixed Wing Carrier Landing Pattern 6-23
  Fixed Wing Aircraft Readiness Conditions 5-31
  Fixed Wing Condition Aircraft 5-31
  Launch of Condition Fixed Wing Aircraft 5-32
  VFR Day Fixed Wing Carrier Landing Pattern 6-3

Z

ZIP LIP 6-5