WA3019
10 A
~~5/19/15~~
5-1-2015

Workplan

Installation of Oxygen Infusers and Rehabilitation of Recirculation Trench

Former J.H. Baxter & Co. Wood Treating Facility
Arlington, Washington

Prepared for

U.S. Environmental Protection Agency
Region 10
1200 Sixth Avenue
Seattle, WA 98101

Submitted by

J.H. Baxter Team
P.O. Box 10797
Eugene, OR 97440

Received
MAY 22 2015
Office of Air, Waste & Toxics

FILE COPY

May 2015

Prepared by

GSI Water Solutions, Inc.
55 SW Yamhill Street, Suite 300 Portland, OR 97204
P: 503.239.8799 F: 503.239.8940
info@gsiws.com www.gsiws.com

1. **Introduction** 1
2. **Remedial Action Pilot Study** 1
   2.1 Current Operations 1
3. **Proposed Actions** 2
   3.1 Scope of Work 2
4. **Schedule** 3
5. **References** 4

Figures

Figure 1 Site Vicinity Map

Figure 2 ISOC Installation Schematic and Layout

Figure 3 Geotechnical Boring Placement

Figure 4 Cross Section of Geotechnical Boring Installation

1. Introduction

The J.H. Baxter Team, consisting of J.H. Baxter & Co. (Baxter) and GSI Water Solutions, Inc. (GSI), has prepared this *Workplan for the Installation of Oxygen Infusers and Rehabilitation of the Recirculation Trench* (Workplan) for the Stella-Jones (formerly Baxter) Arlington, Washington, wood treating facility (Arlington facility, facility, or Site) located at 6520 188th Street NE (Figure 1). This workplan has been prepared for the U.S. Environmental Protection Agency (EPA) to document proposed improvements to the ongoing Remedial Action Pilot Study at the Arlington facility.

The Remedial Action Pilot Study is considered to be part of the ongoing Corrective Measures Study (CMS), which is being implemented pursuant to Paragraph 53 of the EPA Administrative Order on Consent (AOC) dated April 30, 2001 (EPA, 2001). CMS-related activities were conducted consistent with guidance provided by EPA in the Resource Conservation and Recovery Act (RCRA) Corrective Action Plan (Final), dated May 1994 (EPA, 1994), Corrective Actions Advance Notice of Proposed Rulemaking (EPA, 1996), and the AOC.

This workplan proposes to rehabilitate the recirculation trench and install iSOC (in situ submerged oxygen curtain technology) gas infusion units into three existing wells at the Arlington facility to augment the effectiveness of the Remedial Action Pilot Study.

2. Remedial Action Pilot Study

The Remedial Action Pilot Study was designed to enhance in situ bioremediation and passive recovery of light non-aqueous phase liquid (LNAPL). This includes an extraction well network, infiltration trench, recovery wells, and monitoring well network (Figure 2). The pilot study installation was completed in January 2008.

The purpose of the enhanced in situ bioremediation (the recirculation system) is to increase groundwater pH and dissolved oxygen levels for favorable conditions for biodegradation of pentachlorophenol (PCP). The recirculation system uses seven extraction wells to extract affected groundwater, which is pumped in an infiltration trench upgradient of the extraction wells. The infiltration trench is composed of crushed limestone, which increases the pH of the affected groundwater when contact is made. Additionally, LNAPL is passively recovered in five recovery wells with the installation of sorbent socks.

2.1 Current Operations

The only extraction wells operating at the beginning of the fourth quarter in 2014 were EW-2 and EW-4. All of the extraction wells were turned on at the beginning of the fourth quarter 2014, but each extraction well, except EW-2 and EW-4, was triggered almost immediately to shut down because of its high-water-level alarm (Baxter, 2015).

GSI conducted a Site visit in April, 2015 to assess the wells and recirculation system. The wells, pumps and associated piping appears to be in good condition. The recirculation

trench is believed to be fouled, likely around the edges of the trench in the native material. The flows from the wells have been mechanically restricted to very low flow rates which are causing unnecessary back-pressure on the pumps.

LNAPL is passively absorbed and extracted using sorbent socks from five source area wells: MW-12, MW-13, MW-19, MW-20, and MW-21. Based on manufacturer's literature, each sorbent sock is able to absorb 2 pounds of LNAPL. All of the sorbent socks in the recovery wells were inspected during the fourth quarter monitoring event. Based on visual assessment, only the sorbent sock in MW-12 needed to be replaced (Baxter, 2015). The used sorbent socks are to be disposed of offsite along with the waste produced by Stella-Jones. The sorbent socks will continue to be periodically inspected and replaced as necessary.

3. Proposed Actions

The Baxter proposes to conduct rehabilitation activities within the existing recirculation system's injection trench as well as install iSOC units within downgradient intermediate monitoring wells. These proposed actions will enhance the effectiveness of the Remediation Pilot Study's bioremediation strategy.

The purpose of the rehabilitation is to return the system into operation and extend the life of the system. The trench rehabilitation will consist of drilling geotechnical borings within the trench and backfilling with crushed limestone rock. The new borings will allow for a greater pressure head to improve drainage through the trench even with minor fouling. In addition, the vertical orientation of the borings also increases the chance of intersecting highly permeable zone in the native soils. By installing geotechnical borings, we avoid destruction of the current piping and high water alarm system while providing more area for discharge as well as a greater pressure head for infiltration.

The purpose of the iSOC installation is to extend the existing aerobic bioremediation system into the downgradient area of the pentachlorophenol (PCP) plume. The iSOCs will be installed in three existing intermediate wells (MW-39, MW-40, and MW-41). The iSOC units diffuse oxygen into the groundwater and thereby stimulating the growth of indigenous aerobic microbes that breakdown PCPs.

3.1 Scope of Work

Our proposed approach consists of the following key steps. Some of these activities may be done concurrently, however they are generally presented in the order that they will be performed.

1. **Planning and procurement of materials and subcontractor.** This task will include the procurement and assembly of the iSOC-to-gas cylinder piping, and procurement of a drilling subcontractor to modify the flush-mount vaults and install the geotechnical (infiltration) borings. This task also includes coordination with Stella Jones or the current facility operator.

2. **iSOC installation:**

i. A licensed well driller will replace the existing vaults with larger flush-mount vaults at three wells MW-39, MW-40, and MW-41 (see Figure 2). The well vaults will be of the approximate dimensions 2'x2'x2' or of sufficient dimensions to house the iSOC equipment.
ii. This will be followed by the installation of the iSOC units into the wells and the placement of the tubing, pressure regulators, and gas cylinders into the new vaults. Figure 2 shows both the proposed locations of the iSOC installation and a typical profile of the iSOC piping and equipment.

3. **Recirculation trench rehabilitation:**
   i. The extraction well network will be shut down for the duration of the work.
   ii. The Baxter team will retain a private utility locating company to positively identify piping within the infiltration trench as well as any utilities within the vicinity of the trench.
   iii. Using a licensed driller, a series of geotechnical borings will be emplaced within the existing trench to provide outlet and greater head to gravity fed infiltration. The borings will be eight inch to one foot in diameter and to approximate depths of 15 feet. As many as 10 to 12 borings will be installed within the existing trench, see Figure 3. Some of the existing distribution piping will be altered to terminate at the head of each boring.
   iv. The borings will be backfilled with crushed limestone of 1"-1.5" to the top of the infiltration trench porous media, approximately 3' bgs (see Figure 4). An intermediate pebble rock will be laid atop the crushed limestone and the remainder of the excavation will be sealed with a concrete mixture to be brought to an elevation level with ground surface.
   v. The boring cuttings will be temporarily stored on-site for waste characterization prior to disposal at an appropriate disposal facility.
   vi. The system will be restarted following the completion of the boring installations, initially with the operation of extraction wells EW-2 and EW-4. This will be followed by a troubleshooting period with the gradual inclusion of more extraction wells as the infiltration trench's new capacity is assessed.

4. **Monitoring.** Following completion of the proposed work, subsequent site visits will be planned to monitor the effectiveness of the rehabilitation trench modifications and the installed iSOC units. The number and frequency of site visits will depend upon observed site conditions.

5. **Reporting.** A short report documenting the work will be prepared and included as part of the ensuing quarterly monitoring report.

4. Schedule

Upon approval of the proposed workplan, the Baxter team will begin the process of mobilizing necessary resources and selecting contractors. The proposed work is anticipated to be conducted in July or August, 2015. The duration of the work is expected to take approximately one to two weeks.

5. References

EPA. 1994. Resource Conversation and Recovery Act (RCRA) Corrective Action Plan (Final). OSWER Directive 9902.3-2A. May 1994.

EPA. 1996. Federal register, Vol. 61, No. 85, May 1, p. 19,432.

EPA. 2001. Administrative Order of Consent, U.S. EPA, Region 10 Docket No. RCRA-10-2001-0086. U.S. Environmental Protection Agency. April 30.

Baxter. 2007. Remedial Action Pilot Study Work Plan. Prepared by the J.H. Baxter Project Team for EPA Region 10. September 2007.

Baxter. 2011. Corrective Measures Study, Revision 2. Prepared by the J.H. Baxter Team for EPA Region 10. March 2011.

Baxter. 2015. Fourth Quarter 2014 Operations and Monitoring Report – Remedial Action Pilot Study. Prepared by the J.H. Baxter Project Team for EPA Region 10. March 2015.

LEGEND

- Cities
- Railroads
- Major Roads
- Watercourses

MAP NOTES:
Date: May 13, 2015
Data Sources: Air photo taken on July 15, 2013 by the USDA

FIGURE 1

Site Vicinity Map

Installation of Oxygen Infusers and
Rehabilitation of Recirculation Trench
Former J.H. Baxter Wood Treating Facility
Arlington, Washington

N

0 0.5 1
Miles

GSI Water Solutions, Inc.

Document Path: P:\Portland\302 - Baxter\GIS\Arlington_RCRA\Project_mxds\Work_Plan_Installation\Figure1_Site_Vicinity_Map.mxd

FIGURE 2

iSOC Installation Locations

Installation of Oxygen Infusers and Rehabilitation of Recirculation Trench

Former J.H. Baxter Wood Treating Facility
Arlington, Washington

LEGEND

- iSOC Deployment Well
- Shallow/Intermediate Monitoring Well
- Deep Monitoring Well
- Extraction Well
- Infiltration Trench

N

0 65 130 195
Feet

MAP NOTES:
Date: May 13, 2015
Data Sources: AMEC, ESRI, Air photo taken on July 9, 2010 by Microsoft

GSI Water Solutions, Inc.

Document Path: P:\Portland\302 - Baxter\GIS\Arlington_RCRA\Project_mxds\Work_Plan_Installation\Figure2_iSOC_Installation_Trenches_.mxd

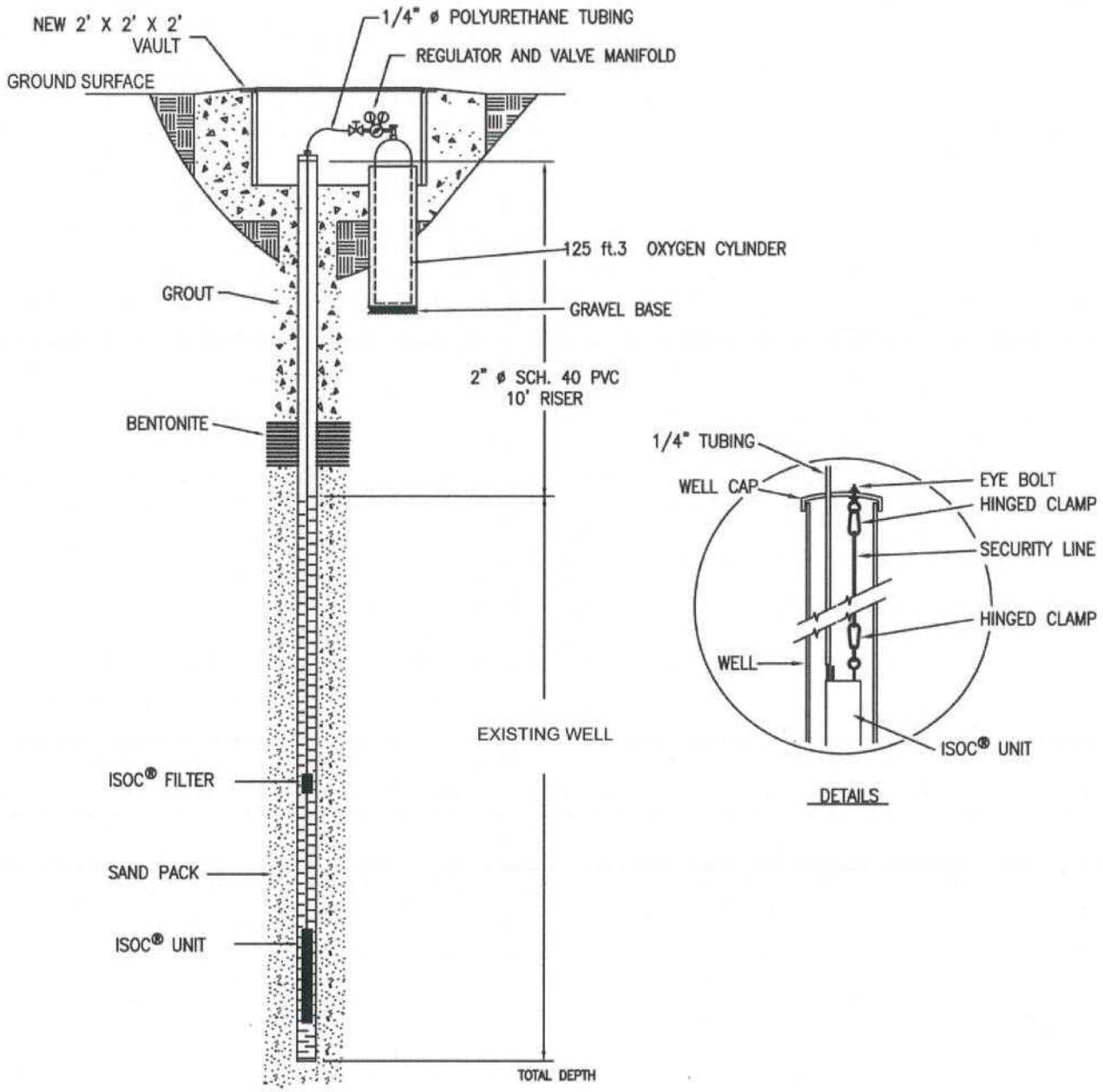

NOTE:
Not typical of existing wells.
Deployment depth set to field conditions.

FIGURE 3

iSOC Well Details

Installation of Oxygen Infusers and
Rehabilitation of Recirculation Trench
Former J.H. Baxter Wood Treating Facility
Arlington, Washington

GSI Water Solutions, Inc.

P:\Portland\302 - Baxter\Arlington RCRA\Figures\Work_Plan_Installation

FIGURE 4

Boring Installation

Installation of Oxygen Infusers and Rehabilitation of Recirculation Trench

Former J.H. Baxter Wood Treating Facility
Arlington, Washington

LEGEND

- Boring
- Standpipe
- Monitoring Well
- Recovery Well
- Extraction Well
- Infiltration Trench

N

0 8 16 24
Feet

MAP NOTES:
Date: May 13, 2015
Data Sources: AMEC, ESRI, Air photo taken on July 9, 2010 by Microsoft

GSI Water Solutions, Inc.

Document Path: P:\Portland\302 - Baxter\GIS\Arlington_RCRA\Project_mxds\Work_Plan_Installation\Figure4_Boring_Installation.mxd

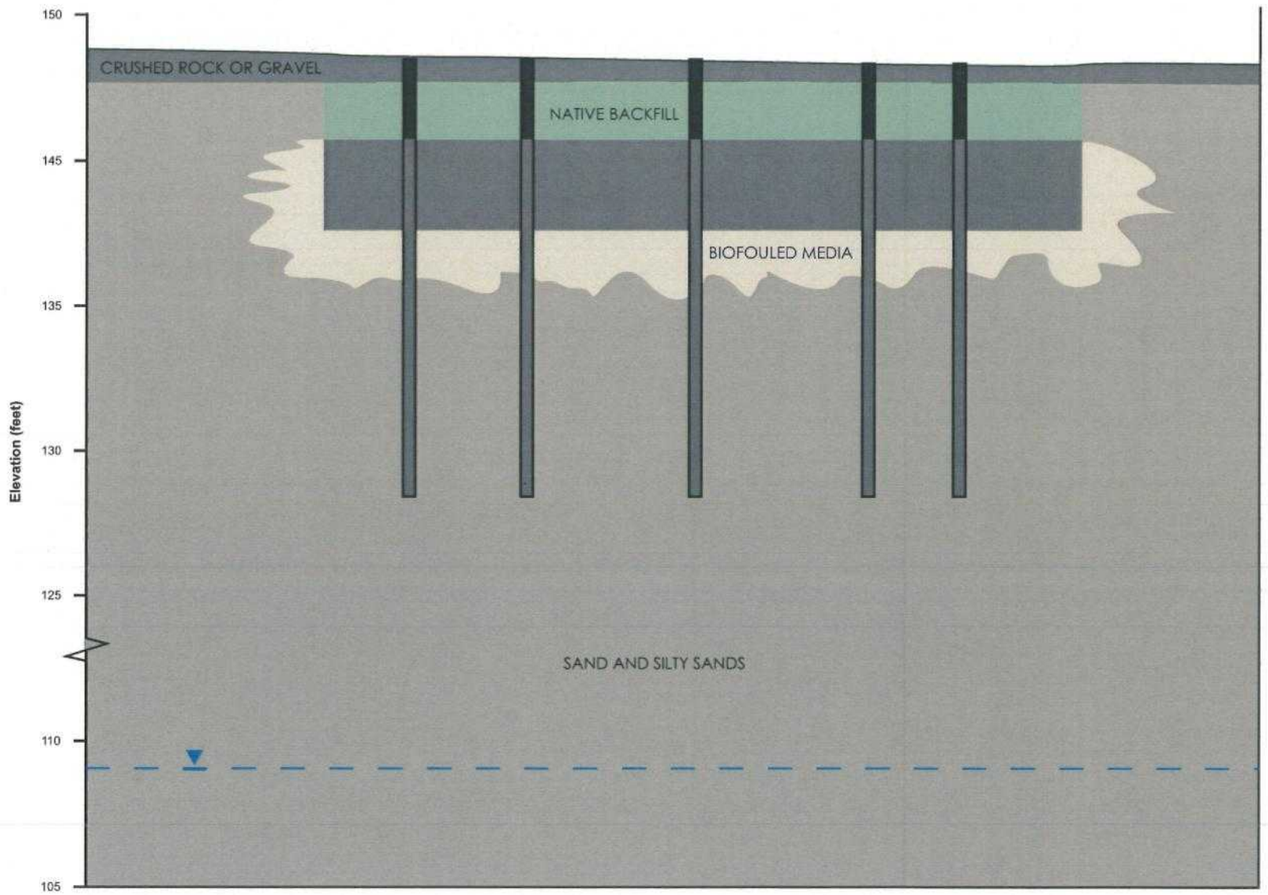

FIGURE 5

Cross Section

Installation of Oxygen Infusers and Rehabilitation of Recirculation Trench

Former J.H. Baxter Wood Treating Facility
Arlington, Washington

LEGEND

- Geotechnical Boring
- Approximate Static Water Level, 1st Quarter 2015
- Biofouled Media
- Crushed Rock or Gravel
- Concrete
- Native Backfill
- Sand and Silty Sands

GSI Water Solutions, Inc.

P:\Portland\302 - Baxter\Arlington RCRA\Figures\Work_Plan_Installation