[redacted]

EPA440/5-77-017

PCBs REMOVAL IN PUBLICLY-OWNED TREATMENT WORKS

Criteria and Standards Division
U.S. Environmental Protection Agency
Washington, D.C. 20460

July 19, 1977

DISCLAIMER

This report has been reviewed by the Office of Water and Hazardous Materials, U. S. Environmental Protection Agency, and approved for publication. Mention of trade names or commercial products does not constitute endorsement or recommendation for use.

EPA440/5-77-017

PCBs REMOVAL IN PUBLICLY-OWNED TREATMENT WORKS

Final Report

Contract No. 68-01-3273, Task 13

Criteria and Standards Division
U.S. Environmental Protection Agency
Washington, D.C. 20460

U.S. Environmental Protection Agency
Region 5, Library (PL-12J)
77 West Jackson Boulevard, 12th Floor
Chicago, IL 60604-3590

July 19, 1977

ABSTRACT

The removal of PCBs in each major unit process of publicly-owned sewage treatment works (POTWs) was quantified so that the removal efficiency results may be applied to other POTWs. Two POTWs, differing widely in size and in influent PCBs loading, were each sampled on a 24-hour basis for 7 to 10 days.

The overall PCBs removal efficiencies achieved were 83 to 89 percent, slightly lower than the suspended solids removal efficiencies achieved at the two plants. The steady-state PCBs removal efficiency of each unit process was strongly correlated to the corresponding suspended solids removal efficiency. In addition, large day-to-day variations in unit process PCBs removal efficiencies were correlated to variations about the mean influent PCBs and BOD concentrations.

Although reasonable PCBs material balances were achieved for one of the two plants, PCBs removed from the wastewaters of the other plant could not be accounted for in the sludges. PCBs loss by volatilization from the secondary treatment processes was discounted as an important mechanism, the result of explicitly analyzing the air emitted from the activated sludge aeration tanks. The quantities volatilized were very small fractions of the PCBs removed from the wastewaters.

TABLE OF CONTENTS

Page

1.0 SUMMARY 1

2.0 INTRODUCTION. 5

2.1 Background 5
2.2 Approach 5
2.3 Potential Sources of PCBs to the POTWs 6

2.3.1 The Bloomington POTW. 6
2.3.2 The Baltimore POTW. 7

2.4 Structure of this Report 8

3.0 DESCRIPTIONS AND OPERATING DATA FOR THE POTWS 10

3.1 The Bloomington POTW 10

3.1.1 Plant Influent 10
3.1.2 Primary Clarification 10
3.1.3 Trickling Filter. 14
3.1.4 Secondary Clarification 16
3.1.5 Polishing Lagoon. 17
3.1.6 Sludge Processing 18
3.1.7 Operating Data 19

3.2 The Baltimore POTW 21

3.2.1 Plant Influent. 21
3.2.2 Primary Clarification 21
3.2.3 Trickling Filter. 25
3.2.4 Secondary Clarification 25
3.2.5 Activated Sludge System 26
3.2.6 Secondary Clarification 27
3.2.7 Sludge Processing 28
3.2.8 Operating Data. 30

4.0 PROCEDURES FOR PCBs SAMPLING AND ANALYSIS 33

4.1 Collection, Transport and Compositing of Samples . 33
4.2 Analysis of Samples from the Bloomington POTW. . . 36
4.3 Analysis of Samples from the Baltimore POTW. . . . 38

TABLE OF CONTENTS (Con't)

Page

5.0 PCBs DATA AND ANALYSIS OF RESULTS 43

5.1 PCBs Concentration Data. 43

5.1.1 Analysis of Variance in Concentration Data. 43
5.1.2 Uncertainty in Derived PCBs Removal Efficiencies. 48

5.2 Overall PCBs Removal Efficiencies. 49
5.3 PCBs Removal in Primary Sedimentation 49

5.3.1 The Bloomington POTW Primary System 49
5.3.2 The Baltimore POTW Primary System 55

5.4 PCBs Removal in Secondary Treatment. 56

5.4.1 The Bloomington POTW Trickling Filter System. 56
5.4.2 The Baltimore POTW Secondary Systems . . . 56

5.5 PCBs Removal in the Bloomington Final Lagoon . . . 58
5.6 Correlation of Unit Process PCBs Removal Efficiencies 58

6.0 PCBs MATERIAL BALANCES 62

6.1 The Bloomington POTW 62
6.2 The Baltimore POTW 64

6.2.1 Measurement of PCBs in Sludges. 64
6.2.2 Primary System. 65
6.2.3 Secondary System 66

7.0 EXPERIMENTAL STUDY OF PCBs VOLATILIZATION 69

7.1 Laboratory Experiments 69
7.2 In-Situ Experiments at the Baltimore POTW 71
7.3 Conclusions. 76

List of Tables

		Page
1.	Hydraulic Loading, Bloomington POTW Primary Clarifiers	13
2.	Comparison Among Independently-Measured Flow Rates, Bloomington POTW	15
3.	Total Flow and Suspended Solids and BOD Analyses, Bloomington POTW	20
4.	Hydraulic Loading, Baltimore POTW Primary Clarifiers	24
5.	Activated Sludge Operating Data, Baltimore POTW	29
6.	Fluid Flow and Solids Balances, Baltimore POTW	31
7.	Flow and Suspended Solids and BOD Analyses, Baltimore POTW	32
8.	Summary of Sampling Stations	34
9.	Precision of PCBs Measurements - Baltimore POTW	42
10.	PCBs Concentrations, µg/l as Aroclor 1016 - Bloomington POTW	44
11.	PCBs Concentrations, µg/l as Aroclor 1242 - Baltimore POTW	45
12.	Overall Removal Efficiencies	50
13.	Removal Efficiencies, Bloomington POTW	51
14.	Laboratory Vaporization Runs	72
15.	Baltimore POTW Activated Sludge System, 2/77	76

LIST OF FIGURES

Page

1. Bloomington POTW Schematic 11

2. Baltimore POTW Schematic 22

3. Chromatograms of Standard and of Typical Bloomington Sample 37

4. Chromatogram of Typical Baltimore POTW Sample. 39

5. PCBs Removal Efficiency vs. Influent PCBs Concentration. 52

6. PCBs Removal Efficiency vs. Influent BOD Concentration . 54

7. PCBs Removal Efficiency vs. Influent PCBs Concentration. 57

8. PCBs vs. Suspended Solids Removal Efficiencies 60

9. In-Situ Sampler. 73

ACKNOWLEDGEMENTS

This report was prepared by the staff of Versar Inc., Springfield, Virginia, under the overall direction of Dr. Robert L. Durfee, Vice President. Mr. Donald H. Sargent, Mr. Roderick A. Carr, and Mr. Gregory A. Vogel were the principal authors. The analyses for PCBs were conducted at the Versar laboratories by Mr. Scott Powers, Mr. Vogel, and Dr. Mohammad N. Khattak. Mr. Michael C. Calhoun was the leader of the Versar field crew which conducted the 24-hour sampling at the Baltimore POTW. Mr. Philip Powers and Mr. Vogel designed and fabricated the air collector, and conducted this phase of the testing at the Baltimore POTW.

The considerable contributions of personnel of the Environmental Protection Agency is acknowledged. Mr. R. Kent Ballentine of the Criteria and Standards Division provided guidance as the Technical Project Officer. The sampling at the Bloomington POTW was conducted by an EPA Region V crew from the Evansville, Indiana field office, led by Mr. Richard Reising.

This project could not have been conducted without the full cooperation of the personnel at the two POTWs. The assistance of Mr. Steven Drake, Superintendent of the Winston Thomas plant at Bloomington; and of Mr. Paul S. Ander, Operations Engineer and Mr. Robert Mohr, Plant Manager, of the Back River plant at Baltimore; is especially acknowledged.

1.0 SUMMARY

The removal of PCBs in publicly-owned treatment works (POTWs) was quantified by sampling each of two POTWs on a 24-hour basis for 7 and 10 days respectively. The sampling was designed to yield PCB removal efficiencies for each major unit process (primary sedimentation, secondary trickling filter and clarification, secondary activated sludge and clarification, and tertiary polishing lagoon) so that the results may be applied to other POTWs with different combinations of major unit processes. Mass balances and engineering design and operating data for the unit processes at the two surveyed POTWs are included in this report, with comparisons to "typical" process data, to facilitate the application of these PCB removal results to other POTWs.

One of the two POTWs surveyed was the Winston Thomas STP at Bloomington, Indiana. The raw sewage to this 3.6-mgd plant includes the discharge (to the Bloomington municipal sewer system) of a major user of PCBs, which accounts for the high level of PCBs in the influent to this POTW. The other POTW surveyed was the Back River Wastewater Treatment Plant at Baltimore, Maryland. Although several minor industrial dischargers of PCBs are served by this 180-mgd POTW, the PCBs in the influent are more generally attributable to diverse industrial and domestic sources typical of a heavily-industrialized urban area.

Consistent with the sources of PCBs in the sewage to these two plants were the types of PCBs found in the samples of wastewaters and sludges. Aroclor 1016, the PCB used by the capacitor manufacturer at Bloomington, was identified as the PCB in the POTW samples. The PCBs in the Baltimore POTW samples were more difficult to identify and to analytically determine, since their chromatograms did not directly correspond to standards for commercial PCB mixtures. Identification of the PCBs in the Baltimore samples was aided by mass spectrographic analysis.

The sampling procedures at the POTWs were designed to avoid partitioning of the PCBs, since PCBs strongly adhere to surfaces on sample bottles or on suspended solids. Hence, individual samples were collected on an hourly basis (1,241 from Bloomington and 1,035 from Baltimore), and shipped to the laboratory, where they

were carefully composited (into 71 composites from Bloomington and 55 from Baltimore) and extracted with a hexane/methylene chloride mixture to ensure that all of the PCBs would be included in the extracts. The extracts were concentrated and subjected to gas chromatographic analysis for PCBs.

Replicate sampling and analysis at each POTW resulted in a standard deviation for each daily PCBs concentration measurement of 23 percent of the concentration, which includes the errors introduced by sampling, compositing, extracting, concentrating, and chromatographic analysis. The sampling and 24-hour compositing procedures followed did not appreciably add to the measurement uncertainties introduced by the laboratory procedures.

The average PCBs concentrations in the POTW influents were 145 μg/l at the Bloomington POTW, and 15 μg/l at the Baltimore POTW. The overall PCBs removal efficiencies achieved were 88 ± 2 percent for the Bloomington POTW, 89 ± 3 percent for the activated sludge side of the Baltimore POTW, and 83 ± 4 percent for the trickling filter side of the Baltimore POTW. These overall values are slightly lower than the suspended solids and BOD removal efficiencies achieved by the two plants.

The PCBs concentrations at each station in the Baltimore POTW exhibited no greater day-to-day variability than could be attributed to the measurement uncertainty. The influent PCBs concentration at the Bloomington POTW, however, varied much more widely, as it is sensitive to the day-to-day variations of the predominant industrial dischargers. This influent variability was reflected throughout the treatment system, although the system capacity provided some damping. For the Bloomington POTW primary system, the PCBs removal efficiency (η) was found to depend upon the influent PCBs concentration (C, μg/l) and upon the influent BOD concentration (B, mg/l):

$$\eta,\% = 53 + 33\left(\frac{C - 145}{145}\right) - 68\left(\frac{B - 249}{249}\right)$$

Similarly, the day-to-day PCBs removal efficiency for the Bloomington POTW secondary system was found to depend upon the influent PCBs concentration:

$$\eta,\% = 49 + 38\left(\frac{C - 56}{56}\right) \quad .$$

A summary of the steady-state removal efficiencies for the individual unit processes at the two POTWs is:

Bloomington Primary System	53 ± 9%
Bloomington Trickling Filter System	49 ± 6%
Bloomington Final Lagoon	31 ± 14%
Baltimore Primary System	46 ± 13%
Baltimore Activated Sludge System	82 ± 5%
Baltimore Trickling Filter System	71 ± 7%

Four of the above six individual unit process PCBs removal efficiencies were strongly correlated to the corresponding unit process suspended solids removal efficiencies:

$$\eta_{PCBs,\%} = 53.5 + 75 \left[\frac{\eta_{ss,\%} - 65}{65}\right] .$$

One of the other unit processes was the Bloomington POTW final lagoon, which exhibited a low apparent PCBs removal efficiency most probably because "old" PCBs in the lagoon sediment were being resuspended and discharged (the PCBs waste load to this POTW was higher in previous years).

The other unit process not agreeing with the above correlation was the Baltimore POTW primary system, which only achieved a 29 percent suspended solids removal efficiency. The much higher PCBs removal efficiency is postulated to result from an alternate mechanism; e.g., scum removal.

Although reasonable PCBs mass balances were achieved for the Bloomington POTW, the PCBs removal from the Baltimore POTW wastewater could not be accounted for by the PCBs found in the sludges. The discrepancy in the Baltimore POTW primary system could be explained by the alternate scum removal mechanism. Two potential mechanisms were postulated for the disappearance of PCBs from the Baltimore POTW secondary treatment process: biodegradation and volatilization.

Since volatilization, if significant, would result in the direct re-release of PCBs to the environment, a two-part experimental program was conducted to explicitly determine the quantity vaporized. Laboratory experiments simulating the Baltimore POTW aeration basins were conducted, followed by in-situ measurements at the Baltimore POTW using a gas collection apparatus which isolated a portion of the aeration basin. PCBs were indeed recovered from the air samples, but the quantities were no greater than an equivalent 0.033 pounds per day from the entire Baltimore POTW aeration basins. These quantities volatilized were very small fractions of the PCBs quantities in circulation in the mixed liquor or of the quantities removed from the wastewaters, and volatilization was discounted as an important mechanism for the removal of PCBs from wastewaters in POTWs.

Biodegradation of Aroclor 1242, as indicated by disappearance in the laboratory experiments, was of sufficient magnitude to explain the disappearance of PCBs from the secondary treatment processes at the Baltimore POTW. No direct measurements of biodegradation rate were made, however, so that the disappearance mechanism still remains unresolved.

2.0 INTRODUCTION

2.1 Background

The U.S. Environmental Protection Agency (EPA) is currently involved in the promulgation process for establishing effluent standards for toxic pollutants. EPA has set forth final effluent standards for direct dischargers of polychlorinated biphenyls (PCBs), under Section 307 (a) of the Federal Water Pollution Control Act Amendments of 1972 (FWPCA, PL92-500) in the Federal Register (42 F.R. 6532, Feb. 2, 1977). In the course of technical and economic studies to support the proposed direct discharge standards for PCBs, it became evident that substantial quantities were being discharged to publicly owned treatment works (POTWs). EPA has authority under Section 307 (b) of the FWPCA to regulate the discharge of pollutants to POTWs if the pollutants are toxic and disrupt the operation of the POTW, or else pass through the POTW without sufficient treatment. The study described in this report was therefore conducted to determine the efficacy of PCBs removal by POTWs.

2.2 Approach

The approach in this study was to collect hourly samples, on a 24-hour basis, for 7 and 10 consecutive days, respectively, at each of two secondary POTWs, and to analyze for PCBs the daily composite of the 24 hourly samples. The primary objective was to measure the PCBs removal efficiency of each wastewater unit operation at these plants, such that the results might be projected to many other POTWs which may have different design combinations of the wastewater unit operations. The choice of the two POTWs for this study was based upon three major factors:

1. That the two treatment plants would have, between them, a good representation of the major wastewater unit operations - primary sedimentation, activated sludge secondary treatment, trickling filter secondary treatment, and secondary clarification.
2. That there would be a sufficient concentration of PCBs, at least in the POTW influent for each of the two plants, to avoid undue

analytical difficulties and/or imprecision of the results. A nominal target for the influent PCBs concentration was a minimum of about 10 ppb, so that the expected lower concentrations after POTW treatment could be differentiated from the influent concentration with some precision.

3. The geographic location of the POTWs with respect to the Versar analytical laboratories, or in proximity of transportation facilities; to avoid delays between sampling and laboratory extraction and analysis. In addition, the plants must be large enough to require constant operator attention and to provide reliable laboratory analyses of classical parameters (BOD, suspended solids, etc.).

Two POTWs were chosen for study in response to the above factors:

1. The Winston Thomas Sewage Treatment Plant, Bloomington, Indiana, was sampled for ten days from September 20th through September 29, 1976. This 3.6 mgd plant services (among other sources) the campus of Indiana University at Bloomington, and most important, the Westinghouse Electric Corporation capacitor manufacturing plant at Bloomington, a significant user of PCBs.

2. The Back River Wastewater Treatment Plant, Baltimore, Maryland was sampled for seven days from October 11th through October 18, 1976. This 180 mgd plant services mostly domestic waste sources in the City and County of Baltimore, but also (amounting to a significant wastewater quantity) the manufacturing waste sources of this industrialized city which by preliminary sampling was shown to contain significant quantities of PCBs.

2.3 Potential Sources of PCBs to the POTWs

2.3.1 The Bloomington POTW

The major potential source of PCBs to the Bloomington POTW is the discharge to the municipal sewage system of the Westinghouse Electric Corporation capacitor manufacturing plant in Bloomington. This plant exclusively uses Aroclor 1016 as the capacitor dielectric fluid. Test results of the plant discharge, reported by Westinghouse, are:

Date (1975)	Discharge Flow, gallons per day	Aroclor 1016 Concentration, ppb	Aroclor 1016 Quantity, lbs/day
1/9	189,481	3,900*	6.16
2/3	162,069	526	0.71
3/1	134,924	964	1.08
4/30	118,637	268	0.27
5/30	106,177	1,930	1.71

*Average of two determinations: 4,600 and 3,170 ppb.

2.3.2 The Baltimore POTW

Three potential minor industrial sources of PCBs to the Baltimore POTW have been identified. One is the Western Electric facility at 2500 Broening Highway, Baltimore, which in the past manufactured submarine cables using Polycin 146, a two-component potting compound which contains up to 20 percent by weight of Aroclor 1254. The total PCB use did not exceed 140 pounds for the inclusive 1972-1975 period. Cables manufactured after 1975 utilized a non-PCB potting compound.

A second potential industrial source is the General Electric transformer repair shop at 920 E. Fort Avenue, Baltimore, which has reportedly ceased the use of PCBs as of July 1, 1976. This facility historically handled about three PCB-containing transformer repair jobs each year (only about 5 percent of all transformers contain PCB dielectric fluid). A typical transformer would contain 200 to 300 gallons of fluid. The PCBs were purchased as needed in 55-gallon drums, and were not stored in large quantities. During an EPA survey on March 4, 1976, prior to the cessation of PCB usage at this facility, a PCB concentration of 205 ppb was measured in an oil separator which discharges to the municipal sewage system.

The third potential industrial source is the Westinghouse Electric transformer repair shop in Baltimore. There is continuing repair of 6 to 8 PCB-containing transformers per year, each of which require about 500 gallons of fluid. The PCB fluid is ordered as needed in 55-gallon drums. During an EPA survey on March 5, 1976, a PCB concentration of 690 ppb was measured in a final sump, from the washing and steam-cleaning areas, which discharges to the municipal sewage system.

In industrialized areas such as Baltimore, it would be expected that other sources of PCBs would be from the past general usage of PCB-based hydraulic fluids and heat-transfer fluids in manufacturing operations. Another potential source to both Bloomington and Baltimore is toilet tissue and other paper products; present-day tissue products which contain recycled paper, are reported to contain 1 to 3 ppm of PCBs. Other general paths of PCBs into municipal sewage include fallout from the atmosphere and storm water runoff from urban areas.

2.4 Structure of This Report

The first sections of the body of this report contain descriptions and engineering characteristics of the unit processes in the two POTWs, with details of the specific sample collection locations, and with the operating histories during the survey periods. The next section describes the sampling procedures employed, the handling and transport of the samples, the compositing

of the samples at the Versar laboratory, and the analytical procedures employed at this laboratory for determining PCBs. Next, the data is presented for the PCBs analyses, and the results are analyzed with respect to the PCBs removal accomplished by each unit process, as influenced by the POTW operating conditions and other factors. PCBs material balances are presented for each POTW. The final section of this report is a presentation and discussion of data for the explicit determination of PCBs volatilized from the Baltimore POTW.

3.0 DESCRIPTIONS AND OPERATING DATA FOR THE POTWS

3.1 The Bloomington POTW

The Winston Thomas Sewage Treatment Plant in Bloomington, Indiana, is a 3.6 mgd plant which features primary sedimentation, trickling-filter secondary treatment, and a polishing lagoon. Figure 1 is a schematic drawing of this POTW.

3.1.1 Plant Influent

The plant influent consists of the flow from three trunk sewers, plus two plant return flows which are added to one of these sewers. The two return flows, shown on Figure 1, are the sludge from the secondary clarifiers (A), and the supernatant from sludge digester No. 3 (B), which is the last of four digesters in series. There is no access to measure or sample the influent flow before the influx of the two return flows. Moreover, it was judged that mixing among the three influent trunk sewers was not effective upstream of the two aerated grit chambers (which have scum removal capability). Hence, the influent flow rate and sampling station (identified as Point 1 on Figure 1) was selected downstream of the degritters. Samples from this station were collected from a manhole just downstream of the plant's magnetic flow meter. However, since the calibration of the plant's flow meter was questionable, the influent flow rate was independently measured with a rectangular suppressed weir in conjunction with a Manning flow meter. It is this independent flow measurement that is the primary measurement for this study, rather than the plant's meter.

3.1.2 Primary Clarification

As Figure 1 shows the flow from the degritters is split to two banks of rectangular primary clarifiers, each with three independent tanks. Each of the six basins is approximately 15 feet wide by 95 feet long, with a water depth of about 10 feet. The volume of each basin is 105,000 gallons, and the total primary clarifier volume is 630,000 gallons. The surface area

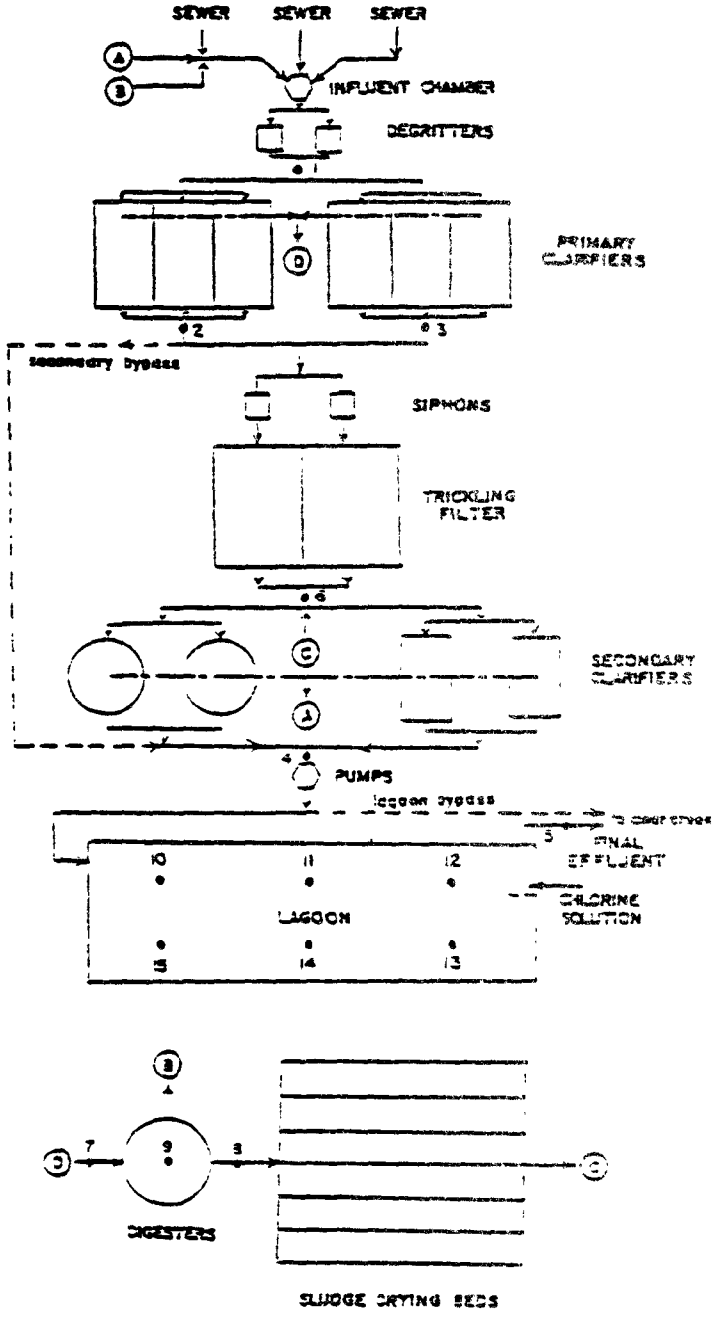

Figure 1- Bloomington POTW Schematic

per basin is about 1,420 square feet, and the total area for all six primary basins is 8,500 square feet. At a nominal total flow of 3.6 mgd, the average detention time is 4.2 hours and the average overflow rate is 420 gpd/sq. ft.

During all of the survey period at the Bloomington POTW, however, the north bank of primary clarifiers had only two of the three basins in operation. The northern-most basin (the furthest from the south bank of clarifiers) was dry, with maintenance being performed on the sludge collectors. However, it was apparent that the flow through the north bank was greater than through the south bank, probably due to asymmetry of the flow channels - the south bank of clarifiers was the original set, with the north bank added in a later plant expansion. Both banks, however, have the same basin dimensions. The actual hydraulic loading during the survey period is shown in Table 1. The detention time varied from 1.9 to 5.0 hours, and the overflow rate varied from 310 to 915 gallons per day per square foot. In comparison, a typical design parameter for achieving good primary clarification of municipal wastewaters is 800 to 1,200 gpd/sq. ft. average overflow rate (where "good clarification" is 50 to 60 per cent suspended solids removal and 30 to 35 per cent BOD removal).[1] According to an alternate reference, primary sedimentation before trickling filters typically has a detention time of 2.0 to 2.5 hours or has an overflow rate of 600 to 900 gpd/sq. ft.[2] It appears that despite the hydraulic unbalance between the two banks of clarifiers during the survey period, adequate capacity existed in each bank to achieve good primary clarification.

The effluent from each bank of primary clarifiers was measured and sampled in the channel which runs across the three basins. A rectangular weir in conjunction with a Stevens Headstage Recorder and stilling well was used to measure flow from each bank. These sampling and flow measuring stations are identified in Figure 1 as Point 2 (north bank of primary clarifiers) and as Point 3 (south bank).

Three independent measurements of plant flowrate were made at the Bloomington POTW: the influent to the primary treatment system (including return flows), the sum of the north and south primary effluents, and the

Table 1 - Hydraulic Loading, Bloomington POTW Primary Clarifiers

Day	1	2	3	4	5	6	7	8	9	10	Average
Avg. Daily Flow, mgd:											
North	2.13	2.11	1.39	1.78	2.13	1.91	2.29	2.29	2.29	2.60*	2.09
South	1.68	1.52	1.60	1.52	1.52	1.34	1.75	2.00	2.06*	1.75	1.67
Avg. Detention, hrs:											
North	2.37	2.39	3.62	2.83	2.37	2.64	2.20	2.20	2.20	1.94	2.41
South	4.50	4.98	4.73	4.98	4.98	5.65	4.32	3.78	3.67	4.32	4.53
Avg. O/F Rate, gpd/ft:											
North	750	743	490	627	750	672	806	806	806	915	736
South	394	356	375	356	356	314	410	469	483	410	392

*Calculated by Difference, from Total Flow Measurement

effluent from the final lagoon. Since no direct measurements were made of return flows, sludge flows, or bypassed flows at the Bloomington POTW, no corrections to the plant flow rates could be made for individual unit processes. Table 2 shows the comparison among the independently-measured flow rates - although significant daily differences occur, the averages for the first eight days of the survey period are very close to each other.

A gate at the end of each of the two primary effluent channels, upstream from the sampling and measuring stations 2 and 3, is used by the plant personnel to bypass excess flow around the secondary treatment system. Although no quantitative measure of bypassed flow was made, the gates were opened during eight days of the ten-day survey period:

Day	Hours of Secondary Bypass
1	6
2	4
3	10
4	6
5	0
6	0
7	10
8	19
9	7
10	20

3.1.3 Trickling Filter

The combined flow from the primary clarifiers (except for that bypassed) is fed to a trickling filter bed via two siphon dosing tanks and fixed nozzles. Each dosing tank feeds a distinct half of the bed, but there is no physical boundary in the bed nor is there a separation of drainage from the two halves of the bed. The total trickling filter bed, with stone media, has a surface area of about 1.5 acres, a depth of about 9 feet, and a volume of 588,000 cubic feet. The filter is a one-pass low-rate unit with no recycle.

Table 2 - Comparison Among Independently-Measured Flow Rates, Bloomington POTW

Day	North Primary Effluent Plus South Primary Effluent, mgd	Plant Influent, mgd	Final Effluent, mgd
1	3.81	2.95	3.11
2	3.63	3.45	3.16
3	2.99	3.72	3.59
4	3.30	3.05	3.88
5	3.65	3.19	3.62
6	3.25	3.04	3.20
7	4.04	4.06	3.74
8	4.29	3.94	4.06
9	—	4.35	4.03
10	—	4.35	4.20
Average, Days 1-8	3.62	3.43	3.55

The hydraulic loading of the bed at the nominal flow of 3.6 mgd is 2.4 mgd/acre, within the "typical" range of 1 to 4 mgd/acre.[1,2] During the Bloomington survey period, the average BOD concentration of the trickling filter influent (the primary effluent) was about 150 mg/l. At a nominal flow rate of 3.6 mgd, the organic load to the trickling filter was 4,500 pounds per day of BOD, or 7.7 pounds of BOD per day per thousand cubic feet. This is at the lower end of the range of the organic loading for "typical" low-rate trickling filters, 5 to 25 lbs. BOD/day/1,000 cu. ft.[1,2]

Periodically, the Bloomington trickling filter is flooded to kill filter fly larvae; and also periodically an insecticide is sprayed on the boundary walls of the filter.

A sampling station (Point 6 on Figure 1) was established in a well just downstream of the trickling filter, upstream of where the flow divides to the several secondary clarifiers. However, hourly samples were not collected at Point 6 (as they were at Points 1, 2, 3, 4, and 5). Instead, a sample was taken from Point 6 once every 8-hour shift during the sampling period. Downstream of this sampling station, but upstream of the clarifiers, the underdrain from the sludge drying beds (C on Figure 1) is returned to the main plant stream.

3.1.4 Secondary Clarification

There are four secondary clarifiers at the Bloomington POTW: the two original rectangular basins and the two circular clarifiers which were added later. The approximate dimensions of each rectangular clarifier basin are 20 feet wide by 65 feet long by 10 feet deep; each circular clarifier is approximately 54 feet in diameter with depths from 10 feet at the sidewall to 14 feet at the center. The total volume of all four secondary clarifiers is 660,000 gallons, and their total surface area is 6,600 square feet. The volume of the circular clarifiers is 2.5 times the volume of the rectangular clarifiers; and the surface area of the circular clarifiers is 75 per cent more than the surface area of the rectangular clarifiers. Since no flow

measurement for individual basins could reasonably be made, the entire group of four secondary clarifiers was treated as an aggregate in this study. The sludge from the secondary clarifiers (A in Figure 1) is returned to the head of the plant.

At the nominal flow rate of 3.6 mgd, the detention time is 4.4 hours and the overflow rate is 550 gallons per day per square foot. In comparison, "typical" final clarification following trickling filters is characterized in the literature by average overflow rates of 400 to 600 gpd/sq. ft.[1], or alternately of 800 to 1,000 gpd/sq. ft.[2]

After the overflows from the four secondary clarifier basins are rejoined, a sampling station (Point 4 in Figure 1) was established in a wet well. Downstream of this sampling station, the water is pumped to the polishing lagoon. There are two pumps, one running continuously and the other running intermittently according to the level in the wet well. Each pump is equipped with a running-time meter; readings were recorded during this survey. Although there are provisions for bypassing a portion of the secondary clarifier effluent directly to Clear Creek (the receiving stream) instead of to the lagoon, no water was bypassed during the survey period.

3.1.5 Polishing Lagoon

The polishing lagoon is rectangular in shape and has a surface area of 16.5 acres. The depth of water, to the sludge-sediment layer, was roughly measured in this survey at about 5 feet. The influent spills into the lagoon at its northeast corner and the final effluent to Clear Creek is at the southeast corner. In this southeast corner, a dam isolates a small section of the lagoon, with weirs for the influent to this section and for the final effluent. A chlorine solution is added to the water in this section. The final effluent flow rate was measured with a suppressed rectangular weir in conjunction with a Manning flow meter, and a sampling station (Point 5 in Figure 1) was established for the final effluent.

The effective volume of the Bloomington polishing lagoon is approximately 27 million gallons. At a nominal flow rate of 3.6 mgd, the

detention time is 7.5 days. Typically, detention times of 7 to 30 days are found for facultative lagoons.[2] At an average BOD concentration of 50 mg/l for the influent to the Bloomington lagoon, the organic loading (at the nominal 3.6 mgd) is about 1,500 pounds per day, or about 90 pounds of BOD per day per acre. The organic loading for "typical" facultative lagoons is, in comparison, 20 to 50 pounds of BOD per day per acre.[2]

Six grab samples of sludge from the bottom of the lagoon were taken on September 20, 1976, using a Petersen dredge. The sampling stations (see Figure 1) were as follows:

Point 10 - North East Quarter (nearest to inlet)
Point 11 - East Central
Point 12 - South East Quarter (nearest to outfall)
Point 13 - South West Quarter
Point 14 - West Central
Point 15 - North West Quarter

3.1.6 Sludge Processing

The collected sludge from the primary clarifiers (D in Figure 1) was sampled (one grab sample on September 20, 1976) from one of the three piston pumps, Point 7 in Figure 1. This primary sludge is pumped to Digester No. 1, and then Digesters No. 2, 4, and 3 (in that order) are used in series. Digesters No. 1 and 2 are each about 50 feet in diameter and 33 feet high, with volumes for each of about 500,000 gallons. They have gas mixers and sludge heating via an external pump-around circuit. Digesters No. 4 and No. 3 are each about 40 feet in diameter; No. 4 is about 25 feet high with a volume of 240,000 gallons, and No. 3 is about 32 feet high with a volume of 300,000 gallons.

The supernatant from Digester No. 3, the last in series, is returned to the head end of the plant (B in Figure 1). The digested sludge from the four anaerobic digesters is periodically sent to the bank of 18 drying beds, each with a capacity of 30,000 gallons. The underdrain from the drying beds (C of Figure 1) is returned to the influent to the secondary

clarifiers. Dried sludge from the beds is presently being stockpiled at the Bloomington plant, since landfilling or soil conditioning use has been discontinued because of the high PCBs content of this sludge.

No direct measurements were made of the flow rate of primary sludge or of its concentrations of total suspended solids and volatile solids. However, the total suspended solids in the sludge may be estimated from the difference between the TSS in the plant influent (average of 300 mg/l) and the TSS in the primary effluent (average of 100 mg/l). At a nominal wastewater flow rate of 3.6 mgd, the primary sludge solids would amount to 6,000 pounds per day. At a typical volatile solids content of 0.7 for primary sludge,[3] the volatile suspended solids loading to the digesters would be 4,200 pounds per day. Moreover, a typical primary sludge solids concentration of 3 per cent[3] implies a primary sludge volume for Bloomington of 24,000 gallons per day. Using these estimated digester loadings in conjunction with the total digester volume at Bloomington of 1,540,000 gallons (or 206,000 cubic feet) results in an hydraulic retention time of 64 days and in a volatile suspended solids loading of 0.020 pounds per day per cubic foot. In comparison, "typical" primary sludge low-rate digesters have hydraulic retention times of 30 to 60 days and volatile suspended solids loadings of 0.04 to 0.1 pounds per day per cubic foot.[2,3] Typical high-rate digesters have 10 to 20 days retention times and VSS loadings of 0.15 to 0.40 pounds per day per cubic foot.[2,3]

Using "typical" values for anaerobic digesters of 40 per cent digestion of volatile solids and of 17 cubic feet of digester gas generated per pound of digested volatile solids,[3] the gas production at Bloomington is estimated as 29,000 cubic feet per day.

3.1.7 Operating Data

The hydraulic data for the Bloomington POTW, measured by the EPA field crew during the survey period, were presented in Tables 1 and 2. Table 3 lists the suspended solids and BOD_5 data, supplied by POTW personnel, during this period.

Table 3 - Total Flow and Suspended Solids and BOD Analyses, Bloomington POTW

	Day of Survey Period										Flow-Weighted Average
	1	2	3	4	5	6	7	8	9	10	
Total Flow, mgd	3.81	3.63	2.99	3.30	3.65	3.25	4.04	4.29	4.35	4.35	3.77
SS, mg/l:											
Primary Influent	255	292	328	204	256	507	212	396	184	244	283
Primary Effluent	103	128	100	120	24	50	80	116	155	120	102
Trickling Filter Eff.	65	104	70	56	--	--	53	98	108	72	81
Sec. Clarifier Eff.	23	36	11	42	--	--	25	84	58	24	40
Final Lagoon Eff.	5	4	4	12	3	5	25	42	20	20	15
BOD_5, mg/l:											
Primary Influent	240	240	313	250	220	305	220	330	173	203	246
Primary Effluent	108	170	155	152	144	148	114	182	97	150	141
Trickling Filter Eff.	55	46	86	97	--	--	54	95	73	63	72
Sec. Clarifier Eff.	44	35	54	45	--	--	47	69	39	33	46
Final Lagoon Eff.	21	21	22	20	24	14	23	32	16	16	21

3.2 The Baltimore POTW

The Back River Wastewater Treatment Plant in Baltimore, Maryland, is a 180 mgd POTW which has parallel trickling filter and activated sludge secondary treatment units after a common primary treatment unit. Figure 2 is a schematic drawing of this POTW.

3.2.1 Plant Influent

During the sampling period of October 11-18, 1976, the influent raw sewage to the plant had an average daily flow of 179 million gallons. A sample of this raw sewage, upstream of any return flow additions, is regularly taken by plant personnel from the influent chamber. Sampling station No. 1 was established at this same position.

Three return flows are added to the raw sewage upstream of the primary clarifiers. The overflow from the sludge elutriation tanks (labeled "A" in Figure 2), which averaged 1.9 mgd, is added at the influent chamber. Return flow (B) is the sludge from the secondary clarifiers on the trickling-filter side of the plant (these clarifiers are called humus tanks). This flow averaged 0.9 mgd, and joins the main plant influent downstream of two parallel bar screens. The third return flow (C), the overflow from the sludge thickener, which is added downstream of the degritters, averaged 14.6 mgd. The total flow into the primary clarifiers averaged 196 mgd (approximately 200 mgd). Sampling station No. 2 was established at this point (shown in Figure 2), which coincides with a sampling station regularly used by plant personnel, and with plant flowmeters which measure the flow rates into each of seven parallel primary clarifiers.

3.2.2 Primary Clarification

The seven circular primary clarifiers are each 12 feet deep at the sidewall and 21 feet deep at the center. Clarifiers No. 1 and No. 2 are each 200 feet in diameter, and each has a volume of 3,520,000 gallons and a surface area of 31,400 square feet. Clarifiers No. 3, 4, 5, 6, and 7 are each 170 feet in diameter, with a volume of 2,550,000 gallons and a surface area of

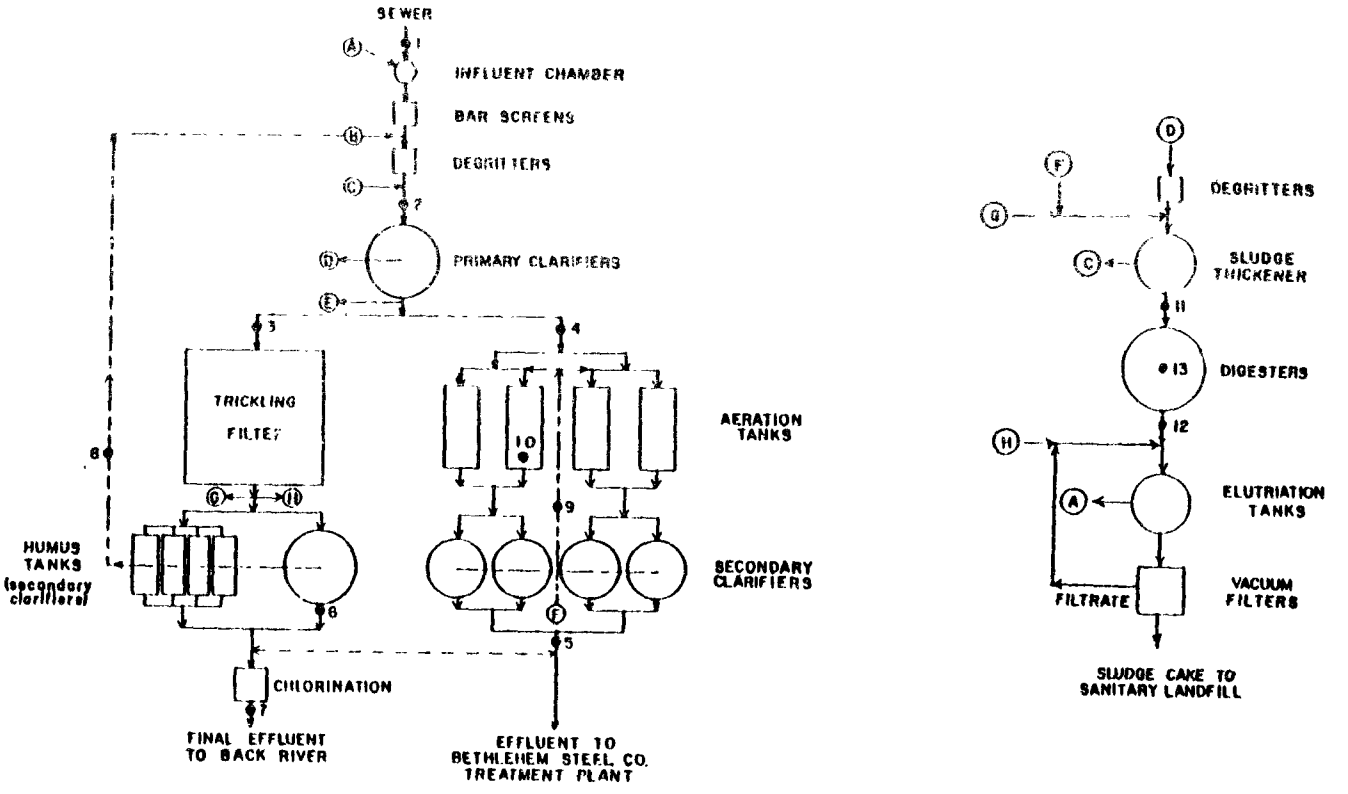

Figure 2- Baltimore POTW Schematic

22,700 square feet. The totals for all seven clarifiers are 19,790,000 gallons volume and 176,300 square feet surface area. At an average total flow of 200 mgd, the average detention time is 2.37 hours, and the average overflow rate is 1,130 gpd/sq. ft. The total flow is usually divided among the seven clarifiers so that both the detention time and the overflow rate are the same for all: the average flow to each of Clarifiers No. 1 and No. 2 is nominally 35.6 mgd, and the average flow to each of Clarifiers No. 3, 4, 5, 6, and 7 is nominally 25.7 mgd.

However, Clarifier No. 7 was out of service during the sampling period of October 11-18, 1976. The hydraulic loadings for the remaining six clarifiers during this period are listed in Table 4.

During the high flow period in the diurnal cycle, the flow peaked at about 117 per cent of the average daily flow, with corresponding effects upon the clarifier loadings.

In comparison, a typical design parameter for achieving good primary clarification of municipal wastewaters is 800 to 1,200 gpd/sq. ft. average overflow rate.[1] According to an alternate reference,[2] the following primary sedimentation data are applicable:

	Detention Time, Hours	Overflow Rate, gpd/sq. ft.
Before Activated Sludge Secondary	0.75 - 1.0	1,000 - 1,500
Before Trickling Filter Secondary	2.0 - 2.5	600 - 900

It appears, then, that with the one clarifier out of service during the sampling period, the remaining clarifier capacity may have been marginal for achieving good primary sedimentation.

A total of about 2.1 mgd of primary sludge is removed from the primary clarifiers (labeled "D" in Figure 2). Of the 198 mgd of overflow from the clarifiers, about 1.7 mgd are removed and used as plant flushing water (E). The remaining primary effluent flows by gravity down a long channel alongside the trickling filter bed, and several cross-connections feed approximately

Table 4 - Hydraulic loading, Baltimore POTW Primary Clarifiers

Day	1	2	3	4	5	6	7	8	Average
Avg. Daily Flow, mgd:									
#1, #2	39.0	38.8	37.9	37.7	37.6	37.2	35.8	36.8	37.6
#3 - #6	32.3	32.2	31.2	31.5	31.2	29.6	28.6	30.1	30.8
Avg. Detention, Hrs:									
#1, #2	2.17	2.18	2.23	2.24	2.25	2.27	2.36	2.30	2.25
#3 - #6	1.90	1.90	1.96	1.94	1.96	2.07	2.14	2.04	1.99
Avg. O/F Rate, gpd/ft^2:									
#1, #2	1,240	1,240	1,210	1,200	1,200	1,180	1,140	1,170	1,200
#3 - #6	1,420	1,420	1,370	1,390	1,370	1,300	1,260	1,330	1,360

150 mgd to the bed. Sampling station No. 3 (shown in Figure 2) was established in the long channel, approximately midway along the bed. The approximately 46 mgd of primary effluent, remaining in the channel after the trickling filter influent is withdrawn, continues flowing in the channel to the activated sludge process units. By summer of 1977, the flow of primary effluent to the activated sludge process will be increased to 60 mgd.

3.2.3 Trickling Filter

The trickling filter is a one-pass low-rate unit with no recycle. The total bed area is 30 acres, and is filled to a depth of 8.5 feet with trap rock of 1 to 2 1/2 inch size. The total bed volume is 11,110,000 cubic feet. Most of the bed is fed by 50 rotary distributors, each 157 feet in diameter. One of these distributors has a flow range of 4.02 to 8.04 mgd, while the other 49 each has a range of 1.34 to 2.68 mgd. The remainder of the trickling filter bed is fed by 5,830 fixed nozzles.

The hydraulic loading of the entire bed, at the average flow (during the sampling period) to the bed of 150 mgd, was 5 mgd/acre, compared to the "typical" range of 1 to 4 mgd/acre.[1,2] During the sampling period, the average BOD concentration of the trickling filter influent (the primary effluent) was 154 mg/l. At an average flow rate to the trickling filter of 150 mgd, the organic load to the filter was 193,000 pounds per day of BOD, or 17.3 pounds of BOD per day per thousand cubic feet. This value is within the range of the organic loading for "typical" low-rate trickling filters, 5 to 25 lbs. BOD/day/1,000 cu. ft.[1,2]

3.2.4 Secondary Clarification (After Trickling Filter)

Two streams are withdrawn from the main effluent from the trickling filter, upstream of the humus tanks. About 13.4 mgd is withdrawn as dilution water (labeled "G" in Figure 2) for the primary sludge; and about 1.4 mgd (labeled "H") is withdrawn as elutriation water. The remaining 135 mgd of trickling filter effluent flows to five parallel secondary clarifiers, called "humus tanks" at the Baltimore POTW. Four of these tanks (Nos. 1A, 1B, 2A, and 2B) are rectangular, each with dimensions of 143 feet by 276 feet by 10

feet deep. Each has a surface area of 39,500 square feet and a volume of 2,950,000 gallons. The fifth humus tank (No. 3) is circular, with a diameter of 170 feet, a depth ranging from 11 to 17.5 feet, a surface area of 22,700 square feet, and a volume of 2,230,000 gallons. The totals for all five secondary clarifiers are 180,700 square feet surface area and 14,030,000 gallons volume. At an average total flow of 135 mgd, the average overflow rate is 750 gpd/sq. ft., and the average detention time is 2.49 hours. The total flow is actually divided among the five clarifiers so that the overflow rate is the same for all (750 gpd/sq. ft.). The average flow to each of the rectangular clarifiers is 29.6 mgd, and the average flow to the circular clarifier is 17.0 mgd. The detention times, therefore, are 2.39 hours in the rectangular clarifiers and 3.15 hours in the circular clarifier.

In comparison, "typical" final clarification following trickling filters is characterized in the literature by average overflow rates of 400 to 600 gpd/sq. ft.,[1] or alternately of 800 to 1,000 gpd/sq. ft.[2]

The sludge from the humus tanks (labeled "B") is returned to the head of the plant. This flow averaged 0.9 mgd during the survey period. A grab sample of this sludge was taken (at Point 8 in Figure 2) for PCB analysis.

A sampling station (Point 6 in Figure 2) was established just downstream of the circular humus tank. The plant personnel regularly take samples at this same point.

The combined overflow from all five humus tanks is submitted to chlorination before discharge to Back River. As Figure 2 shows, there is a cross-connection which allows this treated water to be alternately discharged to the Bethlehem Steel Company treatment facility at the Back River Plant; after settling and chlorination; this treated water is then used by Bethlehem Steel at Sparrows Point.

3.2.5 Activated Sludge System

The primary treatment effluent which is not fed to the trickling filter is subjected to activated sludge secondary treatment. Sampling

point 4 was established at the end of the long channel from the primary clarifiers, just upstream of the activated sludge units.

The activated sludge process at the Baltimore POTW consists of two parallel units, each with two aeration tanks and two secondary clarifiers. As Figure 2 shows, there is a common return sludge line for the two units. Each of the four aeration tanks is actually a set of two rectangular basins: the influent (primary effluent) and the return sludge are both fed at the head of one basin, the mixed liquor flows to the end of that basin, and is then turned 180 degrees into the second parallel basin. These units are conventional activated sludge, with the flow closely approximating plug flow. Each basin is 386 feet long and 30 feet wide, with a mixed-liquor depth of 15.3 feet. Each of the four aeration tanks (consisting of two basins) has a volume of 346,000 cubic feet, or 2,590,000 gallons.

Aeration tanks No. 3 and No. 4, and the corresponding final clarifiers No. 3 and No. 4, are very recent additions to the plant. During the survey period of October 11-18, 1976, the total settled sewage (activated sludge influent) feed rate to Units No. 3 and No. 4 averaged 29.5 mgd. From October 11-17, the total settled sewage feed rate to Units No. 1 and No. 2 averaged 16.1 mgd; these two units were taken out of service for renovation after October 17th.

3.2.6 Secondary Clarification (After Activated Sludge)

The mixed liquor from aeration tanks No. 1 and No. 2 flows to two parallel circular clarifiers, each 126 feet in diameter, with a surface area per tank of 12,500 square feet and with a volume per tank of 1,330,000 gallons. Similarly, each of the two circular clarifiers downstream of aeration tanks No. 3 and No. 4 is 180 feet in diameter, with a surface area of 25,400 square feet per tank and with a volume per tank of 2,300,000 gallons.

For all four activated sludge units together, an average of 0.94 mgd. of settled sludge was wasted. This sludge (labeled "F" in Figure 2), is added to dilution water from the trickling filter before mixing with the

primary sludge prior to treatment in the sludge thickener. A grab sample (No.9 on Figure 2) was taken of the return sludge, and another (No. 10) of the mixed liquor from aeration tank No. 2, for PCB analysis.

Table 5 lists average operating data for the two activated sludge units, for the survey period. Also listed in this table are "typical" design and operating data for the conventional activated sludge process, including final clarification. In most respects, the operation of the activated sludge units at the Baltimore POTW was within the ranges for "typical" operation.

A sampling station (No. 5 on Figure 2) was established in the common channel for the overflow from all four secondary clarifiers. This treated water flows to the Bethlehem Steel Company plant at Sparrows Point, where it is used as cooling water. As Figure 2 shows, there is a cross-connection which allows this treated water to be alternately discharged (after disinfection) to Back River.

3.2.7 Sludge Processing

The right-hand side of Figure 2 shows the sludge processing operations at the Baltimore POTW. Primary sludge (labeled "D"), averaging 2.1 mgd, flows through high rate degritters, and then is combined with a total flow of 13.1 mgd, made up of 0.9 mgd of wasted activated sludge (F) and of 12.2 mgd of dilution water from the trickling filter (G). The combined 15.2 mgd flows to 6 parallel sludge thickeners (two additional thickeners were out of service during the sampling period). The thickened sludge from all thickeners amounted to 0.57 mgd during the sampling period; the thickener overflow ("C" in Figure 2) of 14.6 mgd is returned to the head of the plant. A grab sample of thickened sludge (Point 11 on Figure 2) was obtained for PCB analysis.

There are six anaerobic high-rate sludge digesters in parallel, to which the thickened sludge is added. These digesters are maintained at 90 to 95°F with external recirculation and heat transfer circuits. The gas from one of the digesters was passed through a PCB-adsorbing column, which was then subjected to analysis. This is labeled as Point 13 on Figure 2. The total gas production from the digesters is normally 1,500,000 cubic feet per day; at the

Table 5 - Activated Sludge Operating Data, Baltimore POTW

	Tanks No. 1 & No. 2	Tanks No. 3 & No. 4	"Typical" Data[1,2]
Influent Flow, mgd	16.15	29.56	
Influent SS, mg/l	120	120	
Influent BOD, mg/l	154	154	
Return Sludge Flow, mgd	4.31	7.49	
Air Usage, million CF/day	36.30	49.75	
MLSS, mg/l	1,475	1,858	2,000-,2500[4]
MLVSS, mg/l	990	1,250*	
ML D.O., mg/l	5.6	4.0	
Sludge Volume Index, ml/g	87.4	84.0	50-100[4]
Effluent SS, mg/l	8.5	8.9	
Effluent BOD, mg/l	11.3	14.7	
Sludge Recycle, % of Influent	26.7	25.3	25[1,4],15-75[1,2]
Aeration Detention Time, hrs.	6.08	3.35	6-8[1],1-6[2],4-8[4]
Sludge Retention Time, days	3.9	2.7	5-15[1]
Organic Loading, lb BOD/day/lb MLSS	0.326	0.475	0.2-0.5[2,4]
F/M, lb BOD/day/lb MLVSS	0.485	0.708	0.3-0.5
Volumetric Loading, lb BOD/day/1000 CF	29.9	55.0	<40[1]
Clarifier Loading, lbs solids/day/sq.ft.	11.8	10.5	20-30[1]
Air Supplied, CF/lb BOD removed	1,890	1,440	800-1,500[1,4],768-1,000[2]
Air Supplied, CF/gallon total flow	1.78	1.34	0.4-1.5[2],0.5-2[4]
SS Removal Efficiency, Per Cent	92.9	92.6	85-95[1]
BOD Removal Efficiency, Per Cent	92.7	90.5	85-95[1]
Clarifier Overflow Rate, gpd/sq. ft.	820	730	400-800[1],800-1,000[2]
Clarifier Detention Time, hrs.	3.12	2.98	2-3[2]

*MLVSS for Tanks No. 3 & No. 4 estimated, based upon same MLVSS/MLSS ratio as Tanks No. 1 and No. 2.

time of this survey, the production was 893,000 cubic feet per day. Some is used for heating of the digesters and plant buildings. The digested sludge was withdrawn at an average rate of 0.62 mgd during the sampling period. A grab sample (Point 12 in Figure 2) was obtained for PCB analysis.

An average of 1.41 mgd of elutriation water (labeled "H") from the trickling filter, plus about 0.34 mgd of filtrate from the sludge vacuum filters, are added to the digested sludge, for a total of 2.37 mgd influent to two elutriation tanks in series. A polymeric flocculant is also added to the elutriation tanks. The overflow from the final elutriation tank (labeled "A"), amounting to 1.94 mgd, is returned to the head of the plant.

Additional polymer is added to condition the 0.43 mgd of transfer sludge prior to vacuum filtration. The filter cake, averaging 469 tons per day, with a solids content of 19.1 per cent, is then transported to sanitary landfill.

Table 6 is an approximate material balance of the Baltimore POTW, both for fluid flow and for solids. The balances may not exactly check out because of imprecision in measuring flows and concentrations, and because large capacities (e.g., sludge in the aerators, in the thickeners, and in the digesters) may have resulted in non-steady-state data for the survey period.

3.2.8 Operating Data

Table 7 lists the hydraulic, suspended solids, and organic loading data for the Baltimore POTW during the survey period, as supplied by the POTW personnel.

Table 6

Fluid Flow and Solids Balances, Baltimore POTW

	Stream Identification (Figure 2)	Flow Rate, mgd	SS Conc., mg/l	Solids in Stream, Pounds/Day
	Raw Influent Sewage	176.6	165*	243,000
(A)	Elutriation Tank Overflow Return	1.94	229(a)	3,700
(B)	Humus Tank Sludge Return	0.89	1,790	13,300
(C)	Thickener Overflow Return	14.64	229(a)	27,900
	Primary Treatment Influent	194.1 *	178*	287,000
(D)	Primary Sludge to Thickener	2.09*	4,220	73,300
	Primary Treatment Effluent	192.0	134*	214,000
(E)	Flushing Water Drawn Off	1.69	134*	1,900
	Trickling Filter Influent	144.6	134*	161,000
(G)	Dilution Water to Thickener	12.19*	41*	4,200
(H)	Elutriation Water to Elut. Tanks	1.41*	41*	500
	Humus Tank Influent	131.0	41*	44,700
	Humus Tank Overflow (Effluent)	130.1	29*	31,400
	Influent to Activated Sludge Units	45.71*	120*	45,600
	Return Sludge to Aerators	11.80*	7,930	780,000
	Influent to Act. Sludge Clarifiers	57.51	1,720*	825,000
	Effluent from Act. Sludge Clarifiers	44.77	9*	3,400
(F)	Wasted Activated Sludge to Thickener	0.94	7,930	62,300
	Total Return & Wasted Activated Sludge	12.74*	7,930	841,000
	Total Influent to Thickener	15.22	1,100	139,800
	Thickened Sludge to Digester	0.57	43,900(b)	209,000
	Digested Sludge to Elutriation	0.62*	33,900	175,200
	Filtered Sludge Cake to Landfill	—	—	172,000

*Measured by Baltimore POTW
(a) Estimated Equal SS Concentration for Streams A&C
(b) Measured by Versar

Table 7 - Flow and Suspended Solids and BOD Analyses, Baltimore POTW

	Day of Survey Period								Flow-Weighted Average
	1	2	3	4	5	6	7	8	
Flow Rate, mgd:									
1. Plant Influent	189.8	188.8	183.2	184.2	182.3	174.2	169.4	176.6	181.1
2. Primary Influent	207.3	206.3	200.7	201.7	199.8	191.7	186.9	194.1	198.6
3. Trickling Filter Influent	157.6	156.1	153.0	151.8	150.8	141.8	137.7	159.8	151.1
4. Activated Sludge Influent	46.0	46.2	43.8	46.2	45.9	45.9	45.4	30.2	43.7
5. Activated Sludge Effluent	45.2	45.2	42.9	45.3	45.0	45.0	44.3	29.2	42.8
6. Humus Tank Effluent	141.9	140.5	140.1	136.3	135.1	126.0	121.7	143.7	135.7
7. Plant Effluent to River	114.9	103.9	--	--	76.6	73.3	68.8	72.8	85.1
Suspended Solids, mg/l:									
1. Plant Influent	188	187	--	254	168	206	137	167	187
2. Primary Influent	180	152	104	224	196	228	180	156	177
3. Trickling Filter Influent	200	90	40	164	92	140	168	178	134
4. Activated Sludge Influent	140	104	36	176	96	136	120	152	116
5. Activated Sludge Effluent	9	4	4	19	6	12	9	8	9
6. Humus Tank Effluent	41	18	7	50	14	34	37	32	29
7. Plant Effluent to River	18	18	13	29	20	25	26	31	22
BOD_5, mg/l:									
1. Plant Influent	138	146	179	151	91	176	200	179	157
2. Primary Influent	119	130	183	154	--	218	196	183	168
3. Trickling Filter Influent	132	124	148	115	171	208	166	148	151
4. Activated Sludge Influent	142	126	187	146	82	199	162	187	151
5. Activated Sludge Effluent	10	6	16	14	6	22	13	18	13
6. Humus Tank Effluent	7	5	20	24	22	48	18	20	20
7. Plant Effluent to River	6	2	18	22	6	22	13	18	10

4.0 PROCEDURES FOR PCBS SAMPLING AND ANALYSIS

4.1 Collection, Transport, and Compositing of Samples

Table 8 summarizes the stations at the two POTWs for the collection of samples for subsequent PCB analysis. The sample station locations are shown on Figure 1 for Bloomington and Figure 2 for Baltimore. The main wastewater streams at the plants (BL-1 through BL-5, and BA-1 through BA-6) were sampled once each hour, 24 hours per day for the duration of the sampling periods, into individual 100-ml graduated glass bottles. The sampling periods were 10 days at Bloomington and 7 days at Baltimore. For stations BL-6 and BA-7, one sample was collected into a quart bottle once each 8-hour shift for the duration of the sampling period. Each of the sludge and sediment samples (BL-7, BL-8, BL-10 through BL-15, and BA-8 through 12) was a single grab sample collected in a quart bottle. Each individual wastewater, sludge, and sediment sample was collected in its own bottle, which had previously been cleaned and dried. Teflon or aluminum foil cap liners were used. The field crew preserved each sample with a 37 per cent formalin solution (1.5 ml per 100 ml of sample).

The digester gas sample (BA-13) was an adsorbent column through which digester gas at a controlled and measured flow rate was passed for a measured time period.

The 1,241 individual samples at the Bloomington POTW were collected by an EPA field sampling crew from the Evansville, Indiana, field office of EPA Region V. The preserved samples were refrigerated and shipped via air freight once each day to Washington National Airport, and then transported by Versar personnel to the Versar Springfield, Virginia , laboratories where they were again placed under refrigeration. The total transport time from the Bloomington POTW to the Versar laboratory was about 6 hours. The EPA Region V Chain of Custody Procedures were adhered to.

The 1,035 individual samples at the Baltimore POTW were collected by a Versar field sampling crew. The preserved samples were transported once each day (a 2-hour trip) to the Versar Springfield, Virginia , laboratories where they were placed under refrigeration.

Table 8 - Summary of Sampling Stations

(BL = Bloomington, BA = Baltimore)

Station	Description of Sampled Stream	Type of Samples*	Number of Samples
BL-1	Primary Influent	H	240
BL-2	North Primary Effluent	H	240
BL-3	South Primary Effluent	H	240
BL-4	Secondary Clarifier Effluent	H	240
BL-5	Final Lagoon Effluent	H	240
BL-6	Trickling Filter Effluent	S	30
BL-7	Primary Sludge	G	2
BL-8	Digested Sludge	G	3
BL-10,11,12,13,14,15	Lagoon Sediment (6 locations)	G	6
BA-1	Plant Influent	H	168
BA-2	Primary Influent	H	168
BA-3	Trickling Filter Influent	H	168
BA-4	Activated Sludge Influent	H	168
BA-5	Activated Sludge Clarified Effluent	H	168
BA-6	Trickling Filter Clarified Effluent	H	168
BA-7	Final Effluent	S	21
BA-8	Sludge, Trickling Filter Clarifier	G	1
BA-9	Sludge, Activated Sludge Clarifier	G	1
BA-10	Mixed Liquor from Aerator	G	1
BA-11	Thickened Sludge	G	1
BA-12	Digested Sludge	G	1
BA-13	Digester Gas	A	1

* Type of Samples:

H - Hourly, 24 per day
S - Once each 8-hour shift, 3 per day
G - Single grab sample during sampling period
A - Adsorbed from gas stream, once during sampling period

At the Bloomington POTW, each of the wastewater samples (BL-1 through BL-5) was (roughly) volumetrically proportioned according to the hourly plant influent flow rate, on the basis of 100 ml for each sample for the maximum hourly flow rate, using the graduations on the sample bottles. At this small plant, the field crew had relatively easy manual access to the flow channels to permit this partial filling operation. At the much larger Baltimore POTW, however, the field crew was forced to use a bottle holder at the end of a long pole to reach the wastewater in the channels, prohibiting the partial filling of a bottle. Hence, all wastewater samples from Baltimore were full bottles.

The basic sampling procedure followed at both Bloomington and Baltimore was designed to strictly avoid any technique which might partition PCBs. Since PCBs adhere to the glass surfaces of bottles, and strongly adhere to finely-divided suspended solids in the wastewaters, each sample was collected in a clean and dry bottle without pre-rinsing of the bottle in the wastewater stream, without emptying part of a collected sample from a bottle (which precluded flow proportioning at Baltimore), and without any transfer of sample between bottles. This basic principle of avoiding PCBs partitioning was the reason for individual sample bottles to be shipped to the laboratory, as opposed to the conventional procedure (used for parameters other than PCBs) of compositing in the field. Such compositing would have biased the results by leaving PCBs in the original collection bottles.

For each main sampling station (BL-1 through BL-5, and BA-1 through BA-6), 24 individual samples were collected for each day of the survey period. The 24 samples were combined by adding all of each sample to the daily composite. The composite aqueous sample was then extracted with the hexane/methylene chloride, at a volumetric ratio of 2:1 (aqueous:organic). The organic extract was then concentrated by evaporation, to 10 ml. Each of the grab samples was similarly extracted and concentrated.

After compositing, the number of samples subsequently extracted, concentrated, and analyzed was 126 (71 from the Bloomington POTW, and 55 from the Baltimore POTW).

The daily composite PCBs samples from the Bloomington POTW correspond with the daily flow, suspended solids, and BOD data. However, the PCBs samples from the Baltimore POTW were collected (and composited) for 24 hours starting at 12 noon - the first "day" was 10/11/76 - 10/12/76. The flow, suspended solids, and BOD data from the Baltimore POTW were reported for each day starting at 12 midnight on 10/11/76.

4.2 Analysis of Samples from the Bloomington POTW

After concentration of the organic extract to 10 ml, one µl was injected into a Hewlett Packard Model 5710A gas chromatograph, with a column of 1.5 per cent OV-17 plus 1.95 per cent QF-1 100/120 GCQ, operated at a temperature of 210°C.

A quantitative calibration curve was obtained by injecting 1, 5, and 10 ng of Aroclor 1016 and measuring selected peak areas. Upon comparison of sample chromatograms with calibration chromatograms of Aroclor 1016, an unambiguous identification was made that the PCBs in the sample were, in fact, the same isomers, in appropriate proportions, as those in Aroclor 1016. Figure 3 shows an Aroclor 1016 calibration chromatogram and a typical sample chromatogram. All Bloomington samples showed the characteristic peaks of Aroclor 1016. In addition, the grab sediment samples from the Bloomington polishing lagoon (BL-10 through BL-15) showed qualitative evidence of Aroclor 1232 in minor amounts.

Since the wastewater samples from Bloomington yielded chromatograms that were virtually identical to those of Aroclor 1016 standards, the total PCBs in the samples were calculated as Aroclor 1016, by calibration with known quantities of Aroclor 1016 standards.

Five of the composited samples were re-analyzed after passage through a florisil clean-up column. The peak areas of the original and the cleaned-up sets only differed by an average of 20 per cent, with no observable bias. This 20 per cent difference is roughly the same as the two-sigma confidence interval obtained in serial replicates of standards:

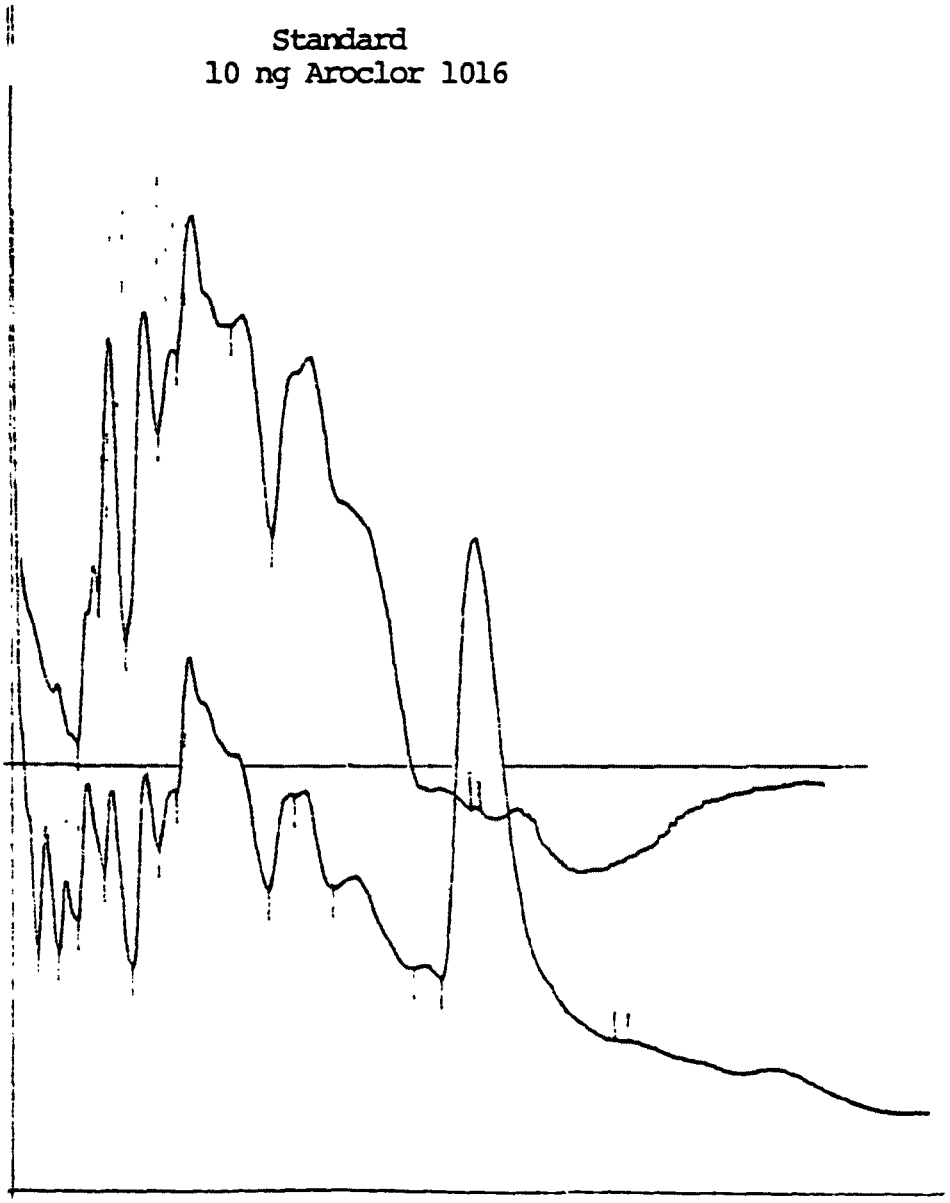

9/23/76 Composite Sample BL-1,
Bloomington,POTW Influent

Figure 3
Chromatograms of Standard and of Typical Bloomington Sample

Aroclor 1016 Standard, ng	Concentration in Calibration Std, ppb	2σ Confidence Interval, Per Cent
1	20	± 18
5	100	± 25
10	200	± 18

Since there was no apparent interference with the analysis for Aroclor 1016 PCB isomers, the potential for analytically-significant losses during florisil cleanup was avoided. All Bloomington samples were therefore analyzed using single extraction and concentration.

Experience in PCB analysis at the Versar laboratory predicts a recovery of PCB from the samples to be in excess of 72 per cent of the amount present. The data reported is the amount extracted with no correction applied for recovery efficiency.

4.3 Analysis of Samples from the Baltimore POTW

The extraction, concentration, and gas chromatograph procedures for the Baltimore POTW samples were essentially the same as those for the Bloomington POTW samples. A major difference existed, however, in the identification and quantification of the PCBs in the Baltimore samples: there was no standard of a commercial PCB mixture which yielded a chromatogram directly comparable to a sample chromatogram. The Baltimore chromatograms displayed a mixture of PCB isomers, unlike the "fingerprint" of individual commercial mixtures such as Aroclors 1016, 1232, 1242, 1248, 1254, or 1260. Figure 4 is a typical chromatogram of a Baltimore POTW sample. In this case, mono-, di-, tri-, and other chloro isomer peaks were identified by their relative retention times (RRT) on chromatographic columns in comparison with standard PCB isomers (not commercial mixtures) obtained from Monsanto. Remaining peaks on the sample chromatograms, not matching the peaks of the standard pure isomers available for comparison, were then matched with the peaks from standard commercial mixtures (Aroclors 1016, 1232, 1242, 1248, and 1254).

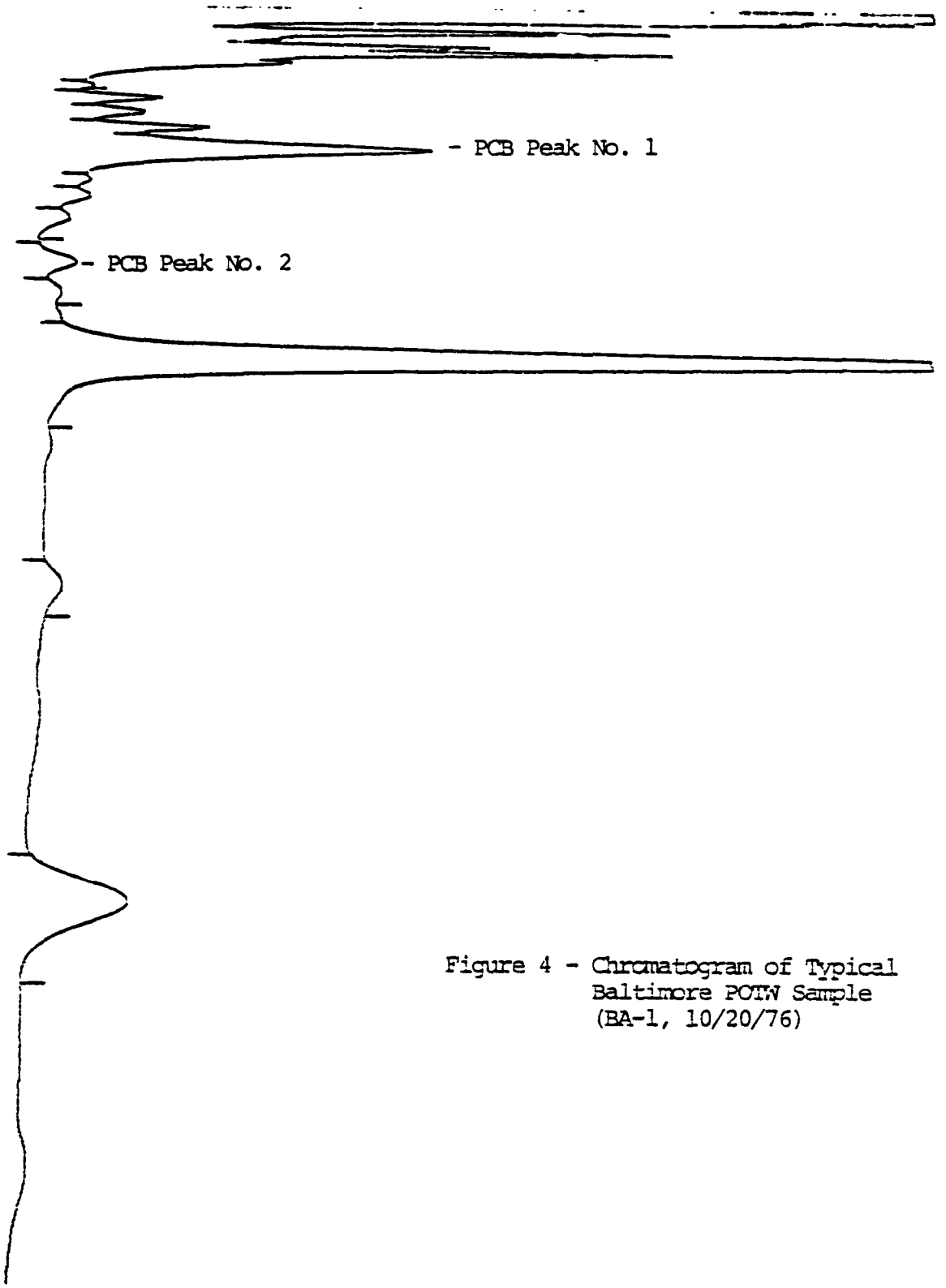

Figure 4 - Chromatogram of Typical Baltimore POTW Sample (BA-1, 10/20/76)

Careful scrutiny of all peaks on the sample chromatograms allowed a number to be eliminated from consideration as PCB peaks, since the same peaks appeared in blanks and were ascribed to solvent constituents. Aroclor 1232 was eliminated because of its very minor past and present use and unlikelihood of its significant appearance in the Baltimore wastewater.

Standards and selected Baltimore samples were also subjected to mass spectrometric analysis at the Naval Research Laboratory Finnigan Model 3000 spectrometer. The hexane extracts of Baltimore POTW samples verified the presence of mono-chloro, di-chloro, tri-chloro, tetra-chloro, and penta-chloro biphenyls, and some indication of higher mass clusters. Only two unknown clusters with masses of 231 and 282 were observed. This indicates a significant lack of potential interference from unknown species in the gas chromatographic analysis.

Two peaks on the sample chromatograms were selected as representing PCBs. These peaks, identified on Figure 4, had retention times of 153 to 160 seconds (Peak No. 1), and of 254 to 261 seconds (Peak No. 2), relative to an Aldrin retention time of 175 seconds under the same conditions.

Peak No. 1 in the Baltimore sample chromatograms corresponds in retention time with the major peak in chromatograms of both Aroclors 1242 and 1016. In the Aroclor 1242 standard, the area under this peak represents 48 per cent of the total area under all peaks; in Aroclor 1016, 33 percent. This peak also is fairly representative in terms of retention time (a qualitative measure of the number of chlorines in the PCB isomers) - about one-third of the other peaks in the Aroclor 1242 standard have lower retention times, and about one-half in the Aroclor 1016 standard.

Peak No. 2 in the Baltimore sample chromatograms corresponds in retention time with the next-largest peak in the Aroclor 1242 standard (it accounts for 16 percent of all the area in the standard chromatogram). Peak No. 2 is also present in the Aroclor 1016 chromatogram, but to a smaller degree. About one-third of the other peaks in the Aroclor 1242 standard have greater retention times than Peak No. 2; this peak is the last significant peak in the Aroclor 1016 standard chromatogram.

Together, Peaks No. 1 and No. 2 account for 64 percent of the total area under the Aroclor 1242 standard, and cover both lower - and higher - chlorinated isomers. The sum of the areas of these two selected peaks was therefore used for calculation of PCBs concentration in the Baltimore POTW samples, and the concentrations are reported as Aroclor 1242 concentrations.

Of the 52 sample chromatograms (including 10 replicates), three were rejected because the retention times of the selected peaks fell outside the ranges quoted previously. These were Station BA-3, Day 5; and Station BA-4, Day 4 (both replicates).

The replicate results (after rejection of three analyses) are presented in Table 9. The pooled estimate of the standard deviation (with 9 degrees of freedom) is 21.6 percent of the mean concentration. This is twice the standard deviation (10 percent) obtained in measuring concentrations of standard Aroclors in water.

Table 9 - Precision of PCBs Measurements
Baltimore POTW

Station Day	BA-1 1	BA-2 1	BA-2 2	BA-3 3	BA-5 5	BA-6 6	BA-6 7
Replicate A: PCBs, µg/l	13.45	16.23	14.20	13.17	1.96	2.84	3.16
Replicate B: PCBs, µg/l	11.14	---	17.12	5.87	1.93	2.06	--
Replicate C: PCBs, µg/l	11.40	15.60	---	---	1.83	--	2.36
Mean: PCBs, µg/l	12.00	15.92	15.66	9.52	1.91	2.45	2.76
Standard Deviation, µg/l	1.26	0.45	2.07	5.16	0.07	0.55	0.57
Std. Dev. as Pct. of Mean	10.6	2.8	13.2	53.4	3.6	22.5	20.5
Degrees of Freedom	2	1	1	1	2	1	1

Note: Replicate C is a repeat chromatogram of the same concentrate as Replicate A; Replicate B is a chromatogram of a repeat extraction and concentration as Replicate A.

5.0 PCBs DATA AND ANALYSIS OF RESULTS

5.1 PCBs Concentration Data

Tables 10 and 11 (respectively) list the PCBs concentrations for the Bloomington POTW and for the Baltimore POTW. The PCBs concentrations at Bloomington are an order of magnitude higher than at Baltimore, the result of the discharge of Aroclor 1016 by the Westinghouse capacitor plant to the Bloomington sewer system.

5.1.1 Analysis of Variance in Concentration Data

The mean concentration of PCBs at each station, and the day-to-day standard deviation for each station, are presented in Tables 10 and 11. At this stage, one additional data point was rejected - the result for Baltimore POTW Station BA-4 on Day 3, which was 18.7 μg/l PCBs. With this data point included, the standard deviation about the mean for Day 3 was 4.66 μg/l; without this data point, the standard deviation was 2.08 μg/l. The value of the F statistic of $(4.66/2.08)^2 = 5.03$, with 5 and 4 degrees of freedom for numerator and denominator respectively, is significant at the 90 percent confidence level, justifying rejection of this data point.

It is apparent from Tables 10 and 11 that much greater day-to-day variability occurred at Bloomington than at Baltimore. The pooled estimate of standard deviation for all stations at the Bloomington POTW was 42 percent of the respective mean, while it was 20 percent at the Baltimore POTW. The much higher day-to-day variability in the data of the Bloomington POTW is explained by the high dependence of the influent PCBs concentration upon a single industrial discharge, which indeed does vary widely in time (as demonstrated by the discharge data in Section 2.3.1). Conversely, the sources of PCBs to the Baltimore POTW are much more diffuse, and the plant influent PCBs concentrations do not vary significantly from day-to-day.

The high day-to-day variability in the Bloomington POTW primary influent PCBs concentration (S = 59 percent of the mean) is reflected in the high variability in the PCBs concentrations in the North and South primary

Table 10 - PCBs Concentrations, µg/l as Aroclor 1016
Bloomington POTW

	BL-1	BL-2	BL-3	BL-2,BL-3	BL-4	BL-5
Station	Primary Influent	North Primary Effluent	South Primary Effluent	Average Primary Effluent	Secondary Clarifier Effluent	Final Lagoon Effluent
Day 1	222	68	108	88	26	11
Day 2	236	100	62	81	26	22
Day 3	124	64	56	60	22	28
Day 4	216	74	84	79	28	18
Day 5	84	38	68	53	34	30
Day 6	280	56	42	49	36	14
Day 7	50	38	38	38	24	12
Day 8	54	46	46	46	20	10
Day 9	110	42	24	33	22	14
Day 10	72	34	28	31	20	16
Mean	145	56	56	56	26	18
S, Std. Dev.	85	21	26	21	6	7
S/Mean, %	59	37	46	37	21	39

Table 11

PCBs Concentrations, μg/l as Aroclor 1242
Baltimore POTW

Station	BA-1	BA-2	BA-3	BA-4	BA-3, BA-4	BA-5	BA-6
	Plant Influent	Primary Influent	Trickling Filter Influent	Activated Sludge Influent	Avg. Influent to Secondary Processes	Activated Sludge Effluent	Humus Tank Effluent
Day 1	12.0	15.9	5.6	7.2	6.4	1.79	2.95
Day 2	14.8	15.7	9.3	11.9	10.6	1.34	1.98
Day 3	14.2	16.7	9.5	---	9.5	0.99	2.37
Day 4	15.9	18.8	11.4	---	11.4	1.93	2.39
Day 5	17.1	16.5	---	6.6	6.6	1.91	2.81
Day 6	18.0	19.2	11.7	9.0	10.4	1.85	2.45
Day 7	13.7	11.9	5.6	7.1	6.4	1.59	2.76
Mean	15.1	16.4	8.9	8.4	8.8	1.63	2.53
S, Std. Dev.	2.1	2.4	2.7	2.1	2.2	0.35	0.33
S/Mean, %	14	15	30	22	25	22	13

effluents (S = 37 and 46 percent, respectively), although some damping may have occurred. The standard deviation about the mean for the Bloomington secondary clarifier effluent PCBs concentration is only 21 percent, indicating that the trickling filter and secondary clarifiers provide sufficient capacitance for PCBs so that wide day-to-day swings in the PCBs concentration influent to this secondary treatment process are considerably damped. The PCBs concentration in the final lagoon effluent varies much more widely, with a standard deviation of 39 percent of the mean. Since the lagoon detention time is so large, 7.5 days, it would be expected that day-to-day swings in the lagoon influent concentration (the primary effluent bypassed around the trickling filter as well as the secondary clarifier overflow) would be completely damped. The wide day-to-day variability of the lagoon effluent concentrations are probably attributable to day-to-day differences in wind-induced turbulence in the shallow lagoon which cause resuspension of PCB-laden fine solids.

The mean PCBs concentrations for the North and South primary effluents at the Bloomington POTW were the same - 56 μg/l. Although the overflow rate in the North bank of primary clarifiers was considerably higher, the overflow rates of both banks were well within the guidelines for good primary clarification (no independent measures of suspended solids removal are available). It is therefore assumed that both banks of clarifiers did indeed have equivalent PCBs effluent concentrations, and the daily averages are listed in Table 10. The day-to-day differences between BL-2 and BL-3 therefore provide a direct measure of the total uncertainty in sampling, compositing, extracting, concentration, and chromatographic analysis:

Day	1	2	3	4	5	6	7	8	9	10
Std. Dev., μg/l	28	27	6	7	21	10	0	0	13	4
Std. Dev., % of Mean	32	33	9	9	40	20	0	0	39	14

The pooled estimate of the standard deviation is 24.5 percent of the mean concentration. This represents the total imprecision in each PCBs concentration data point at Bloomington.

Similarily, it may be assumed that the PCBs concentrations are equivalent for the Baltimore POTW stations BA-3 and BA-4 (the trickling filter influent and the activated sludge influent, respectively). Both stations are in the same wastewater channel, and the mean PCBs concentrations are very close: 8.9 and 8.4 μg/l. Moreover, the data of Table 7 show that the mean concentrations of suspended solids at the two stations (134 and 116 mg/l) and of BOD_5 at the two stations (151 and 151 mg/l) are also close. Table 11 lists the average PCBs concentrations for these two stations. The day-to-day differences between BA-3 and BA-4 provide a direct measure of the total uncertainty in sampling, compositing, extraction, concentration, and chromatographic analysis:

Day	1	2	6	7
Std. Dev., μg/l	1.1	1.8	1.9	1.1
Std. Dev., % of Mean	18	17	18	17

The pooled estimate of the standard deviation is 17.5 percent of the mean concentration. This represents the total imprecision in each PCBs concentration data point at Baltimore. Pooling this value (with 4 degrees of freedom) with the Bloomington value of 24.5 percent (with 10 degrees of freedom) yields an overall imprecision in each PCBs concentration data point, for both POTWs, of 22.7 percent of the concentration. This value is essentially the same as the standard deviation, 21.6 percent, of replicate extraction, concentration, and chromatographic analysis (as derived in Section 4.3). Hence, the sampling and 24-hour compositing procedures followed at these two POTWs did not appreciably add to the measurement uncertainties introduced by the laboratory procedures.

When the pooled standard deviation of measurement, 22.7 percent, is compared with the day-to-day standard deviations at each station in Table 11, it is apparent that the PCBs concentrations at the Baltimore POTW did not vary significantly from day to day. The same comparison made with the day-to-day standard deviations at each station in Table 10, however, indicate that only the

secondary clarifier effluent (Station BL-4) remained relatively the same; and that the PCBs concentrations at the other Bloomington POTW stations did vary significantly from day to day.

5.1.2 Uncertainty in Derived PCBs Removal Efficiencies

The PCBs removal efficiency for any treatment process (or for any series combination of processes) is defined as $\eta = 100(1 - C_E/C_I)$,

where: η = PCBs removal efficiency, percent

C_E = PCBs concentration in effluent

C_I = PCBs concentration in influent.

Based upon error theory,

$$(\Delta\eta)^2 \cong \left(\frac{\partial\eta}{\partial C_I}\right)^2 (\Delta C_I)^2 + \left(\frac{\partial\eta}{\partial C_E}\right)^2 (\Delta C_E)^2,$$

Where ΔC_I and ΔC_E are (respectively) the measurement errors in PCBs concentration in the influent and effluent, and where $\Delta\eta$ is the resultant error in the calculated removal efficiency.

If the percent errors are the same for C_E and C_I, e.g., if $\Delta C_E/C_E = \Delta C_I/C_I = \Delta C/C$, the error in the calculated removal efficiency is

$$\Delta\eta = 100\sqrt{2}\,(\Delta C/C)(100 - \eta).$$

Since $\Delta C/C = 0.227$,

$$\Delta\eta = 0.321\ (100 - \eta).$$

The uncertainty in the PCBs removal efficiency thus depends not only upon the uncertainty in PCBs concentrations, but upon the <u>value</u> of removal efficiency itself:

η, %	10	25	50	75	90	95
$S\eta = \Delta\eta$, %	29	24	16	8	3	2

The higher the efficiency, therefore, the better known it is.

$S\eta$, the standard deviations for the removal efficiency (listed above) apply to daily values, since they are based upon the uncertainty in daily PCBs concentration values. $S\eta$ is a measure of the uncertainty in each daily removal efficiency value. When, as in this study, several days' data are obtained so that several values of the removal efficiency η exist, the average removal efficiency is more precisely known than is each daily value. The standard error of the mean PCBs removal efficiency ($S\bar{\eta}$) over N days is:

$$S_{\bar{\eta}} = \frac{S\eta}{\sqrt{N}} = \frac{\Delta\eta}{\sqrt{N}} = \frac{0.321}{\sqrt{N}} (100 - \bar{\eta})$$

5.2 Overall PCBs Removal Efficiencies

The overall PCBs removal efficiencies for each of the two POTWs is derived from the mean PCBs concentrations at the plant influent and effluent. The values, along with $\pm 2S_{\bar{\eta}}$ confidence limits, are listed in Table 12. Also in Table 12 are the corresponding removal efficiencies achieved for suspended solids and for BOD (from the data of Tables 3 and 7). The PCBs removal efficiencies are comparable to, but slightly less than, the corresponding removal efficiencies for suspended solids and for BOD. There is very little doubt, based upon these overall plant data, that POTWs do in fact effectively remove PCBs from wastewaters.

5.3 PCBs Removal in Primary Sedimentation

5.3.1 The Bloomington POTW Primary System

Table 13 lists the daily PCBs removal efficiencies in the Bloomington POTW primary system, derived from the concentration data of Table 10. The mean removal efficiency is 53 percent. Listed next in Table 13 are the daily values of the influent PCBs concentration from Table 10; and a normalized version of this concentration about the mean influent concentration of 145 µg/l. Figure 5 shows that the PCBs removal efficiency depends upon the influent PCBs concentration - the higher the influent concentration, the higher the efficiency. The straight line of Figure 5 has the equation

$$\hat{\eta} = 48.5 + 33\ (C-145)/145.$$

Table 12 - Overall Removal Efficiencies

POTW	Treatment Systems	PCBs Removal Efficiency, Percent	Suspended Solids Removal Efficiency, Percent	BOD_5 Removal Efficiency, Percent
Bloomington	All, Including Final Lagoon	88 ± 22	95	91
Bloomington	Primary and Secondary	82 ± 4	86	81
Baltimore	Primary and Activated Sludge	89 ± 3	95	92
Baltimore	Primary and Trickling Filter	83 ± 4	84	87

Table 13

Removal Efficiencies, Bloomington POTW

	1	2	3	4	5	6	7	8	9	10	Mean
Primary System:											
η PCBs, %	60	66	52	63	37	83	24	15	70	57	53
C, Influent PCBs, μg/l	222	234	124	216	84	280	50	54	110	72	145
(C-145)/145	+0.53	+0.63	-0.14	+0.49	-0.42	-0.93	-0.66	-0.63	-0.24	-0.50	0.00
Δη	-17	-21	+5	-16	+14	-31	+22	+21	+8	+16	0
η' PCBs, %	43	45	57	47	51	52	46	36	78	73	53
B, Influent BOD, mg/l	240	240	313	250	220	305	220	330	173	203	249
(B-249)/249	-0.04	-0.04	+0.26	0.00	0.12	+0.22	-0.12	+0.33	-0.31	-0.18	0.00
Δη'	-3	-3	+10	0	-8	+15	-8	+22	-21	-12	0
η" PCBs, %	40	42	75	47	43	67	38	50	57	61	53
Secondary System:											
η PCBs, %	70	68	63	65	36	27	37	57	33	35	49
C, Influent PCBs, μg/l	88	81	60	79	53	49	38	46	33	31	56
(C-56)/56	+0.57	+0.45	+0.07	+0.41	-0.05	-0.13	-0.32	-0.18	-0.41	-0.45	0.00
Δη	-22	-17	-3	-16	+2	+5	+12	+7	+16	+17	0
η' PCBs, %	48	51	60	49	38	32	49	64	49	52	49

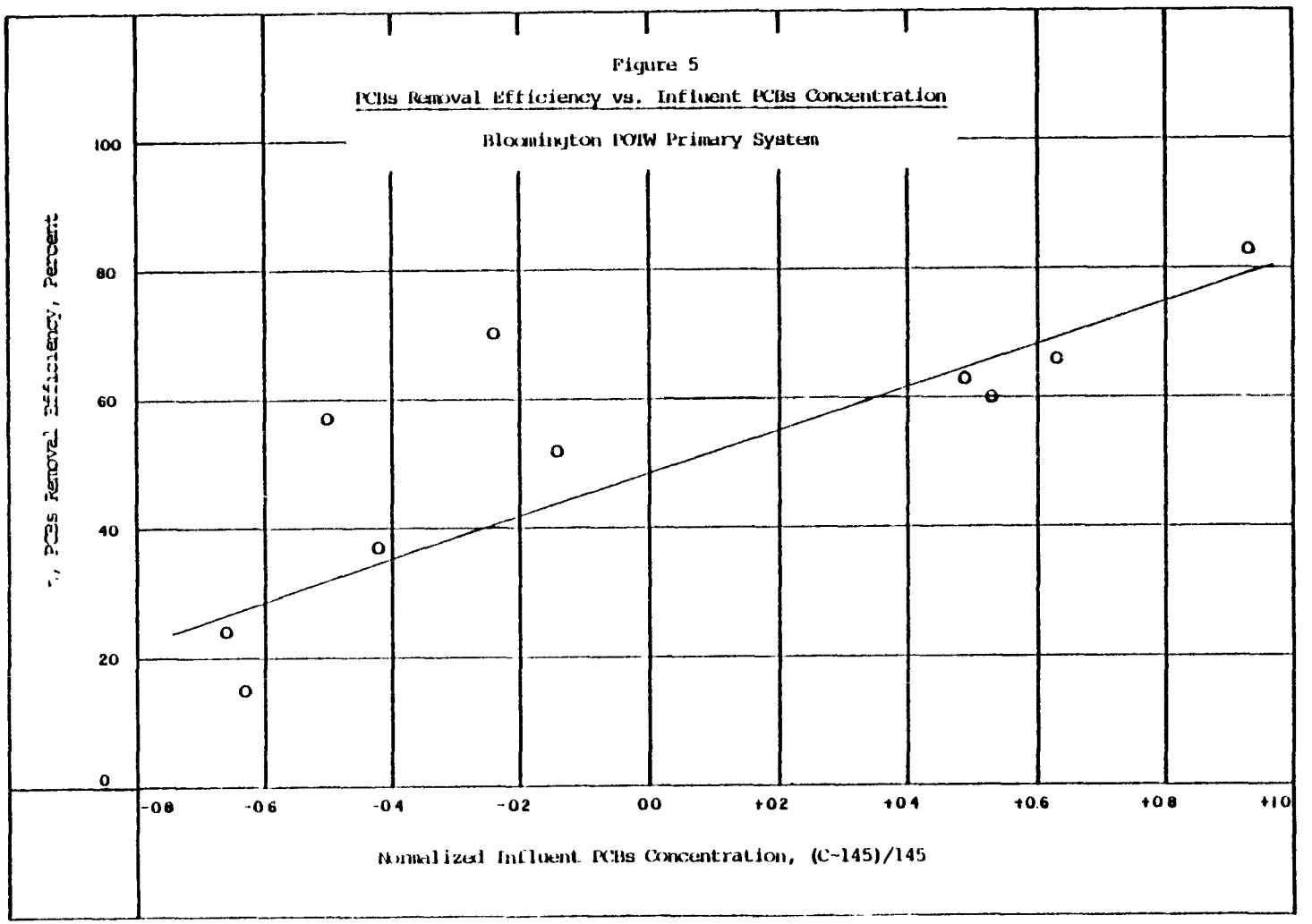
Figure 5
PCBs Removal Efficiency vs. Influent PCBs Concentration
Bloomington POTW Primary System
% PCBs Removal Efficiency, Percent
100
80
60
40
20
0
-08
-06
-04
-02
00
+02
+04
+06
+08
+10
Normalized Influent PCBs Concentration, (C-145)/145

An explanation for this dependence is the PCBs damping capacity of the primary clarifiers - in the clarified water, in the settled sludge, and upon the structural surfaces of the clarifiers. Thus, a temporary higher-than-average PCBs concentration in the influent would not immediately and proportionately be observed in the effluent, resulting in a temporary higher apparent PCBs removal efficiency.

This damping phenomenon is demonstrated by the day-to-day concentration variations in Table 10. Although the standard deviation for the primary influent is 59 percent, the standard deviation for the average primary effluent is only 37 percent.

The next line in Table 13 is a correction to each daily PCBs removal efficiency, to normalize the efficiency to an average influent PCBs concentration of 145 μg/l. This correction is $\Delta\eta = -33\ (C-145)/145$. Next, in Table 13 is the normalized efficiency, $\eta' = \eta + \Delta\eta$.

A similar exercise is next performed, using the influent BOD_5 concentration from Table 3 as the independent variable. Figure 6 shows that η', the PCBs removal efficiency (already normalized for its dependence upon the influent PCBs concentration), is dependent upon the influent BOD_5 concentration. The equation of the straight line in Figure 6 is

$$\hat{\eta}' = 59.0 - 68\ (B-249)/249.$$

One explanation of this dependence is that the higher the BOD concentration, the more soluble the PCBs may be in the water phase, thereby inhibiting the direct removal of PCBs with solids via the primary clarification process.

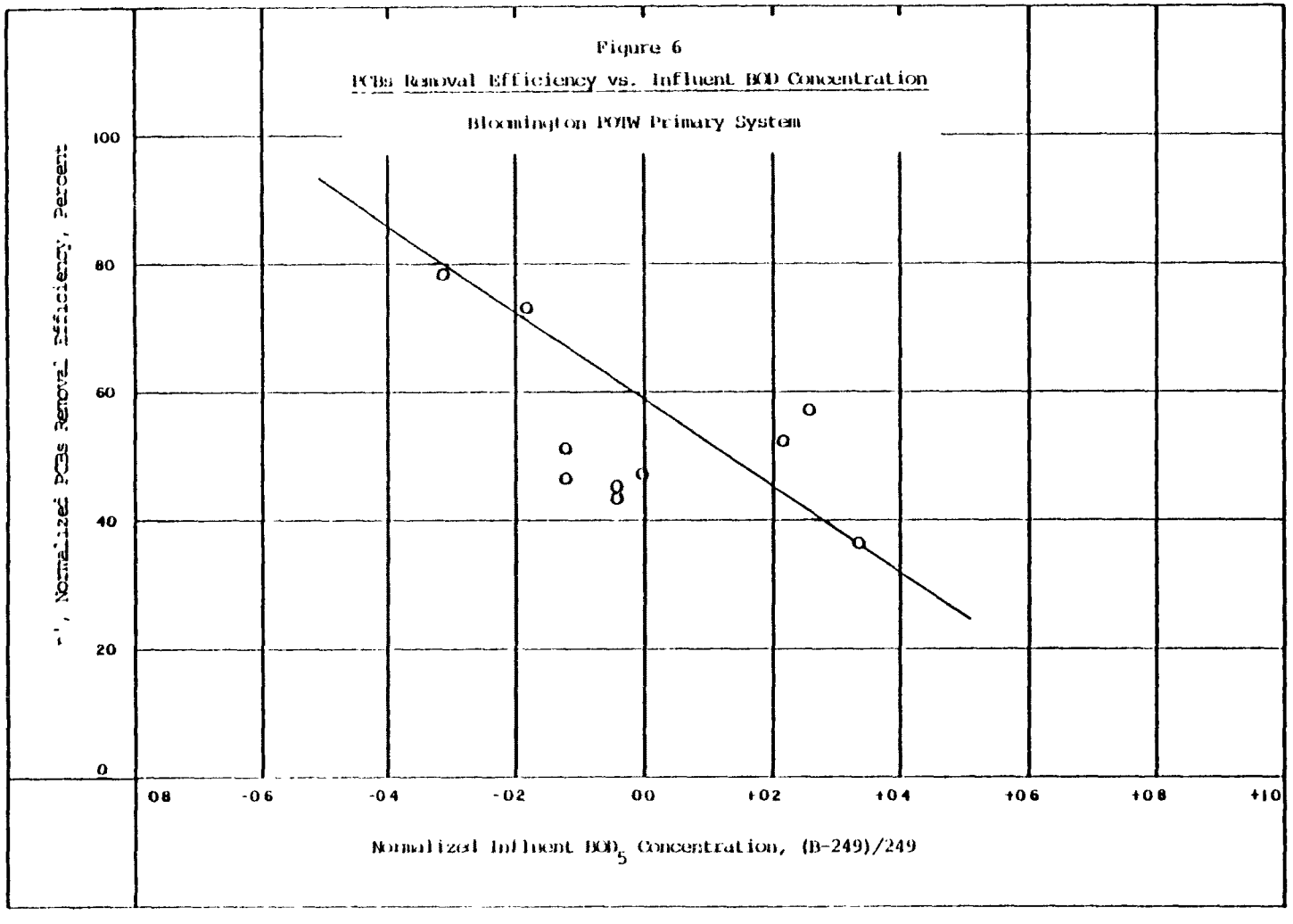
Figure 6
PCBs Removal Efficiency vs. Influent BOD Concentration
Bloomington POTW Primary System
Normalized PCBs Removal Efficiency, Percent
100
80
60
40
20
0
08
-06
-04
-02
00
+02
+04
+06
+08
+10
Normalized Influent BOD_5 Concentration, (B-249)/249

The correction (for influent BOD concentration) is made to each daily PCBs removal efficiency by $\Delta\eta' = + 68\ (B - 249)/249$; and then the normalized efficiency is calculated by $\eta'' = \eta' + \Delta\eta'$. The mean for the normalized PCBs removal efficiency is not changed by this stepwise multiple regression process. A predictive equation for the daily PCBs removal efficiency at the Bloomington POTW primary system is:

$$\hat{\eta} = 53 + 33\left(\frac{C - 145}{145}\right) - 68\left(\frac{B - 249}{249}\right)$$

The day-to-day standard deviation of η_{PCBs}, the raw PCBs removal efficiency, is 21.3 percent (with 9 degrees of freedom). The day-to-day standard deviation of η''_{PCBs}, the PCBs removal efficiency normalized for the daily variations in the primary influent PCBs and BOD concentrations, is 14.3 percent (with 7 degres of freedom). The predicted standard deviation in the PCBs removal efficiency (from Section 5.1.2) at $\eta = 53$ percent is 15.1 percent. Hence, the residual variance in the daily values of η''_{PCBs} is attributable to the uncertainties in the measured PCBs concentrations.

For the 10-day average PCBs removal efficiency, the standard error of the mean is $14.3/\sqrt{10} = 4.5$ percent. The two-sigma confidence interval around the normalized PCBs removal efficiency for the Bloomington POTW primary system is therefore 53 ± 9 per cent.

5.3.2 The Baltimore POTW Primary System

Since the day-to-day variations in the PCBs concentrations are attributable to the measurement uncertainties, the mean concentrations will be used to derive a PCBs removal efficiency. This efficiency is 100(1 - 8.8/16.4) or 46 percent. The predicted standard deviation (from Section 5.1.2) at $\eta = 46$ percent is 17.2 percent, and the standard error of the 7-day mean is $17.2/\sqrt{7} = 6.5$ percent. The two-sigma confidence interval is therefore 46 ± 13 percent for the Baltimore POTW primary system PCBs removal efficiency.

5.4 PCBs Removal in Secondary Treatment

5.4.1 The Bloomington POTW Trickling Filter System

Table 13 lists the daily PCBs removal efficiencies for the Bloomington POTW trickling filter system, derived from the concentration data of Table 10. The mean removal efficiency is 49 percent. In a similar fashion to the regression analysis in Section 5.3.1, Table 13 also lists the PCBs concentrations influent to the secondary system, and their normalized versions. Figure 7 shows the strong dependence:

$$\hat{\eta} = 49 + 38\ (C - 56)/56,$$

which is explained by the same damping capacity arguments made for the primary system. As Table 10 indicates, the day-to-day standard deviation in the secondary effluent is 21 percent, damped from the 37 percent for the secondary influent.

The correction is $\Delta\eta = -\ 38\ (C-56)/56$, and Table 13 lists daily values of the normalized efficiency, $\eta' = \eta + \Delta\eta$.

The day-to-day standard deviation of η_{PCBs}, the raw removal efficiency, is 16.9 percent (with 9 degrees of freedom). The comparable number for η'_{PCBs}, the removal efficiency normalized for the daily variations in the secondary influent PCB concentration, is 9.8 percent (with 8 degrees of freedom). The predicted standard deviation in the PCBs removal efficiency (from Section 5.1.2) at $\eta = 49$ percent is 16.3 percent. The residual variance in the daily values of η'_{PCBs} is attributable to the measurement uncertainties.

The standard error of the 10-day mean is $9.8/\sqrt{10} = 3.1$ percent, and the two-sigma confidence interval around the normalized PCBs removal efficiency for the Bloomington POTW secondary system is therefore 49 ± 6 percent.

5.4.2 The Baltimore POTW Secondary Systems

The PCB removal efficiencies (based upon the mean concentrations of Table 11) and the associated reliability estimates, are as follows:

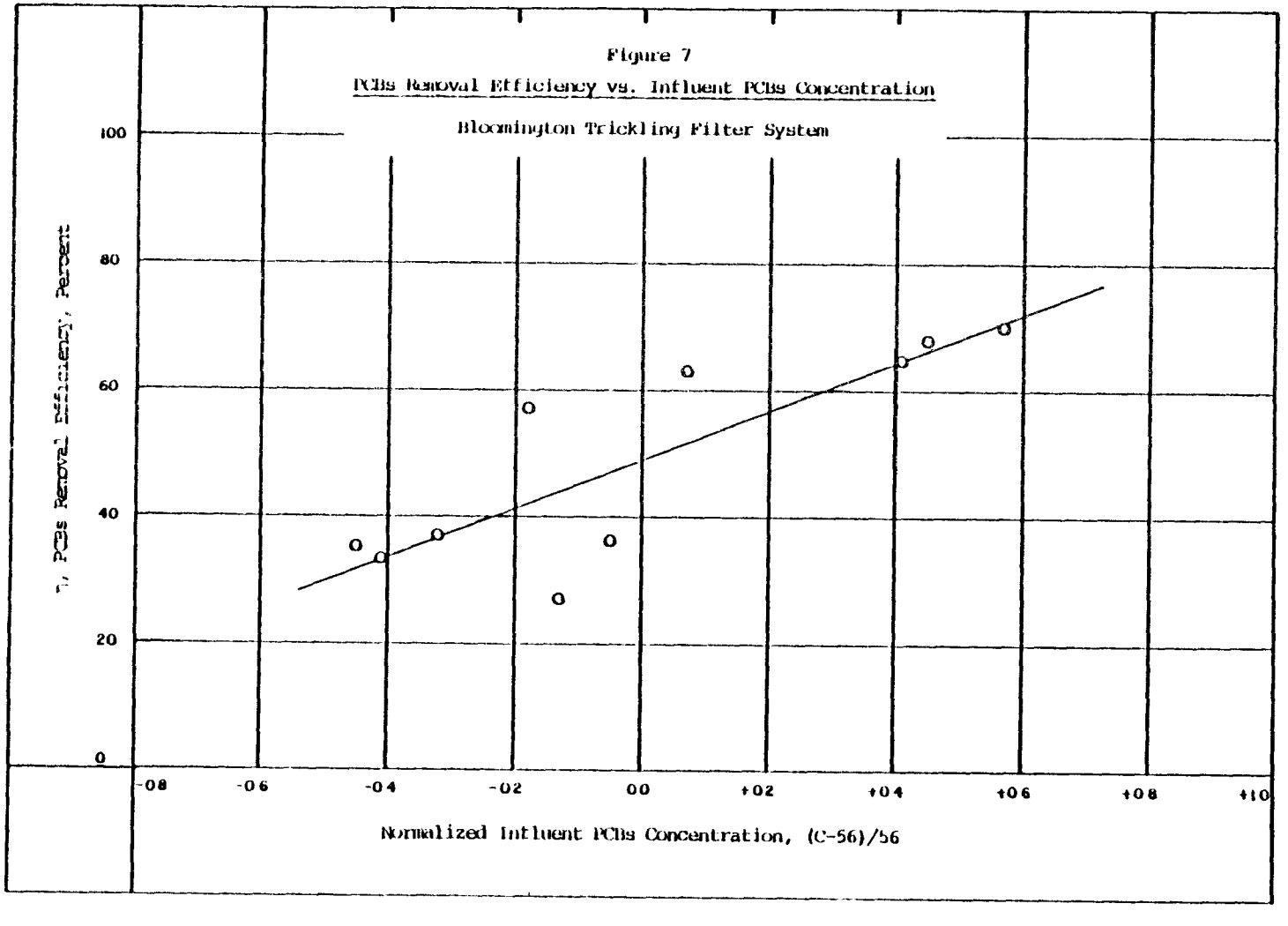
Figure 7
PCBs Removal Efficiency vs. Influent PCBs Concentration
Bloomington Trickling Filter System
% PCBs Removal Efficiency, Percent
100
80
60
40
20
0
-08
-06
-04
-02
00
+02
+04
+06
+08
+10
Normalized Influent PCBs Concentration, (C-56)/56

	Activated Sludge System	Trickling Filter System
PCBs Removal Efficiency, %	81.5	71.2
Predicted Std Deviation, %	6.0	9.2
Std Error of the Mean, %	2.2	3.5
2σ Confidence Interval, %	±4.5	±7.0

5.5 PCBs Removal in the Bloomington Final Lagoon

The day-to-day standard deviation of the final lagoon effluents (Table 10) is 39 percent, indicating that measurement uncertainties do not account for all of this variability. However, the detention time in the lagoon is too large for any effects of the lagoon influent variability (or of bypassed flows) to be seen at the effluent. The effects of wind or other factors are more likely to be important.

Based upon the mean PCBs concentrations of Table 10, the PCBs removal efficiency for the final lagoon is 31 percent. The efficiencies calculated from daily concentrations have a standard deviation about this mean of 22 percent. The standard error of the 10 - day mean is $22/\sqrt{10} = 7.0$ percent, and the two - sigma confidence interval around the mean removal efficiency is 31 ± 14 percent.

5.6 Correlation of Unit Process PCBs Removal Efficiencies

A summary of the PCBs removal efficiencies for the unit processes is as follows:

	η_{PCBs}, %	η_{SS}, %
Bloomington Primary System	53 ± 9	64
Bloomington Trickling Filter	49 ± 6	61
Bloomington Final Lagoon	31 ± 14	62
Baltimore Primary System	46 ± 13	29
Baltimore Activated Sludge	81.5 ± 4.5	93
Baltimore Trickling Filter	71.2 ± 7.0	77

Also listed above are the corresponding suspended solids removal efficiencies. The PCBs removal efficiency is plotted against the suspended solids removal efficiency in Figure 8. Points for four of the six unit processes fall very close to the straight line:

$$\eta_{PCBs} = 53.5 + 75 \frac{\eta_{ss} - 65}{65} .$$

According to this line, η_{PCBs} is somewhat lower than η_{ss}. This result is the expected one, since it is well known from prior studies (e.g., of pulp and paper wastewater treatment) that PCBs are adsorbed onto suspended solids. If the PCBs were uniformly distributed on the solids, then the model for PCBs removal would predict that the partition of PCBs between overflow and underflow in each solids-separation process (including the secondary clarifiers) would identically follow the solids partition; e.g., that $\eta_{PCBs} \equiv \eta_{ss}$. In practice, more PCBs become adsorbed onto the finer solids, which are more difficult to remove, so that $\eta_{PCBs} < \eta_{ss}$. However, the only way for η_{PCBs} to be greater than η_{ss} is for another removal mechanism to be effective. In the case of the Baltimore POTW primary system, where η_{PCBs} = 46 percent and η_{ss} = 29 percent, the only feasible alternate mechanism for PCBs removal is scum removal. Unfortunately, data are not available either for the PCBs concentration in the primary scum nor of the scum flow. The only related data are the following measurements of fats, oils, and greases (FOG):

Date	FOG, mg/l		FOG Removed, lbs/day
	Plant Influent	Primary Effluent	
10/14/76	76.0	56.0	33,600
10/17/76	39.1	14.5	38,300
10/18/76	22.2	11.2	17,800

Based upon these data, an average of 30,000 pounds per day of FOG are removed in the primary system. Some of this FOG would be adsorbed onto solids, and some would be in the primary scum.

Figure 8

PCBs vs. Suspended Solids Removal Efficiencies

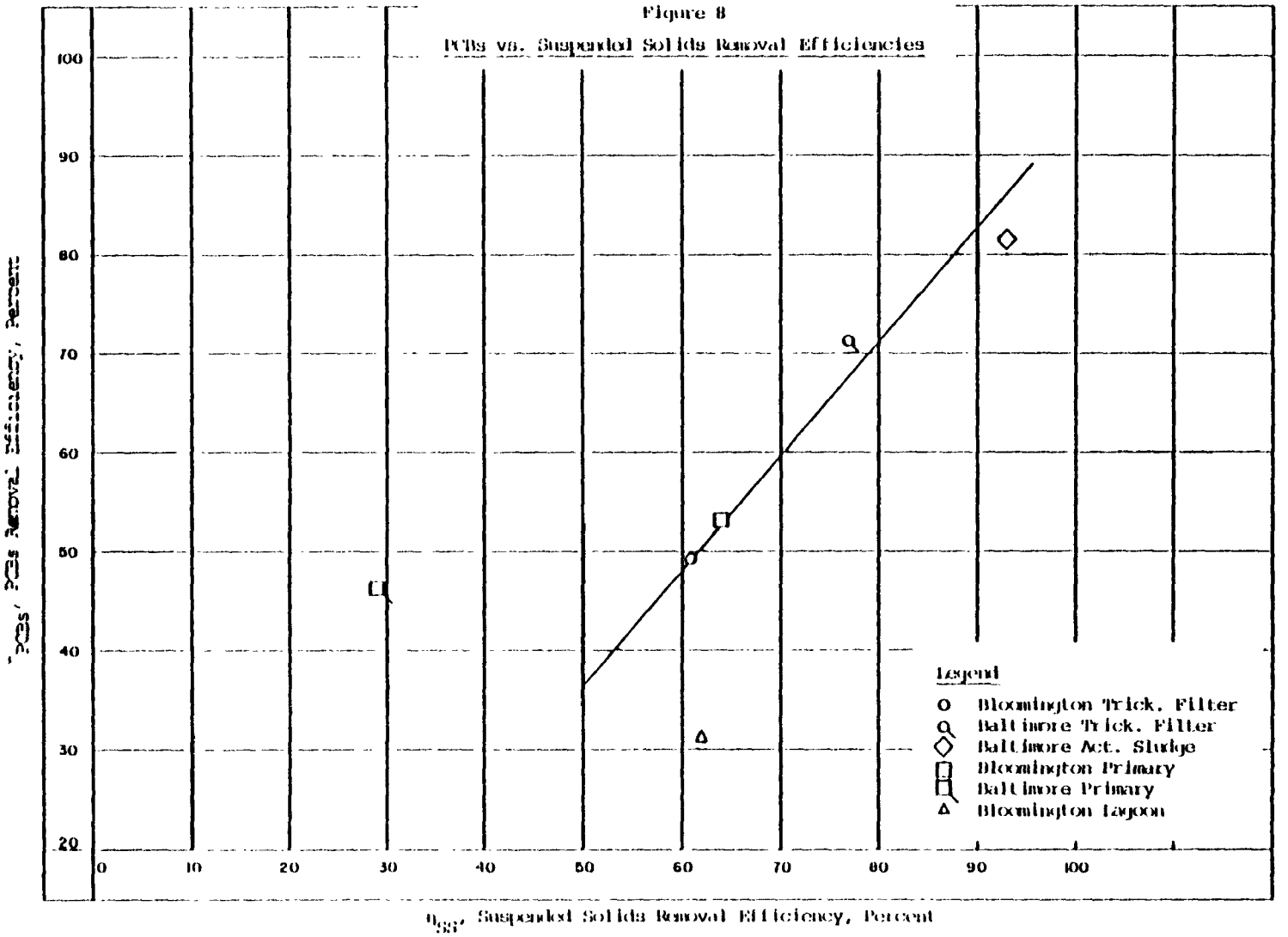

The other data point on Figure 8 not falling close to the correlation line is that for the Bloomington POTW final lagoon. The evidence that $\eta_{PCBs} < \eta_{ss}$ may be explained by a resuspension of PCB-laden fine solids via wind-induced turbulence, resulting in a lower apparent η_{PCBs}. The smallest particles, which would likely remain resuspended, would have a relatively large quantity of PCBs adsorbed because of the high specific surface area. However, these smallest particles would not as strongly affect the solids removal efficiency, which is on a weight basis rather than a surface area basis.

Moreover, much of the PCBs in the lagoon sediment, which may be re-suspended, reflects prior years of operation, when the waste load of PCBs to the POTW was higher, and when this waste load consisted of PCBs other than Aroclor 1016. Evidence of higher-chlorinated PCB isomers was found in the chromatograms for the lagoon sediment analyses.

With the above explanations, then, for the two unit processes not following the general correlation, the conclusion reached for the other four unit processes is that the removal of PCBs does closely follow the removal of suspended solids. It should be remembered, however, that day-to-day effects are also important - specifically the influent PCBs concentrations for both primary and secondary systems, and the influent BOD concentration for primary systems.

6.0 PCBs MATERIAL BALANCES

6.1 The Bloomington POTW

Since the sludge from the secondary clarifiers at the Bloomington POTW is returned to the head of the plant, the PCBs and the suspended solids that are removed from the wastewaters must be in either the primary sludge (Sampling Station BL-7) or in the lagoon sediment (Sampling Stations BL-10 through BL-15). The predicted ratio of PCBs to dry solids in these two locations may be derived by difference, from the average wastewater data of Tables 3 and 10:

	Primary Sludge	Lagoon Sediment
PCBs in Influent, μg/l	145	26
PCBs in Effluent, μg/l	56	18
PCBs Removed, μg/l	89	8
SS in Influent, mg/l	283	40
SS in Effluent, mg/l	102	15
SS Removed, mg/l	181	25
$\frac{\text{PCBs Removed}}{\text{SS Removed}}$, ppm dry weight	492	320

Two grab samples of raw primary sludge (Station BL-7) were taken, one on September 20, 1976, and the other on September 30, 1976. The results of the sludge analyses, in ppm PCBs (dry weight) were, respectively, 409 and 361. The experimental average of 385 ppm is 22 percent less than the predicted value of 492 ppm. The difference is of the same size as the measurement errors involved. Alternately, some of the PCBs removed in the primary system at the Bloomington POTW may have been in the removed scum rather than in the removed solids.

Six grab samples of lagoon sediment were taken on September 20, 1976, at different locations in the pond. The results of the sediment analyses, in ppm PCBs (dry weight) were:

BL-10	5,340
BL-11	1,410
BL-12	2,300
BL-13	1,360
BL-14	1,440
BL-15	2,680

The measurement average of 2,420 ppm is more than 7 times the predicted value of 320 ppm. One possible explanation of this discrepancy is that frequent by-passes of the secondary treatment system occur at Bloomington, resulting in primary effluent being pumped to the lagoon along with secondary effluent. Again using wastewater values from Tables 3 and 10, the predicted PCBs content of the lagoon sediment from bypassed flow is:

SS in lagoon influent SS in lagoon effluent SS removed in lagoon	102 mg/l 15 mg/l 87 mg/l
PCBs in lagoon influent PCBs in lagoon effluent PCBs removed in lagoon	56 µg/l 18 µg/l 38 µg/l
$\frac{\text{PCBs Removed}}{\text{SS Removed}}$	437 ppm dry weight

This predicted ratio of PCBs to suspended solids is also much lower than the experimental ratio for the lagoon sediment. Hence, the frequent bypass of the secondary treatment system cannot be responsible for this discrepancy.

A probable explanation for this discrepancy is the reasoning given in Section 5.6 - that the PCBs in the lagoon sediment are "old" PCBs reflecting prior years of POTW operation rather than current operation. A PCBs material balance around the lagoon is therefore complicated by the differences in PCB loadings of present-day influent and effluent vs. prior-day sediments.

An additional explanation is that the sediment solids degrade into gaseous and other end products over extended periods of time. As the quantity of solids decrease, with time, the ratio of PCBs to solids in the sediments increases.

Three additional grab samples were obtained at Bloomington. These were of primary sludge at several stages of digestion:

Sludge from First Digester in Series	735 ppm PCBs (dry wt.)
Sludge from Second Digester in Series	891 ppm PCBs (dry wt.)
Sludge from Final Digester in Series (BL-8)	674 ppm PCBs (dry wt.)

The average of 767 ppm PCBs (dry weight) in the digested sludge is twice the value obtained for raw sludge upstream of the digester (385 ppm). Two possible explanations are that:

1. The suspended solids content is reduced (by a typical 30 percent) via digestion of the volatile solids, thereby significantly increasing the PCBs content in the remaining digested sludge solids; and that
2. The higher PCB content of digested sludge may reflect a higher PCB content in older raw primary sludge (fed to the digester prior to the ten-day survey period). The residence time in these digesters may be in the order of 60 days.

Although plans were made for the digester gas to be sampled for PCBs (Station 9 in Figure 1), this sampling was not performed at the Bloomington POTW.

It is concluded that reasonable PCBs materials balances were obtained for the Bloomington POTW primary system and primary sludge processing.

6.2 The Baltimore POTW

6.2.1 Measurement of PCBs in Sludges

Single grab samples of sludges, collected at the Baltimore POTW, resulted in the following experimental data:

	Point 8 Humus Tank Sludge	Point 9 Act. Sludge (Settled Sludge)	Point 11 Thickened Sludge	Point 12 Digested Sludge
Solids Content of Sludge, Percent	0.24	0.69	4.39	3.26
PCBs, µg/l in wet sludge	32	46	680	815
PCBs, ppm dry weight of solids	13	7	16	25
Sludge Flow, mgd	0.893	12.74 (total) 0.944 (waste)	0.57	0.62
PCBs in Sludge, lbs/day	0.24	4.89 (total) 0.36 (waste)	3.23	4.21

6.2.2 Primary System

The average quantity of PCBs in the digester influent and effluent is 3.7 pounds per day. A PCBs balance around the sludge thickeners (just upstream of the digesters, see Figure 2 and Table 6) may be ~~estimated~~ made to derive the PCBs in the primary sludge:

	Flow, mgd	PCBs, µg/l	PCBs, lbs/day
Effluent from Thickeners:			
Thickened Sludge	0.60	750	3.7
Thickener Overflow	14.64	~ 8	1.0
Influent to Thickeners:			
Dilution Water	12.19	~ 3	0.3
Waste Activated Sludge	0.84	46	0.4
Primary Sludge	2.09	230	4.0

In comparison, the PCBs quantity removed from the 198.6 mgd of primary wastewater, at a concentration difference of 16.4 - 8.8 = 7.6 µg/l, would be 12.6 pounds per day, or three times the quantity estimated to be in the primary sludge. This finding is independently and qualitatively substantiated by the comparison of PCBs removal efficiency, 46 percent, with the suspended solids removal efficiency, 29 percent, which indicates an alternate mechanism (like scum removal) for removing PCBs in the primary system at the Baltimore POTW.

As shown previously, the PCBs/solids ratio measured for digested sludge (sampling station 12 in Figure 2) was higher than for the thickened sludge feed to the digester (sampling station 11). These results are consistent with a loss of solids in the digestion process, which typically is about 30 percent. A digester gas sample was collected (at point 13 in Figure 2), and subsequent analysis revealed no measurable PCBs in the digester gas.

6.2.3 Secondary Systems

In the secondary treatment processes at the Baltimore POTW, the following quantities of PCBs were removed from the wastewaters:

	Flow, mgd	PCBs Removed, µg/l	PCBs Removed, lbs/day
Activated Sludge System	42.8	7.2	2.6
Trickling Filter System	135.7	6.3	7.1

The comparable values derived from PCBs measurements of the secondary sludges were 0.36 pounds per day in the waste activated sludge and 0.24 pounds per day in the humus tank (trickling filter) sludge.

Two potential mechanisms for explaining the unaccounted-for PCBs in the secondary treatment systems at the Baltimore POTW are biodegradation and volatilization.

A pilot study of the activated sludge process was conducted by Tucker, Saeger, and Hicks, using several Aroclors[7]. Both biodegradation and volatilization rates were reported. The biodegradation rates were as follows:

PCB Mixture	Cl, %	Initial Conc, µg/l	48-hr Degradation, %	Degradation Rate, µg/l/hr
Aroclor 1221	21	667	81 ± 6	11.3 ± 0.8
MCS 1043	30	667	56 ± 16	7.8 ± 2.2
Aroclor 1016	41	667	33 ± 14	4.6 ± 1.9
Aroclor 1242	42	667	26 ± 16	3.6 ± 2.2
Aroclor 1254	54	667	15 ± 38	2.1 ± 5.3

The detention time of the wastewater in the aerators of the Baltimore POTW activated sludge units is 3.4 to 6.1 hours. At the Aroclor 1242 and 1254 degradation rates from the above pilot study, a PCBs concentration reduction of 7 to 22 µg/l might be expected. This is sufficient to account for <u>all</u> of the PCBs concentration reduction actually achieved across the activated sludge units, from 8.5 to 1.6 µg/l.

In this Tucker study, the 48-hour disappearance of PCBs, due to volatility, was 3.6 to 6.1 percent of the initial quantity, which was 667 μg/liter.[7] This vaporization rate was therefore 0.50 to 0.85 μg per hour per liter. Another batch activated sludge study, conducted by Kaneko, Morimoto, and Nambu, resulted in a vaporization rate of 3 percent per hour: 15 percent of the PCBs vaporized in 3 hours and 65 percent in 20 hours.[6] In this study the initial PCBs concentration was 10 μg/l, so that the vaporization loss was about 0.3 μg per hour per liter.

A mass balance model for PCBs in Lake Michigan resulted in the observation that evaporation and/or codistillation was a significant process by which PCBs are transferred to the atmosphere from aqueous solution.[5] The evaporation rate constant for Aroclor 1254 in aqueous solution at ambient temperature (298°K), where the vapor pressure of Aroclor 1254 is 7.7×10^{-5} mm Hg, was evaluated both from kinetic theory and from empirical Lake Michigan data as 2.5×10^{-11} lbs/hr/ft^2. Applying this rate constant to the Baltimore trickling filter, with a surface area of about 220×10^6 square feet, results in an evaporation rate of 40 pounds per hour. Hence, the 7.1 pounds per day (0.3 pounds per hour) of PCBs removed from the wastewater by the trickling filter process could evaporate to the atmosphere. A very large air/water interfacial area is also provided (by design) in the activated sludge units, for evaporation of PCBs to take place.

At the Baltimore POTW activated sludge units, the detention time of the wastewater in the aerators is 3.4 to 6.1 hours. At a vaporization rate of 0.5 μg per hour per liter (typical of the two pilot studies referenced above), a reduction in PCBs concentration of 2 to 3 μg/l might be expected. This is less than the experimentally-determined PCBs concentration reduction across the activated sludge units, from 8.8 to 1.6 μg/l; and is several times less than the expected rate of PCBs biodegradation.

7.0 EXPERIMENTAL STUDY OF PCBs VOLATILIZATION

The mechanisms of PCBs volatilization to the atmosphere, and of PCBs biodegradation, are potential ways to explain the disappearance of PCBs in the secondary treatment processes at the Baltimore POTW. It was important to explicitly determine the quantity (if any) of PCBs vaporized, as this mechanism results in direct re-release of PCBs to the environment rather than capture, disposal, or destruction. A two-part experimental program was carried out - first in the laboratory in a bench-scale aeration unit, and then in situ at an aeration basin at the Baltimore POTW.

7.1 Laboratory Experiments

The laboratory experiments were conducted with the same volume-specific air rate as in the Baltimore POTW aerators. At Baltimore, an average of 86.05 million cubic feet per day (2.44 million cubic meters per day or 3.59 million cubic feet per hour) were supplied to the aerators, which have a total volume of 1.38 million cubic feet. The volume-specific air rate used as a scaling parameter was then 3.59/1.38 or 2.60 volumes of air per hour per volume of mixed liquor.

The PCBs removed from the wastewaters at the Baltimore POTW activated sludge units were 7.2 lbs/day, of which 6.8 lbs/day (3,100 grams per day) were not accounted for by the PCBs in the secondary wasted sludge. If all of the missing PCBs had vaporized, the average PCBs concentration in the air would have been 3,100/2.44 = 1,260 micrograms per cubic meter, or 1.26 micrograms per liter of air.

Six laboratory experiments were conducted, with air (or nitrogen) sparged through a test liquor. The incoming gas was first passed over activated charcoal to ensure its purity. The exiting gas was passed through a train of two 100 ml ethylene glycol impingers for capture of PCBs. As a safety precaution, the final waste gas was passed through another activated charcoal trap. Upon completion of each experiment, the contents of the two impingers were combined

(together with washings from the sampling train) and analyzed. The test liquor for each experiment was also analyzed for PCBs after aeration. Initial PCBs analyses (prior to aeration) were conducted for Runs B-1 through B-4.

These samples were analyzed in a different manner from the previous wastewater samples. One liter of the test liquor was extracted with 500 ml petroleum ether rather than hexane-methylene chloride to remove the interfering peaks found in the earlier reagent blanks. The samples were then concentrated, placed on Florisil columns and eluted with 200 ml of 6 percent diethyl ether-petroleum ether and concentrated to 10 ml in iso-octane for injection into the electron capture gas chromatograph. The combined ethylene glycol contents of the two impingers were diluted with water, extracted with 50 ml petroleum ether and concentrated for injection.

Chromatographic conditions were modified from those used for the previous analysis of the water samples. The retention times were increased to provide better separation for the more volatile peaks and the sensitivity increased ten-fold.

The first series of laboratory runs, A-1 and A-2, were conducted using distilled water, spiked with 100 μg/l of Aroclor 1242, as the test liquor. For the other four experiments, B-1 through B-4, the test liquor was a synthesized mixed liquor made by adding return sludge to influent wastewater (e.g., primary effluent) in the 20.5/79.5 ratio which existed during the survey period at the Baltimore POTW. The return sludge and the influent wastewater were separately obtained from the Baltimore POTW at Stations 9 and 4 respectively (Figure 2). The return sludge was aerated at all times prior to the laboratory experiments.

Experiment No. B-1 was a direct simulation of the full-scale aeration basins. For Experiment No. B-2, the synthesized mixed liquor was spiked with an additional known quantity of Aroclor 1242 prior to aeration. Experiment B-3 and B-4 were similar (respectively) to Experiments B-1 and B-2, except that two steps were taken to prevent biodegradation as a competing mechanism (to vaporization) for PCBs disappearance. First, nitrogen was used instead of air as

sparging gas for Experiments B-3 and B-4. Second, the synthesized mixed liquors for these two experiments were autoclaved at 250°F and 15 psig for 20 minutes and cooled while sealed, prior to the evaporation experiments.

The conditions and results for the six experiments are in Table 14. For Run A-2 where distilled water, at 40°C, spiked with 100 μg/l of Aroclor 1242 was the test liquor, the vaporization rate was about 2.7 μg/hr per liter of liquor, or about 2.7 percent of the initial quantity per hour. The vaporization rate in Run A-1, where the test liquor was maintained at 9°C, was much lower - about 0.15 μg/hr/l or 0.15 percent per hour.

For Runs B-1 through B-4, where synthesized mixed liquor was used, the average vaporization rate was about 0.06 μg/hr per liter of liquor, about 0.4 percent of the initial quantity per hour, or about 0.023 μg per liter of gas. These rates are much lower than those obtained using water instead of synthesized mixed liquor, a result consistent with the premise that PCBs would adsorb onto solids, thereby inhibiting vaporization. However, these vaporization rates obtained from mixed liquor are also lower than the results of Kaneko[6] and Tucker[7] in batch activated sludge units.

Comparison between the runs using air and mixed liquor on the one hand, with those using nitrogen and autoclaved mixed liquor on the other hand, indicates that the vaporization rates are significantly lower when steps were taken to prevent biodegradation.

7.2 In-Situ Experiments at the Baltimore POTW

Having observed the vaporization of PCBs from activated sludge under laboratory conditions an air sampler for the activated sludge aeration basin was constructed. The sampler was designed to isolate a portion of the surface of the aeration basin by submerging a 12 inch diameter tube six inches below the surface to insure a liquid seal but not to inhibit liquid circulation. A diagram of the apparatus appears in Figure 9 with its placement in the aeration basin. Air was drawn into the impinger train through a funnel with a diameter of 8-3/4 inches placed four inches above the mixed liquor level in the aerator.

Table 14

Laboratory Vaporization Runs

	Run Number					
	A-1	A-2	B-1	B-2	B-3	B-4
Test Liquor:						
Total Volume Prepared, ml	600	600	4,000	4,000	4,000	4,000
Distilled Water, % by vol.	100	100				
Settled Wastewater, % by vol.			79.5	79.5	79.5	79.5
Return Sludge, % by vol.			20.5	20.5	20.5	20.5
Aroclor 1242 Added, µg	60	60		400		400
Temperature of Liquor, °C	9	40	16	16	16	16
Liquor Autoclaved?	No	No	No	No	Yes	Yes
Liquor Withdrawn for Analysis, ml	0	0	1,000	1,000	1,000	1,000
Liquor Aerated, ml	600	600	3,000	3,000	3,000	3,000
Aroclor 1242 in Liquor Aerated, µg	60	60		300		300
Gas Sparged:						
Gas Used	Air	Air	Air	Air	N_2	N_2
Flow, liters/hour	1.56	1.56	7.80	7.80	7.80	7.80
Duration, hours	6.0	6.0	6.0	6.0	6.0	6.0
Total Flow, liters	9.36	9.36	46.8	46.8	46.8	46.8
PCBs Quantities, µg:						
Test Liquor Prior to Aeration	(60)	(60)	16.8	172.8	10.2	302.4
Test Liquor After Aeration	57.0	22.8	22.2	127.2	13.2	302.6
Impingers	0.53	9.55	0.68	2.4	0.33	0.83
Unaccounted for	2.5	32.4	~0	43.2	~0	~0
PCBs Vaporization Rate:						
µg/hour	0.088	1.59	0.113	0.400	0.055	0.139
µg/liter liquor/hr	0.147	2.65	0.038	0.133	0.018	0.047
µg/liter of gas	0.057	1.02	0.015	0.051	0.007	0.018
Percent of Initial Quantity/hr	0.15	2.7	0.67	0.23	0.54	0.046
Unaccounted for PCBs:						
µg/hour	0.42	5.4	~0	7.2	~0	~0
µg/liter liquor/hour	0.7	9.0	~0	2.4	~0	~0
Percent of Initial Quantity/hr	0.7	15.0	~0	4.2	~0	~0

FIGURE 9, IN-SITU SAMPLER

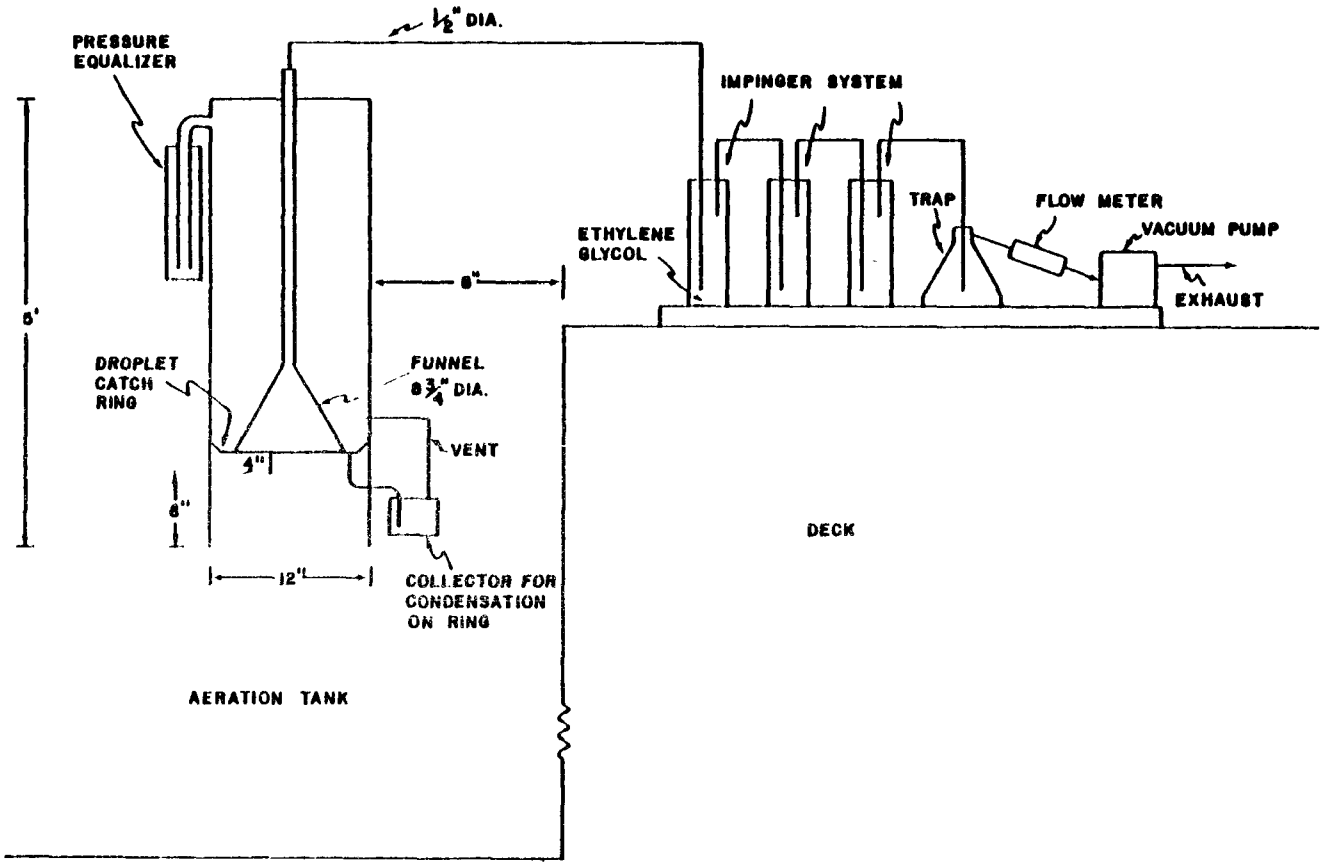

A ring was positioned under the funnel, draining into a metal can, to catch any condensate and entrained droplets. The air flowrate through the impinger train was maintained at 10 SCFH (283 liters per hour). Since the total air flow at Baltimore in aeration tanks 3 and 4 was about 1,500,000 SCFH (42,500,000 liters per hour, and the total surface area of these basins is 37,000 square feet, the average air emission rate was 1,150 liters per hour per square foot of surface. The 12-inch diameter collection tube isolated 0.785 square feet of surface, so that about 900 liters per hour of air were emitted through the collector. The excess air (900 - 283 or about 600 liters per hour) was released through a side vent through a water seal of 2 inches depth.

However, the air at the Baltimore POTW is sparged from a header along one side of each aeration basin, and there is a visually apparent gradient of air emission across the 24-foot basin surface. The collector tube was situated close to the sidewall at the same side as the air header, so that the actual air captured was greater than the overall average.

The collector was positioned at the head of one aeration tank, 27.5 feet downstream from the mixing of influent wastewater and return sludge. The total length of each tank (consisting of two basins) is 672 feet.

The impinger train consisted of three impingers in series, each containing 100 ml of ethylene glycol. After each run, the funnel and all tubing in the train was washed, and combined with the impinger contents and with the contents of the metal can (which turned out to be negligible). The PCBs analysis was conducted in the same manner as in the preceding laboratory experiments.

Two runs were made at the Baltimore POTW, on February 23 and 25, 1977. PCBs in the impinger train were identified, and the quantitative results (which show excellent agreement between the two runs) are as follows:

	7/23/77	2/25/77
Run duration, hours	3.5	6.0
Air flow through train, l/hr	283	283
Total air through train, liters	990	1,700
PCBs collected, µg	0.68	1.17
PCBs, µg/hr	0.194	0.195
PCBs, µg/liter air	0.00069	0.00069

The PCBs collected per liter of air, 0.0007 µg, is one-twentieth the quantity in the laboratory experiment (0.015 µg in Run B-1) simulating the POTW aerators.

During these runs, liquid samples were also collected at several stations around the activated sludge units. Three samples (each 220 ml) were collected at each station and composited on February 23rd, and four samples (each 220 ml) were collected at each station and composited on February 25th. The results of analyses for PCBs (in µg/l) are in Table 15, along with plant operating flows for these periods and derived PCBs quantities. During these runs, aeration basins (and clarifiers) 1 and 2 were out of service, and the sludge recycle ratio was much higher than in the previous survey period.

During the February 25th run, mixed liquor samples were collected at the head of an aeration tank (near the air collector), at the mid-point along the tank length (at the end of the first basin of two in series), and at the tail of the second basin. The flow in the tanks approximate plug flow, so that appreciable loss of PCBs via <u>any</u> mechanism should result in a PCB concentration decline along the tank length. The data in Table 15 indicate no apparent decline.

The quantities of PCBs (Table 15) in the system illustrate the fact that the system has a large capacitance for PCBs. As the return sludge is recirculated, about 3 pounds per day of PCBs are recirculated. In comparison, the PCBs in the influent wastewater amounted to less than 0.2 pounds per day during these runs. Since the PCBs concentrations in the influent wastewater

Table 15

Baltimore POTW Activated Sludge System, 2/77

(Aeration Basins #3 and #4)

	2/23/77 12:15-3:45 p.m.	2/25/77 9:30 a.m.-3:30 p.m.
Flow Rates:		
Influent Wastewater, mgd	19.1	18.9
Total Sludge, mgd	10.1	9.7
Return Sludge, mgd	8.7	9.1
Waste Sludge, mgd	1.1	0.9
Mixed Liquor, mgd	27.8	28.0
Air Flow, million SCFH	1.49	1.43
PCBs Concentration, µg/l		
Influent Wastewater	0.61	1.25
Effluent from Secondary Clarifier	0.25	1.48
Secondary Sludge	42.9	29.5
Mixed Liquor: Head	22.0	19.1
Mid-Point	—	16.6
End	—	21.0
Average	22.0	18.9
PCBs Quantity, lbs/day		
Influent Wastewater	0.097	0.197
Effluent from Clarifier	0.040	0.234
Waste Sludge	0.392	0.222
Return Sludge	3.10	2.24
Mixed Liquor to Clarifiers	5.10	4.41

was very low for these few hours (0.8 to 1.3 μg/l) compared to the average 8.8 μg/l measured in the previous 8-day survey period, the secondary clarifier effluent contained PCBs attributable not to the PCBs influent during these few hours but to the PCBs accumulated previously in the recirculating mixed liquor. Hence, while PCBs removal efficiencies during these time periods, calculated from influent and effluent concentrations, were 59 and -18 percent; the PCBs removal efficiencies for the secondary clarifier were 99 and 95 percent (based upon mixed liquor and effluent PCBs quantities).

7.3 Conclusions

The quantities of PCBs in the air emitted from the liquid surface were determined to be 0.00069 μg per liter of air from the in-situ measurements. Since the total air flow at the plant was 1.46×10^6 SCFH, or 990×10^6 liters per day; the equivalent quantity of PCBs vaporized is 0.68 grams per day, or 0.0015 pounds per day. Even at the higher vaporization rate found in the laboratory Experiment B-1 (0.015 μg/liter air), the equivalent quantity of PCBs vaporized would be 0.033 pounds per day. Either of these quantities is a small fraction of the quantity of PCBs in recirculation in the mixed liquor (3 lbs/day), and is also a very small fraction of the quantities unaccounted-for during the previous 8-day survey (6.8 lbs/day). It is therefore concluded that vaporization of PCBs is not an important mechanism for removal of PCBs from wastewaters in activated sludge systems (and by analogy in trickling filter systems).

The circumstantial evidence, therefore, points to biodegradation as the predominant mechanism for PCBs destruction in secondary systems. However, no direct measurement was made at the Baltimore POTW to explicitly determine biodegradation rate. A comparison of laboratory experiments B-2 and B-4 indicates that in the former experiment, where biodegradation might have occurred, indeed 25 percent of the initial PCBs were removed other than by volatilization. In experiment B-4, where biodegradation was specifically inhibited, no significant quantities of the PCBs disappeared.

The Aroclor 1242 disappearance rate in experiment B-2 was 2.4 ug/l/hr; results entirely consistent with those of Tucker et al., which were 3.6 ug/l/hr, for Aroclor 1242.[7] If the expected initial Aroclor 1242 concentration (from the quantity added) of 300 ug/l is used rather than the measured 172.8 ug/l, the disappearance rate for experiment B-2 is 9.5 ug/l. As stated in Section 6.2.3, these PCBs biodegradation rates (from laboratory and pilot studies) are sufficient to account for the PCBs concentration reduction achieved across the secondary treatment processes at the Baltimore POTW.

These results indicate that biodegradation of PCBs may occur in secondary treatment processes in POTWs. Until biodegradation is xplicitly determined, such as by using C_{14}-labeled PCBs, as opposed to a hypothesis based upon disappearance, the mechanism for disappearance must remain an open question.

REFERENCES

1. U.S. Environmental Protection Agency, Technology Transfer, Process Design Manual for Upgrading Existing Wastewater Treatment Plants, October 1974.

2. U.S. Environmental Protection Agency, Office of Water Programs, Procedures for Evaluating Performance of Wastewater Treatment Plants (Contract 68-01-0107).

3. U.S. Environmental Protection Agency, Technology Transfer, Process Design Manual for Sludge Treatment and Disposal, EPA 625/1-74-006, October 1974.

4. Fair, G.M., J.C. Geyer, and D.A. Okun, Elements of Water Supply and Wastewater Disposal, 2nd ed., Wiley, N.Y. (1971).

5. Mass Balance Model for PCB Distribution, in PCBs in the United States: Industrial Use and Environmental Distribution, Versar Inc., Final Report, Task I, EPA Contract No. 68-01-3259 (February 25, 1976).

6. Kaneko, M., K. Morimoto, and S. Nambu, The Response of Activated Sludge to a Polychlorinted Biphenyl (KC-500), Water Research 10, 157-163 (1976).

7. Tucker, E.S., V.W. Saeger, and O. Hicks, Activated Sludge Primary Biodegredation of Polychlorinated Biphenyls, Bull. Environmental Contamination and Toxicology 14, 6, 705-713 (1975).

8. Dube, D.J., G.D. Veith, and G. F. Lee, Polychlorinated Biphenyls in Treatment Plant Effluents, J.W.P.C.F. 46, 5, 966-972 (May 1974).

9. Choi, P.S.K., H. Nack, and J.E. Flinn, Distribution of Polychlorinated Biphenyls in an Aerated Biological Oxidation Wastewater Treatment System, Bull. Environmental Contamination & Toxicology 11, 1, 12-17 (1974).

BIBLIOGRAPHIC DATA SHEET	1. Report No. EPA440/5-77-017	2.	3. Recipient's Accession No.
4. Title and Subtitle PCBs Removal in Publicly-Owned Treatment Works			5. Report Date April 19, 1977 6.
7. Author(s) Donald H. Sargent, Roderick A. Carr and Gregory A. Vogel			8. Performing Organization Rept. No.
9. Performing Organization Name and Address Versar Inc. 6621 Electronic Drive Springfield, Virginia 22151			10. Project/Task/Work Unit No. Task 13 11. Contract/Grant No. 68-01-3273
12. Sponsoring Organization Name and Address U.S. Environmental Protection Agency Criteria and Standards Division Washington, D.C. 20460			13. Type of Report & Period Covered Final Report 14.

15. Supplementary Notes

16. Abstracts

The removal of PCBs in each major unit process of publicly-owned sewage treatment works (POTWs) was quantified so that the removal efficiency results may be applied to other POTWs. Two POTWs, differing widely in size and in influent PCBs loading, were each sampled on a 24-hour basis for 7 to 10 days.

The overall PCBs removal efficiencies achieved were 83 to 89 percent, slightly lower than the suspended solids removal efficiencies achieved at the two plants. The steady-state PCBs removal efficiency of each unit process was strongly correlated to the corresponding suspended solids removal efficiency. In addition, large day-to-day variations in unit process PCBs removal efficiencies were correlated to variations about the mean influent PCBs and BOD concentrations.

Although reasonable PCBs material balances were achieved for one of the two plants, PCBs removed from the wastewaters of the other plant could not be accounted for in the sludges. PCBs loss by volatilization from the secondary treatment processes was discounted as an important mechanism, the result of explicitly analyzing the air emitted from the activated sludge aeration tanks. The quantities volatilized were very small fractions of the PCBs removed from the wastewaters.

17. Key Words and Document Analysis. 17a. Descriptors

Polychlorinated Biphenyls (PCBs)
Municipal Sewage Treatment Plants
Primary Sedimentation
Trickling Filters
Activated Sludge
Gas Chromatographic Analysis
Volatilization
Biodegradation

17b. Identifiers/Open-Ended Terms

17c. COSATI Field/Group

18. Availability Statement	19. Security Class (This Report)	21. No. of Pages
Release Unlimited	UNCLASSIFIED	85
	20. Security Class (This Page) UNCLASSIFIED	22. Price